For Training Use

Only

C-141 Handbook

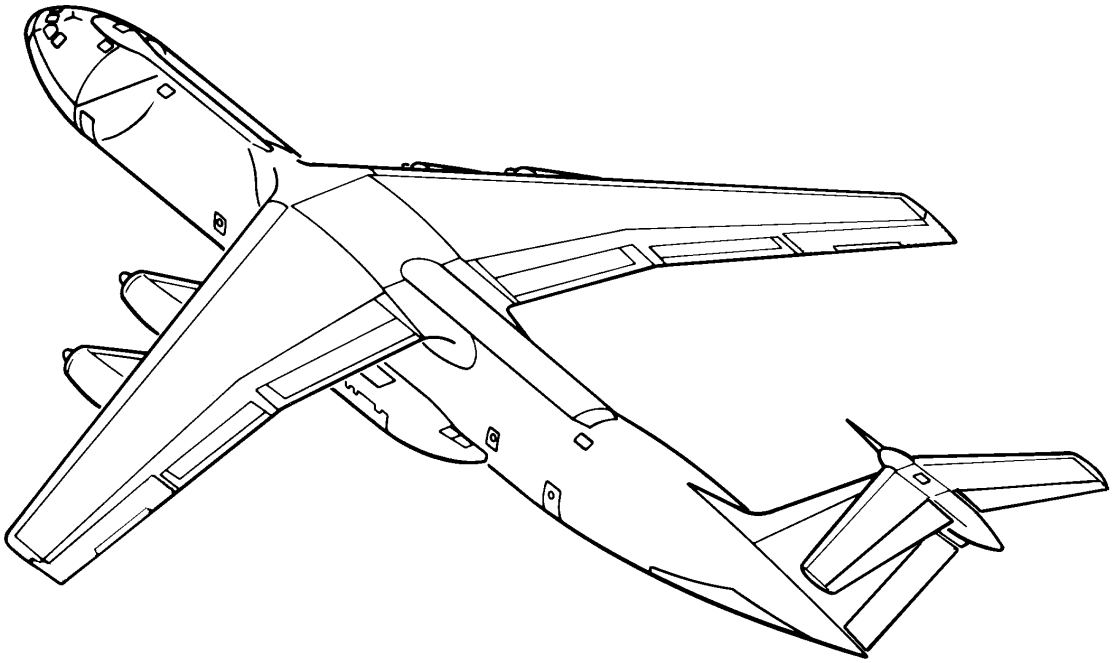

For Training Use Only

INTRODUCTION

This handbook has been produced as a training aid, it has the distinct advantage of having a lot of general knowledge information, you may need, in one book. It is intended to help you, as a quick reference, to find a particular principle dimension, station number, access panel, component location/identification, etc. The pressure readings and limitations are subject to change, and are used only to provide general parameters. Use it whenever it can be helpful to you, and mark it to meet your own particular needs.

Its only purpose is to give you a quick reference, as far as systems operations and functions. **This handbook is not tech data**, and will not be used as such. Nor can it be used as a reference for accomplishing a task. If you use it for the purpose of becoming more familiar with the aircraft and systems, it will have served its purpose.

When setting up the chapters in this book, we tried to number the pages to correspond as closely as possible to the technical order (T.O.) numbers. For example, in the power plant chapter (71-1), the material was taken from the -71 series T.O.s, therefore the chapter and corresponding pages were numbered accordingly. This is the rule of thumb we used to develop most chapters, however, this may not be the case in every chapter.

THIS HANDBOOK IS NOT TECHNICAL DATA.

PRESSURES, READINGS, AND LIMITATIONS ARE SUBJECT TO CHANGE AND ARE ONLY USED IN THIS BOOK TO PROVIDE GENERAL PARAMETERS.

TABLE OF CONTENTS

INTRODUCTION . . . . . **i**

TABLE OF CONTENTS . . . . . **iii**

C-141B TECHNICAL ORDERS . . . . . **xi**

MISCELLANEOUS REFERENCES AND TECHNICAL ORDERS . . . . . **xxxiii**

AIRCRAFT GENERAL **1-1**

TIME LIMITS/MAINTENANCE CHECKS **5-1**

DIMENSIONS AND AREAS **6-1**

Aircraft Dimensions (general) 6-2

Aircraft Stations 6-3

Aircraft Wing and Engine Stations 6-6

Aircraft Empennage Stations 6-7

Aircraft Access and Inspection Provisions (Overview) 6-8

Aircraft Access and Inspection Provisions (Detailed) 6-12

Aircraft Interior Arrangement 6-21

Aircraft Exterior Walkways and No-Step Areas 6-23

LIFTING AND SHORING **7-1**

Jacking Points and Adapters 7-2

Axle Jacks 7-4

Wing, Fuselage, Stabilization Jacks and Cradling 7-7

Nose Ballast Weights and Jack Manifolding 7-12

LEVELING AND WEIGHING **8-1**

AIRCRAFT TOWING **9-1**

Towing Precautions 9-1

Towing Instructions (Bridle Towing) 9-3

PARKING AND MOORING **10-1**

Parking Instructions 10-1

Mooring Instructions 10-4

SERVICING 12-1

General Servicing Precautions 12-1

Oxygen System Servicing Safety Precautions 12-1

Power Plant and Auxiliary Power Unit Fire Extinguisher Systems Servicing . 12-3

Halon 1211 Portable Fire Extinguisher Servicing 12-3

Main and Nose Landing Gear Tire Servicing 12-3

Fuel System Servicing Procedures and Safety Precautions 12-4

Draining Condensate From Fuel Tanks 12-7

Crew Galley Servicing 12-7

AIR CONDITIONING (A/C) SYSTEM 21-1

Bleed Air Subsytem 21-3

Equipment Cooling Subsystem 21-11

Pressurization Subsystem 21-13

Heating and Cooling Subsystem 21-19

Temperature Control Subsystem 21-29

AUTOMATIC FLIGHT CONTROL SYSTEM (AFCS) 22-1

Autopilot (A/P) and Yaw Damper (Y/D) System 22-6

Automatic Throttle System (ATS) 22-12

All Weather Landing System (AWLS) 22-15

COMMUNICATION SYSTEM 23-1

High Frequency (HF) Radio Systems 23-2

Very High Frequency (VHF) Radio Systems 23-11

Multiple Radio Transmit Installation 23-17

Ultra High Frequency (UHF) Radio Systems 23-19

Interphone and Public Address (PA) Systems 23-26

Static Discharging System 23-36

Joint Airborne Communication Center/Command Post (JACC/CP) 23-37

ELECTRICAL SYSTEM 24-1

Generator Drive System 24-2

Alternating Current (AC) Generation System 24-18
Direct Current (DC) Generation System 24-54
External Power System 24-61
Emergency Generation System 24-67
EQUIPMENT AND FURNISHINGS 25-1
Flight Station Equipment 25-2
Galley 25-8
Lavatory 25-9
Cargo Compartment Equipment (Floor and Walkways) 25-10
Emergency Equipment 25-17
Aerial Delivery System (ADS) and Related Components 25-22
Special Missions Equipment 25-30
FIRE PROTECTION SYSTEM 26-1
Detection and Warning Systems 26-1
Fire Extinguishing Systems 26-12
FLIGHT CONTROL SYSTEM 27-1
Aileron Subsystem 27-5
Rudder Subsystem 27-12
Elevator Subsystem 27-18
Pitch Trim Subsystem 27-32
Flaps Subsystem 27-38
Spoilers Subsystem 27-48
FUEL SYSTEM 28-1
Storage Subsystem 28-1
Distribution Subsystem 28-11
Jettison Subsystem 28-32
Indication and Warning Subsystem 28-36
HYDRAULIC POWER SYSTEMS 29-1
Hydraulic System No. 1 29-2

Hydraulic System No.2 29-8
Hydraulic System No.3 29-15
ICE AND RAIN PROTECTION SYSTEM 30-1
Wing Anti-Ice and Empennage De-Ice Subsystem 30-1
Pitot-Static Tubes Anti-Ice Subsystem 30-7
Windshield Anti-Ice and Rain Removal Subsystem 30-8
Ice Detection Subsystem 30-17
Engine Pressure Ratio (EPR) Probe Anti-Ice Subsystem 30-19
INDICATING AND RECORDING SYSTEM 31-1
Cockpit Voice Recorder (CVR) System 31-4
Digital Flight Data Recorder (DFDR) System 31-9
Life History Recorder System (LHRS) 31-14
Takeoff Warning System 31-20
LANDING GEAR SYSTEM 32-1
Main Landing Gear (MLG) and Doors Subsystem 32-7
Nose Landing Gear (NLG) and Doors Subsystem 32-14
Extension and Retraction Subsystem 32-19
Main Landing Gear (MLG) Brakes and Anti-Skid Subsystem 32-31
Nose Landing Gear (NLG) Steering Subsystem 32-40
Landing Gear Position and Warning Subsystem 32-46
LIGHTING SYSTEM 33-1
Flight Station Lighting Subsystem 33-1
Cargo and Service Compartment Lighting Subsystem 33-6
Exterior Lighting Subsystem 33-15
Emergency Lighting Subsystem 33-18
NAVIGATION SYSTEM 34-1
Pitot-Static System 34-1
Central Air Data Computer (CADC) System 34-6
Total Air Temperature (TAT) System 34-11

Radar Altimeter System 34-13
Attitude and Heading Reference System (AHRS) 34-17
Flight Director System 34-23
Glideslope (G/S) System 34-39
Marker Beacon System 34-43
Identification Friend or Foe (IFF) System 34-47
Weather Radar System 34-53
Ground Proximity Warning System (GPWS) 34-66
Inertial Navigation System (INS) 34-69
Automatic Direction Finder (ADF) System 34-86
Very High Frequency (VHF) Navigation System 34-91
Tactical Air Navigation (TACAN) System 34-104
Intraformation Positioning System (SKE) 34-112
Fuel Savings Advisory System (FSAS) 34-122
Standby Attitude Indicator (AI) 34-132
OXYGEN SYSTEM 35-1
Crew Oxygen System 35-4
Troop Oxygen System 35-13
Portable Oxygen Bottles 35-19
AUXILIARY POWER UNIT (APU) SYSTEM 49-1
Engine Subsystem 49-1
Engine Fuel Control Subsystem 49-6
Starting/Ignition Subsystem 49-11
Bleed Air Subsystem 49-15
Control Subsystem 49-17
Oil Subsystem 49-19
STRUCTURES 51-1
STRUCTURAL DOORS SYSTEM 52-1
Crew and Troop Doors Subsystem 52-1

Emergency Exits Subsystem 52-4
Cargo Doors Subsystem 52-11
Interior Doors Subsystem 52-33
Door Warning Subsystem 52-34
WINDOWS 56-1
Windshield Inspection 56-1
Windshield Heating System 56-2
STANDARD PRACTICES (ENGINE) 70-1
POWER PLANT (GENERAL) 71-1
ENGINE FUEL AND IGNITION SYSTEM 73-1
Fuel System 73-2
Ignition System 73-8
ENGINE AIR SYSTEM 75-1
System Operation 75-1
ENGINE CONTROLS SYSTEM 76-1
Controls System Operation 76-1
ENGINE INSTRUMENT SYSTEM 77-1
Engine System Operation 77-1
Engine Indicators 77-1
Engine Data Converter (EDC) 77-3
Engine Pressure Ratio (EPR) System 77-4
Revolutions Per Minute (RPM) System 77-7
Exhaust Gas Temperature (EGT) System 77-8
Engine Vibration Indicating (EVI) System 77-9
ENGINE EXHAUST SYSTEM 78-1
Exhaust System Operation 78-1
Thrust Reverser (TR) System Components 78-2
Thrust Reverser (TR) Operation 78-2
ENGINE OIL SYSTEM 79-1

Oil System Operation 79-1
Oil System Pressure Components 79-2
Oil System Scavenge Components 79-3
Oil Breather System 79-4
Oil System Indication Components 79-4
ENGINE STARTING SYSTEM 80-1
Starting System Components and Operation 80-1
GLOSSARY OF ABBREVIATIONS/ACRONYMS A-1

NOTES

C-141B TECHNICAL ORDERS

T.O. NUMBER	T.O. TITLE
1C-141B-01	List of Applicable Publications
1C-141B-06	Aircraft Maintenance - Work Unit Code Manual
1C-141B-1	Flight Manual
1C-141B-1-1	Flight Manual - Appendix 1 - Performance Data
1C-141B-1CL-1	Pilot’s, Flight Crew Checklist
1C-141B-1CL-1-1	Pilot’s, Scroll Checklist
1C-141B-1CL-2	Flight Engineer’s, Flight Crew Checklist
1C-141B-1CL-2-1	Flight Engineer’s, Scroll Checklist
1C-141B-1CL-3	Navigator’s, Flight Crew Checklist
1C-141B-1CL-4	Loadmaster’s, Flight Crew Checklist
1C-141B-1CL-5	Scanner’s, Flight Crew Checklist
1C-141B-1CL-6	Medical Crew Director/Flight Nurses/Medical Technicians, Flight Crew Checklist
1C-141B-2-1	Cross Servicing Guide
1C-141B-2-3JG-1	Organizational Maintenance - Job Guide - Pneudraulic, Hydraulic Systems No.1 and No.2
1C-141B-2-3JG-3-1	Organizational Maintenance - Job Guide - Pneudraulics, Flight Controls, and Anti-Icing System (Vol 1)
1C-141B-2-4JG-2	Organizational Maintenance - Job Guide Power Plant, Engine
1C-141B-2-4JG-3	Organizational Maintenance - Job Guide - Power Plant, Engine Oil, and Compressor Bleed Air System
1C-141B-2-4JG-8	Organizational Maintenance - Job Guide - Power Plant, Auxiliary Power Unit (APU)
1C-141B-2-7JG-2	Organizational Maintenance - Job Guide - Electrical System, Landing Gear System

T.O. NUMBER	T.O. TITLE
1C-141B-2-7JG-3	Organizational Maintenance - Job Guide - Electric System, Brakes, Flight Controls, and Engine Systems
1C-141B-2-7TS-1	Troubleshooting - Electrical
1C-141B-2-8JG-3	Organizational Maintenance - Job Guide - Navigational System
1C-141B-2-00FR-00-1	Organizational Maintenance - Fault Reporting
1C-141B-2-00GE-00-1	Organizational Maintenance - General Equipment
1C-141B-2-00JG-00-1	Organizational Maintenance - Job Guide - Index
1C-141B-2-05JG-00-1	Organizational Maintenance - Job Guide - Ground Handling, General Maintenance
1C-141B-2-07JG-00-1	Organizational Maintenance - Job Guide - Ground Handling, Jacking
1C-141B-2-08JG-00-1	Organizational Maintenance - Job Guide - Ground Handling, Leveling, and Weighing
1C-141B-2-09JG-00-1	Organizational Maintenance - Job Guide - Ground Handling, Towing
1C-141B-2-10JG-00-1	Organizational Maintenance - Job Guide - Ground Handling, Parking, and Mooring
1C-141B-2-11WD-1-1	Organizational Maintenance - Aircraft Wiring Diagrams
1C-141B-2-11WD-1-2	Organizational Maintenance - Aircraft Wiring Diagrams
SERVICING	
1C-141B-2-12JG-10-1	Organizational Maintenance - Job Guide - Ground Handling, Servicing
1C-141B-2-12JG-10-2	Organizational Maintenance - Job Guide - Concurrent Servicing and Ground Handling, Quick Turn
1C-141B-2-12JG-20-1	Organizational Maintenance - Job Guide - Ground Handling, Lubrication

T.O. NUMBER	T.O. TITLE
AIR CONDITIONING	
1C-141B-2-21FI-00-1	Organizational Maintenance - Fault Isolation - Air Conditioning System Equipment Cooling, Bleed Air and Pressurization, Fault Codes: 2100A01, 2100A02, 2100001 through 2100999, 2110A01, 2110A02, 2110001 through 2110999, 2130A01, and 2130001 through 2130999
1C-141B-2-21FI-00-2	Organizational Maintenance - Fault Isolation - Air Conditioning System, Floor Heat and Temperature, and Flow Control, Fault Codes: 2150A01, 2150A02, 2150001 through 2150999, 2160A01, and 2160001 through 2160999
1C-141B-2-21GS-00-1	Organizational Maintenance - General System - Air Conditioning System
1C-141B-2-21JG-00-1	Organizational Maintenance - Job Guide - Air Conditioning, General Maintenance
1C-141B-2-21JG-10-1	Organizational Maintenance - Job Guide - Air Conditioning Bleed Air
1C-141B-2-21JG-10-2	Organizational Maintenance - Job Guide - Air Conditioning Bleed Air
1C-141B-2-21JG-30-1	Organizational Maintenance - Job Guide - Air Conditioning Pressurization
1C-141B-2-21JG-50-1	Organizational Maintenance - Job Guide - Air Conditioning Heating and Cooling
1C-141B-2-21JG-60-1	Organizational Maintenance - Job Guide - Air Conditioning Temperature Control
AUTO FLIGHT	
1C-141B-2-22FI -00-1-1	Organizational Maintenance - Fault Isolation - Automatic Flight Control System (AFCS) Yaw Damper, Fault Codes: 2210001 through 2210199, and 2210Y01

T.O. NUMBER	T.O. TITLE
1C-141B-2-22FI-00-1-2	Organizational Maintenance - Fault Isolation - Automatic Flight Control System (AFCS) - Basic and Extended Autopilot (A/P), Fault Codes: 2210201 through 2210999, 2210A01, 2210B01, 2210C01, 2210L01, 2210M01, 2210N01, 2210P01, and 2210S01
1C-141B-2-22FI-00-2	Organizational Maintenance - Fault Isolation - Automatic Flight Control System (AFCS) - Auto Throttle System (ATS), Fault Codes: 2230001 through 2230999, and 2230A01
1C-141B-2-22FI-00-3	Organizational Maintenance - Fault Isolation - Automatic Flight Control System (AFCS) - All Weather Landing System (AWLS), Fault Codes: 2250001 through 2250999, and 2250A01
1C-141B-2-22GS-00-1	Organizational Maintenance - General System - Automatic Flight Control System (AFCS)
1C-141B-2-22JG-10-1	Organizational Maintenance - Job Guide - Automatic Flight Control System (AFCS), General Information, Yaw Damper (Y/D), and Autopilot (A/P) - C-141A/C-141B Aircraft
1C-141B-2-22JG-20-1	Organizational Maintenance - Job Guide - Automatic Flight Control System (AFCS), Mach Trim - C-141A/C-141B Aircraft
1C-141B-2-22JG-30-1	Organizational Maintenance - Job Guide - Automatic Flight Control System (AFCS), Auto Throttle System (ATS)
1C-141B-2-22JG-50-1	Organizational Maintenance - Job Guide - Automatic Flight Control System (AFCS), All Weather Landing System (AWLS)

T.O. NUMBER	T.O. TITLE
COMMUNICATIONS	
1C-141B-2-23FI-00-1-1	Organizational Maintenance - Fault Isolation - Communication System, High Frequency (HF), Very High Frequency (VHF), and Ultra High Frequency (UHF) Subsystems, and Multiple Radio Transmit Installation
1C-141B-2-23FI-00-1-2	Organizational Maintenance - Fault Isolation - Communication System, Interphone and Public Address (PA) Subsystem, Fault Codes: 2340000 through 2340999, 2340101, and 2340P01
1C-141B-2-23FI-00-1-3	Organizational Maintenance - Fault Isolation - Communication System - Joint Airborne Communication Center/Command Post (JACC/CP) Procedures
1C-141B-2-23GS-00-1	Organizational Maintenance - General System, Communications
1C-141B-2-23JG-10-1	Organizational Maintenance - Job Guide - Communication System - HF Subsystem
1C-141B-2-23JG-20-1	Organizational Maintenance - Job Guide - Communication System, VHF/UHF Subsystems, and Multiple Radio Transmitter Installation
1C-141B-2-23JG-40-1	Organizational Maintenance - Job Guide - Communication System, Interphone Subsystem
1C-141B-2-23JG-60-1	Organizational Maintenance - Job Guide - Communication System, Static Discharge Subsystem
1C-141B-2-23JG-80-1	Organizational Maintenance - Job Guide - Communication System, JACC/CP Procedures

T.O. NUMBER	T.O. TITLE
ELECTRICAL POWER	
1C-141B-2-24FI-00-1	Organizational Maintenance - Fault Isolation - Electrical System - Generator Drive, AC, DC, and Emergency Generation, and External Power, Fault Codes: 2400001 through 2460999, 2420A01, 2420B01, 2420C01, 2430A01, 2430B01, 2440A01, and 2460A01
1C-141B-2-24GS-00-1	Organizational Maintenance - General System - Electrical System
1C-141B-2-24JG-10-1	Organizational Maintenance - Job Guide - Electrical System, General Information and Generator Drive
1C-141B-2-24JG-20-1	Organizational Maintenance - Job Guide - Electrical System AC-DC Power Generation, External Power, and Emergency Generator
EQUIPMENT & FURNISHINGS	
1C-141B-2-25FI-00-1	Organizational Maintenance - Fault Isolation, Equipment and Furnishings, Fault Codes: 2500000 through 2580999, 2500S01, 2540L01, 2560B01, 2560T11, 2580A01, 2580E11, 2580E21, 2580J31, 2580P41, and 2580L51
1C-141B-2-25GS-00-1	Organizational Maintenance - General System - Equipment and Furnishings
1C-141B-2-25JG-00-1	Organizational Maintenance - Job Guide - Equipment and Furnishings, General Maintenance
1C-141B-2-25JG-10-1	Organizational Maintenance - Job Guide - Equipment and Furnishings, Flight Station
1C-141B-2-25JG-50-1	Organizational Maintenance - Job Guide - Equipment and Furnishings, Cargo Compartment

T.O. NUMBER	T.O. TITLE
1C-141B-2-25JG-60-1	Organizational Maintenance - Job Guide - Equipment and Furnishings, Emergency
1C-141B-2-25JG-80-1	Organizational Maintenance - Job Guide - Equipment and Furnishings, Aerial Delivery System (ADS)
1C-141B-2-25JG-90-1	Organizational Maintenance - Job Guide - Equipment and Furnishings, Alternate Mission Kits (AMK)
FIRE PROTECTION	
1C-141B-2-26FI-00-1	Organizational Maintenance - Fault Isolation - Fire Protection System - Fault Codes: 2610000 through 2620999, 2610E01, 2610A11, 2610S21, 2620E01, and 2620A11
1C-141B-2-26GS-00-1	Organizational Maintenance - General System - Fire Protection System
1C-141B-2-26JG-10-1	Organizational Maintenance - Job Guide - Fire Protection System Detection, General Information, and Fire Detection
1C-141B-2-26JG-20-1	Organizational Maintenance - Job Guide - Fire Protection System Extinguishing
FLIGHT CONTROLS	
1C-141B-2-27FI-00-1-1	Organizational Maintenance - Fault Isolation - Flight Controls, Ailerons, Rudder, Elevators, Stall Prevention Failures, Fault Codes: 2710000 through 2733999, 2710AXX, 2720RXX, 2730EXX, and 2733EXX
1C-141B-2-27FI-00-1-2	Organizational Maintenance - Fault Isolation - Flight Controls, Pitch Trim, Flap, Spoilers Failures, Fault Codes: 2740000 through 2760999, 2740PXX, 2750FXX, and 2760SXX
1C-141B-2-27GS-00-1	Organizational Maintenance - General System - Flight Controls

T.O. NUMBER	T.O. TITLE
1C-141B-2-27JG-00-1	Organizational Maintenance - Job Guide - Flight Controls - General Maintenance
1C-141B-2-27JG-10-1	Organizational Maintenance - Job Guide - Flight Controls, Aileron Input System
1C-141B-2-27JG-10-2	Organizational Maintenance - Job Guide - Flight Controls, Aileron Output/Tab/Trim System
1C-141B-2-27JG-20-1	Organizational Maintenance - Job Guide - Flight Controls, Rudder Input System
1C-141B-2-27JG-20-2	Organizational Maintenance - Job Guide - Flight Controls, Rudder Output/Trim System
1C-141B-2-27JG-30-1-1	Organizational Maintenance - Job Guide - Flight Controls, Elevator Control System
1C-141B-2-27JG-30-1-2	Organizational Maintenance - Job Guide - Flight Controls, Elevator Control System
1C-141B-2-27JG-30-2	Organizational Maintenance - Job Guide - Flight Controls, Elevator Artificial Feel\Stall Prevention Systems
1C-141B-2-27JG-40-1	Organizational Maintenance - Job Guide - Flight Controls, Pitch Trim Mechanical-Hydraulic System
1C-141B-2-27JG-40-2	Organizational Maintenance - Job Guide - Flight Controls, Pitch Trim Electrical System
1C-141B-2-27JG-50-1-1	Organizational Maintenance - Job Guide - Flight Controls, Flaps Control System
1C-141B-2-27JG-50-1-2	Organizational Maintenance - Job Guide - Flight Controls, Flaps Control System
1C-141B-2-27JG-50-2	Organizational Maintenance - Job Guide - Flight Controls, Flaps Asymmetry System
1C-141B-2-27JG-60-1	Organizational Maintenance - Job Guide - Flight Controls, Spoilers Input System

T.O. NUMBER	T.O. TITLE
1C-141B-2-27JG-60-2-1	Organizational Maintenance - Job Guide - Flight Controls, Spoilers Output/Asymmetry System
1C-141B-2-27JG-60-2-2	Organizational Maintenance - Job Guide - Flight Controls, Spoilers Output/Asymmetry System
FUEL	
1C-141B-2-28FI-00-1-1	Organizational Maintenance - Fault Isolation - Fuel System - Ground and Aerial Refueling, Fault Codes: 2821000 through 2822999, 2821G01, 2821G11, 2821G21, 2822A01, 2822A11, 2822A31, and 2822A41
1C-141B-2-28FI-00-1-2	Organizational Maintenance - Fault Isolation - Fuel System - Distribution, Fault Codes: 2823D01, 2823D11, and 2823000 through 2823999
1C-141B-2-28FI-00-1-3	Organizational Maintenance - Fault Isolation - Fuel System - Jettison, Indicating and Quantity, Fault Codes: 2830J01, 2840Q11, and 2840000 through 2840999
1C-141B-2-28GS-00-1	Organizational Maintenance - General System - Fuel System
1C-141B-2-28JG-00-1	Organizational Maintenance - Job Guide - Fuel System, General Maintenance
1C-141B-2-28JG-10-1	Organizational Maintenance - Job Guide - Fuel System, Storage
1C-141B-2-28JG-20-1-1	Organizational Maintenance - Job Guide - Fuel System, Ground and Aerial Refueling System
1C-141B-2-28JG-20-1-2	Organizational Maintenance - Job Guide - Fuel System, Distribution
1C-141B-2-28JG-40-1	Organizational Maintenance - Job Guide - Fuel System, Indication

T.O. NUMBER	T.O. TITLE
HYDRAULIC POWER	
1C-141B-2-29FI-00-1	Organizational Maintenance - Hydraulic System, Fault Codes: 2911A01, 2911000 through 2911999, 2912A01, 2912000 through 2912999, 2913A01, and 2913000 through 2913999
1C-141B-2-29GS-00-1	Organizational Maintenance - General System - Hydraulic System
1C-141B-2-29JG-10-1-1	Organizational Maintenance - Job Guide - Hydraulic System
1C-141B-2-29JG-10-1-2	Organizational Maintenance - Job Guide - Hydraulic System
ICE AND RAIN PROTECTION	
1C-141B-2-30FI-00-1	Organizational Maintenance - Fault Isolation - Ice and Rain Protection - Fault Codes: 301000 through 3090999, 3010W01, 3010E11, 3040W01, 3040R11, 3080W011, and 3090E01
1C-141B-2-30GS-00-1	Organizational Maintenance - General System - Ice and Rain Protection
1C-141B-2-30JG-10-1	Organizational Maintenance - Job Guide - Ice and Rain Protection - Wing Anti-Icing and Empennage Deicing System
1C-141B-2-30JG-40-1	Organizational Maintenance - Job Guide - Ice and Rain Protection - Window and Windshield Rain Removal and Anti-Icing Systems
1C-141B-2-30JG-80-1	Organizational Maintenance - Job Guide - Ice and Rain Protection - Ice Detection System
1C-141B-2-30JG-90-1	Organizational Maintenance - Job Guide - Ice and Rain Protection - Engine Deicing (Engine Pressure Ratio [EPR] Probe Heaters)

T.O. NUMBER	T.O. TITLE
INDICATING AND RECORDING SYSTEM	
1C-141B-2-31FI-00-1	Organizational Maintenance - Fault Isolation - Indicating/Recording Systems - Fault Codes: 3131000 through 3150999, 3131C01, 3132F01, 3133L01, 3133T11, and 3150T01
1C-141B-2-31GS-00-1	Organizational Maintenance - General System - Indicating/Recording System
1C-141B-2-31JG-30-1	Organizational Maintenance - Job Guide - Indicating/Recording Systems, Recorder System
1C-141B-2-31JG-50-1	Organizational Maintenance - Job Guide - Indicating/Recording Systems, Central Warning System
LANDING GEAR	
1C-141B-2-32FI-00-1	Organizational Maintenance - Fault Isolation - Landing Gear System, Fault Codes: 3213000 through 3260099
1C-141B-2-32GS-00-1	Organizational Maintenance - General System - Landing Gear
1C-141B-2-32JG-00-1	Organizational Maintenance - Job Guide - Landing Gear General Maintenance
1C-141B-2-32JG-10-1	Organizational Maintenance - Job Guide - Main Landing Gear (MLG)
1C-141B-2-32JG-10-2	Organizational Maintenance - Job Guide - Main Landing Gear (MLG)
1C-141B-2-32JG-20-1	Organizational Maintenance - Job Guide - Nose Landing Gear (NLG)
1C-141B-2-32JG-20-2	Organizational Maintenance - Job Guide - Nose Landing Gear (NLG)
1C-141B-2-32JG-40-1	Organizational Maintenance - Job Guide - Main Landing Gear (MLG) Brakes and Anti-skid Systems
1C-141B-2-32JG-50-1	Organizational Maintenance - Job Guide - Nose Landing Gear (NLG) Steering

T.O. NUMBER	T.O. TITLE
LIGHTS	
1C-141B-2-33FI-00-1-1	Technical Manual - Fault Isolation - Organizational Maintenance, General Lighting System
1C-141B-2-33F-00-1-2	Technical Manual - Fault Isolation - Organizational Maintenance, General Lighting System
1C-141B-2-33FI-00-2	Technical Manual - Fault Isolation - Organizational Maintenance, General Lighting System
1C-141B-2-33GS-00-1	Organizational Maintenance - General System, Lighting System
1C-141B-2-33JG-10-1	Organizational Maintenance - Job Guide - Lighting System, Flight Station Lighting
1C-141B-2-33JG-30-1	Organizational Maintenance - Job Guide - Lighting System - Cargo and Service Compartment Lighting
1C-141B-2-33JG-40-1	Organizational Maintenance - Job Guide - Lighting System - Exterior Lighting
1C-141B-2-33JG-50-1	Organizational Maintenance - Job Guide - Lighting System - Emergency Lighting
NAVIGATION	
1C-141B-2-34FI-00-1-1	Organizational Maintenance - Fault Isolation, Navigation (NAV) System - General Information and Pitot-Static, Central Air Data Computer (CADC), Total Air Temperature (TAT) and Radar Altimeter System, Fault Codes: 3410001 through 3410999, 3413001, 3413999, 3414001 through 3414999, 3410001, 3410002, 3413T01, 3414R01, and 3414R02

T.O. NUMBER	T.O. TITLE
1C-141B-2-34FI-00-1-2	Organizational Maintenance - Fault Isolation, Navigation System - Attitude Heading Reference, Flight Director, Glideslope, and Marker Beacon System, Fault Codes: 3421001 through 3421015, 3421A01, 3422001 through 3422027, 3422F01, 3431001 through 3431006, 3431G01, 3432001 through 3432014, and 3432M01
1C-141B-2-34FI-00-1-3	Organizational Maintenance - Fault Isolation, Navigation System - Identification Friend or Foe (IFF), Weather Radar, and Ground Proximity System
1C-141B-2-34FI-00-1-4	Organizational Maintenance - Fault Isolation, Navigation System, Inertial Navigation System (INS), Fault Codes: 3444001 through 3444029, and 3444101
1C-141B-2-34FI-00-1-5	Organizational Maintenance - Fault Isolation, Navigation System, Auto Directional Finder (ADF), VHF, NAV, and Tactical Air Navigation (TACAN) System, Fault Codes: 3451000 through 3453999, 3451A01, 3451A02, 3452V01, 3452V02, 3453T01, and 3453T02,
1C-141B-2-34FI-00-1-6	Organizational Maintenance - Fault Isolation, Navigation System, Intraformation Positioning System (Station Keeping Equipment [SKE]), Fault Codes: 3460001 through 3460014, and 3460S01
1C-141B-2-34FI-00-1-7	Organizational Maintenance - Fault Isolation, Navigation System, Fuel Savings Advisory System (FSAS), Fault Codes: 3470001 through 3470024, and 3470F01
1C-141B-2-34GS-00-1	Organizational Maintenance - General System, Navigation System

T.O. NUMBER	T.O. TITLE
1C-141B-2-34JG-00-1	Organizational Maintenance - Job Guide - Navigation System, General Maintenance
1C-141B-2-34JG-10-1	Organizational Maintenance - Job Guide - Navigation System Pitot-Static, Central Air Data Computer, Total Air Temperature, and Radar Altimeter Systems
1C-141B-2-34JG-20-1	Organizational Maintenance - Job Guide - Navigation System, Attitude Heading Reference and Flight Director Systems
1C-141B-2-34JG-30-1	Organizational Maintenance - Job Guide - Navigation System, Glideslope and Marker Beacon Systems
1C-141B-2-34JG-40-1-1	Organizational Maintenance - Job Guide - Navigation, IFF, Weather Radar, and Ground Proximity Warning System
1C-141B-2-34JG-40-1-2	Organizational Maintenance - Job Guide - Navigation System, Inertial Navigation System
1C-141B-2-34JG-50-1	Organizational Maintenance - Job Guide - Navigation System, Automatic Direction Finding, VHF Navigation, and TACAN System
1C-141B-2-34JG-60-1	Organizational Maintenance - Job Guide - Navigation System, Intraformation Positioning (Station Keeping Equipment) System
1C-141B-2-34JG-70-1	Organizational Maintenance - Job Guide - Navigation System, Fuel Savings Advisory System (FSAS)

OXYGEN

1C-141B-2-35FI-00-1	Organizational Maintenance - Fault Isolation, Oxygen System - Fault Codes: 3510000 through 3520999
1C-141B-2-35GS-00-1	Organizational Maintenance - General System, Oxygen System

T.O. NUMBER	T.O. TITLE
1C-141B-2-35JG-00-1	Organizational Maintenance - Job Guide - Oxygen System, General Maintenance
1C-141B-2-35JG-10-1	Organizational Maintenance - Job Guide - Oxygen System, Crew Oxygen
1C-141B-2-35JG-20-1	Organizational Maintenance - Job Guide - Oxygen System, Troop Oxygen
SYSTEMS INTEGRATION AND DISPLAY	
1C-141B-2-46FI-00-1	Organizational Maintenance - Fault Isolation - Integration and Display - Selected C-141B Aircraft
1C-141B-2-46GS-00-1	Organizational Maintenance - General System - System Integration and Display - Selected C-141B Aircraft
1C-141B-2-46JG-20-1	Organizational Maintenance - Job Guide - Systems Integration and Display Processing and integration, AN/ASN-159 Integrated Sensor Display System (ISDS), Selected C-141B Aircraft
AUXILIARY POWER	
1C-141B-2-49-FI-00-1	Organizational Maintenance - Fault Isolation - Auxiliary Power Unit (APU), Fault Codes: 4910000 through 4910999, 4910A01, 4910A11, and 4910A21
1C-141B-2-49GS-00-1	Organizational Maintenance - General System - Auxiliary Power Unit (APU)
1C-141B-2-49JG-10-1-1	Organizational Maintenance - Job Guide - Auxiliary Power Unit (APU)
1C-141B-2-49JG-10-1-2	Organizational Maintenance - Job Guide - Auxiliary Power Unit (APU)

T.O. NUMBER	T.O. TITLE
STRUCTURES	
1C-141B-2-51JG-00-1	Organizational Maintenance - Job Guide - Structures
DOORS	
1C-141B-2-52FI-00-1-1	Organizational Maintenance - Fault Isolation - Structural Doors - Cargo Doors - Fault Codes: 5230000 through 5230999 and 5230A01
1C-141B-2-52FI-00-1-2	Organizational Maintenance - Fault Isolation - Structural Doors - Door Warning, Fault Codes: 5270000 through 5270999 and 5270A01
1C-141B-2-52GS-00-1	Organizational Maintenance - General System - Structural Doors
1C-141B-2-52JG-00-1	Organizational Maintenance - Job Guide - Structural Doors, General Information
1C-141B-2-52JG-10-1	Organizational Maintenance - Job Guide - Structural Doors, Crew and Troop Doors
1C-141B-2-52JG-20-1	Organizational Maintenance - Job Guide - Structural Doors, Emergency Exits
1C-141B-2-52JG-30-1	Organizational Maintenance - Job Guide - Structural Doors, Cargo Doors
1C-141B-2-52JG-30-2	Organizational Maintenance - Job Guide - Structural Doors, Cargo Doors
1C-141B-2-52JG-70-1	Organizational Maintenance - Job Guide - Structural Doors, Door Warning
WINDOWS	
1C-141B-2-56JG-00-1	Organizational Maintenance - Job Guide - Windows

T.O. NUMBER	T.O. TITLE
STANDARD PRACTICES (ENGINE)	
1C-141B-2-70JG-00-1	Organizational Maintenance - Job Guide - Power Plant Limits and Operating Checklist
1C-141B-2-70JG-00-2	Organizational Maintenance - Job Guide - Power Plant, General Maintenance
POWER PLANT	
1C-141B-2-71FI-00-1	Organizational Maintenance - Fault Isolation - Power Plant, Fault Codes 7100000 through 7100999, and 7100A01
1C-141B-2-71GS-00-1	Organizational Maintenance - General System - Power Plant
1C-141B-2-71JG-00-1	Organizational Maintenance - Job Guide - Power Plant
ENGINE FUEL AND CONTROL	
1C-141B-2-73JG-00-1	Organizational Maintenance - Job Guide - Power Plant Fuel System
AIR	
1C-141B-2-75JG-00-1	Organizational Maintenance - Job Guide - Power Plant Air System
ENGINE CONTROLS	
1C-141B-2-76FI-00-1	Organizational Maintenance - Fault Isolation - Power Plant Control System, Fault Codes: 7610000 through 7620999, 7610A01, and 7620A01
1C-141B-2-76JG-00-1	Organizational Maintenance - Job Guide - Power Plant Control System
ENGINE INDICATING	
1C-141B-2-77JG-00-1	Organizational Maintenance - Job Guide - Power Plant Indicating System

T.O. NUMBER	T.O. TITLE
EXHAUST	
1C-141B-2-78FI-00-1	Organizational Maintenance - Fault Isolation - Power Plant Thrust Reverser System, Fault Codes: 7830000 through 7830999, and 7830A01
1C-141B-2-78JG-00-1	Organizational Maintenance - Job Guide - Power Plant Exhaust System
OIL	
1C-141B-2-79JG-00-1	Organizational Maintenance - Job Guide - Power Plant Oil System
STARTING	
1C-141B-2-80FI-00-1	Organizational Maintenance - Fault Isolation - Power Plant Starting System, Fault Codes: 8000000 through 8000999, and 8000A01
1C-141B-2-80JG-00-1	Organizational Maintenance - Job Guide - Power Plant Starting System
SURVEILLANCE	
1C-141B-2-93FI-00-1	Organizational Maintenance - Fault Isolation - Surveillance, C-141B Aircraft
1C-141B-2-93GS-00-1	Organizational Maintenance - General Systems - Surveillance, C-141B Aircraft
1C-141B-2-93JG-20-1	Organizational Maintenance - Job Guide - Electronic Warfare, Passive, C-141B A/C
1C-141B-2-93JG-50-1	Organizational Maintenance - Job Guide - Surveillance, Infrared Sensors, C-141B Aircraft
1C-141B-2-99FI-00-1	Organizational Maintenance - Fault Isolation - Electronic Warfare - C-141B Aircraft
1C-141B-2-99GS-00-1	Organizational Maintenance - General Systems - Electronic Warfare, C-141B Aircraft

T.O. NUMBER	T.O. TITLE
1C-141B-3	Structural Repair Instructions, C-141B
1C-141B-4-1	Illustrated Parts Breakdown - Numerical Index and Reference Designation Index
1C-141B-4-2	Illustrated Parts Breakdown - Airframe Group
1C-141B-4-3	Illustrated Parts Breakdown - Hydraulic System
1C-141B-4-4	Illustrated Parts Breakdown - Fuel System
1C-141B-4-5	Illustrated Parts Breakdown - Utilities and Pneumatic Systems
1C-141B-4-6	Illustrated Parts Breakdown - Flight Control and Instrument Systems
1C-141B-4-7	Illustrated Parts Breakdown - Electrical System
1C-141B-4-8	Illustrated Parts Breakdown - Electronic System
1C-141B-4-9	Illustrated Parts Breakdown - Power Plant
1C-141B-4-10	Illustrated Parts Breakdown - Special Support Equipment
1C-141B-5	Checklist - Basic Weight and Loading Data
1C-141B-6	Aircraft Scheduled Inspections and Maintenance Requirements
1C-141B-6CF-1	Acceptance and/or Functional Check Flight Procedures - USAF Series C-141B
1C-141B-6CL-1	Checklist - Acceptance and/or Functional Check Flight (FCF) - USAF Series C-141B
1C-141B-6WC-1	Workcards - Preflight (PR) Inspection
1C-141B-6WC-2	Thruflight (TH) Inspection Workcards
1C-141B-6WC-4	Home Station Check (HSC) Workcards
1C-141B-6WC-5	Minor/Major Inspection Work Cards

T.O. NUMBER	T.O. TITLE
1C-141B-6WC-9	Work Cards - Periodic (PE) Engine Inspection and Reconditioning TF33-P71P7A
1C-141B-6WC-11	Work Cards - Buffet Lavatory Unit Inspection
1C-141B-6WC-12	Work Cards - Alternate Mission Kits (AMK) Inspection
1C-141B-6WC-13	Refurbish Inspection Work Cards
1C-141B-9	Loading Instructions
1C-141B-9CL-1	Checklist - Loadmasters Loading/Off Loading
1C-141B-9CL-2	Checklist - Minuteman On/Off Loading
1C-141B-9CL-3	Checklist - Minuteman Ground Crew On/Off Loading
1C-141B-10	Power Package Build-up Instructions
1C-141B-10-1	Field Test Instructions - Engine Test Facility
1C-141B-17	Storage of Aircraft
1C-141B-21	Equipment Inventory List
1C-141B-23	System Peculiar Corrosion Control
1C-141B-33-1-1	Nonnuclear Munitions Loading Procedures - AN/ALE-40(V) Countermeasures Dispenser System, C-141B Aircraft
1C-141B-33-1-2	Nonnuclear Munitions Loading Procedures - Countermeasures Dispenser System, Selected C-141B Aircraft
1C-141B-33-1-2CL-1	Checklist - Nonnuclear Munitions Loading Procedures - AN/ALE-40(V) Countermeasures Dispenser System, C-141B Aircraft (SOLL II)
1C-141B-33-1-2CL-2	Checklist - Nonnuclear Munitions Loading Procedures - AN/ALE-40(V) Countermeasures Dispenser System, C-141B Aircraft (Snowstorm)

T.O. NUMBER	T.O. TITLE
1C-141B-33-1-2CL-3	Checklist - Nonnuclear Munitions Loading Procedures - AN/ALE-40(V) Countermeasures Dispenser System - Selected C-141B Aircraft
1C-141B-36	Non-Destructive Inspection Procedures
1C-141B-39	Aircraft Battle Damage Repair (ABDR) Instructions, C-141B Aircraft
1C-141B-102	Implementation of C-141 Series Aircraft Usage Report

NOTES

MISCELLANEOUS REFERENCES AND TECHNICAL ORDERS

The following is a list of technical data and safety publications that you might need in the course of your normal duties. By no means is this a complete list, so you should add to it as you desire.

T.O. NUMBER	T.O. TITLE
T.O. 00-5-1	Air Force Technical Order System
T.O. 00-20-1	Preventative Maintenance Program, General Policy Requirements and Procedures
T.O. 00-20-2	Maintenance Data Collection System
T.O. 00-20-5	Aircraft, Drone, Aircrew Training Devices, Engines, and Air-Launched Missile Inspections, Flight Reports, and Supporting Maintenance Documents
T.O. 00-20-14	Air Force Metrology and Calibration Program
T.O. 00-20-107	Maintenance Assistance
T.O. 00-25-172	Ground Servicing of Aircraft and Static Grounding/Bonding
T.O. 00-35D-54	USAF Material Deficiency Reporting and Investigating System
T.O. 1-1-1	Opening Instructions - Cleaning of Aerospace Equipment
T.O. 1-1-2	Corrosion Prevention and Control for Aerospace Equipment
T.O. 1-1-3	Inspection and Repair of Aircraft Integral Tanks and Fuel Cells
T.O. 1-1-4	Exterior Finishes, Insignia and Markings Applicable to USAF Aircraft
T.O. 1-1-300	Acceptance/Functional Check Flights and Maintenance Operational Checks
T.O. 1-1-688	Use of Electrical Equipment in Hazardous Areas (Aircraft Hangars, Ramp, Aircraft Service Areas)

T.O. NUMBER	T.O. TITLE
T.O. 1-1A-1	Engineering H/B Series for Aircraft Repair General Manual for Structural Repair
T.O. 1-1A-8	Hardware
T.O. 4T-1-3	Inspection, Maintenance Instructions-Storage and Disposition of Aircraft Tires and Inner Tubes
T.O. 13F4-4-71	Operation, Servicing, and Repair Instructions-Bromochloromethane Vaporizing Liquid Fire Extinguishers, Model FEU-1/M, FEU-2/M (Fireguard)
T.O. 15X-1-1	Maintenance Instructions Oxygen Equipment
T.O. 32B-14-3-1-101	Operation and Service Instructions of Torque Indicating Devices
T.O. 33-1-37	Joint Oil Analysis Program (JOAP)
T.O. 35A2-11-1	Inspection & Overhead for Hydraulic Jacks
AFOSH 127-31	Personal Protective Clothing & Equipment
AFOSH 127-38	Hydrocarbon Fuels General
AFOSH 127-39	Fuel Servicing Operations
AFOSH 127-43	Flammable & Combustible Liquids
AFOSH 127-56	Portable Fire Extinguishers
AFOSH 127-57	Aircraft Hand Portable & Fixed Fire Extinguishers Systems
AFOSH 127-66	General Industrial Operations
AFOSH 127-100	Occupational Safety (Aircraft Flight Line - Ground Operations and Activities)
AFOSH 127-110	Nondestructive Inspection and Oil Analysis Program

AIRCRAFT GENERAL

Airframe Description

The C-141 Starlifter, manufactured by the Lockheed Georgia Company, is a long-range, high-speed, high-altitude, sweptwing monoplane, designed for use as a heavy logistic transport. The aircraft is designed to airlift various types of combat support equipment, personnel, air evac patients, and fully assembled missiles. It also has an aerial delivery system (ADS) capability. The aircraft is equipped with a fully retractable tricycle landing gear and a steerable nose wheel. The landing gear consists of two “four-wheel bogie” type main gears which mount dual wheels forward and aft of the shock strut (in pods on each side of the aircraft), and a steerable, dual nose wheel. The aircraft is powered by four Pratt & Whitney turbofan jet engines that are equipped with target-type thrust reverser doors which are used to assist in decelerating the aircraft on the ground. The aircraft has an auxiliary power unit (APU), located in the forward portion of the left wheel pod, which provides electrical and pneumatic power for starting the engines, and can be used to satisfy other electrical and pneumatic requirements of the aircraft while the aircraft is on the ground. The aircraft has inflight refueling (IFR) capability. Modified aircraft have a station keeping equipment (SKE) system that permits operation with a portable ground-based zone marker to provide data to the ADS.

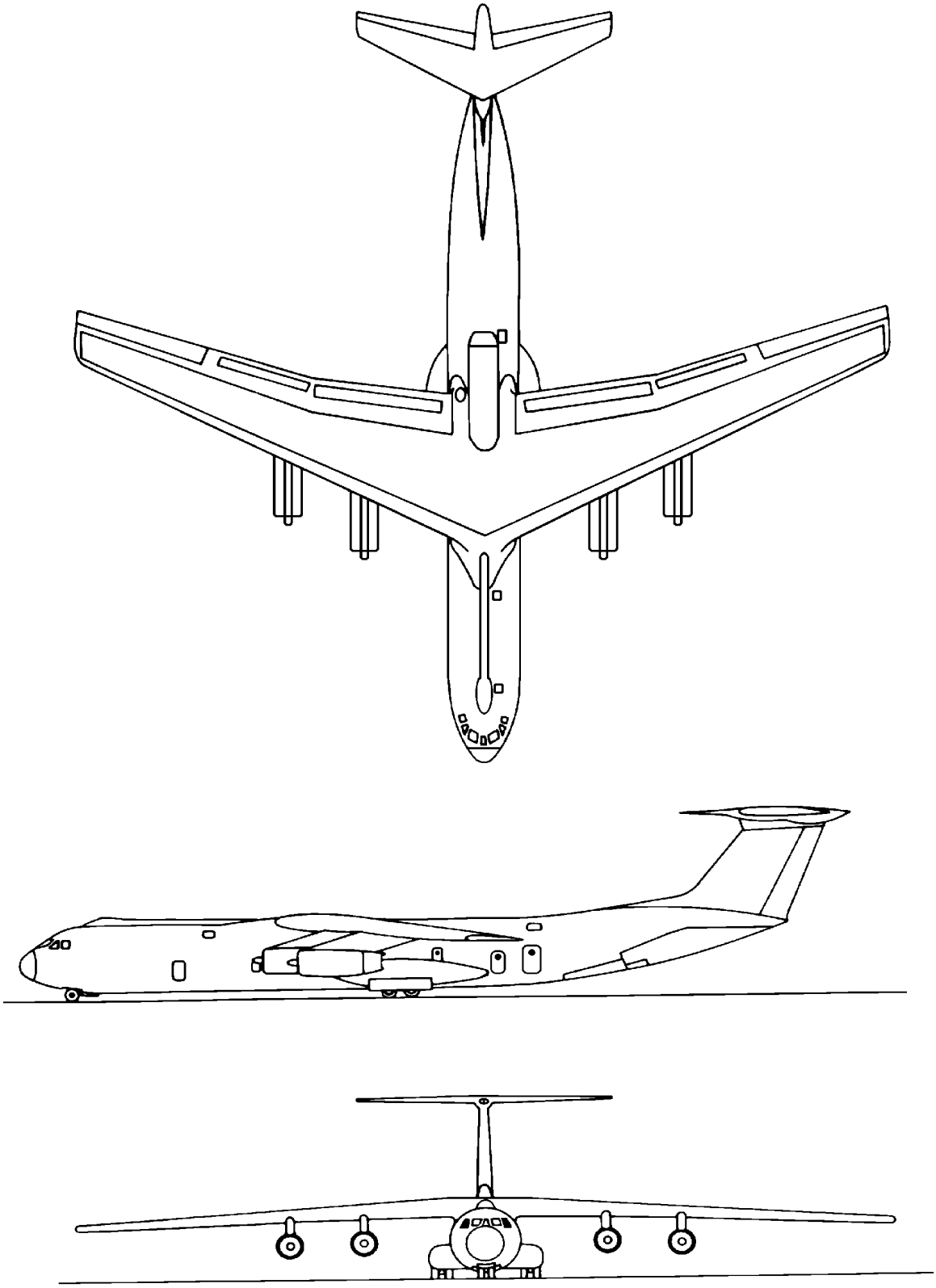

C-141B Aircraft

TIME LIMITS/MAINTENANCE CHECKS

Note: Here is a brief description and explanation of the inspection requirements for the C-141B aircraft. Enough information is presented to introduce you to these concepts however, this section is not designed to teach you everything. Complete information on this subject can be found in T.O. 00-20-5.

BASIC INSPECTION CONCEPTS

The C-141B utilizes the isochronal (ISO) and programmed depot maintenance (PDM) inspection concepts. These inspections are accomplished in accordance with the applicable -6 scheduled inspection and maintenance requirements manual or inspection workcards. The -6 inspection workcards may include varying calendar inspection periods (30-day, 90-day, etc.) as determined by the aircraft system program manager (SPM) and MAJCOM.

ISOCHRONAL (ISO) CONCEPT

The ISO concept is designed to translate flying hour utilization rates into calendar periods, usually expressed in days. The SPM is responsible for ensuring the calendar period is properly established to meet maintenance and engineering requirements. In the event programmed flying hours are changed, adjustments will be made to the inspection interval as specified in the -6 scheduled inspection and maintenance requirements manual. The SPM in conjunction with the MAJCOM will determine the necessary adjustments.

The C-141B inspections that fall under the isochronal (ISO) concept are:

Preflight (PR)

This is a flight preparedness check that will be done in accordance with the -6 scheduled inspection and maintenance requirements manual. It is required prior to the first flight of a specified flying period. The specified flying period is a MAJCOM determination. The preflight inspection includes visually examining the aircraft and operationally checking certain systems and components to ensure there are no serious defects or malfunctions and that the aircraft is safe for flight.

Thruflight (TH)

This is a between flights inspection, and will be accomplished after each flight when a turnaround sortie or a continuation flight is scheduled and a BPO inspection is not required. The thruflight inspection consists of checking the aircraft for flight continuance by performing visual examination or operational checks of certain components, areas, or systems to assure that no defects exist which would be detrimental to further flight.

Basic Postflight (BPO)

This is a more thorough check than the preflight or the thruflight inspections and is accomplished in accordance with the -6 scheduled inspection and maintenance requirements manual for the aircraft. The BPO inspection is accomplished after the last flight of a specified flying period. This inspection will consist of checking the aircraft

condition by performing visual examination or operational checks of certain components, areas or systems to assure that no defects exist which would be detrimental to flight. Obligations for maintenance personnel to perform a BPO will exist only when the aircraft is released by Operations.

Combined Preflight/Basic Postflight (PR/BPO)

These inspections may be combined together. The SPM in conjunction with the MAJCOM has the option of combining these inspections for various purposes. This consolidates the requirements of the inspections into a single inspection that is accomplished at the end of the flying period. It eliminates duplication of inspection items that would occur if separate inspections were performed and has the same validity period as the preflight inspection itself. Combining these inspections has proven to be valuable during periods when high aircraft generation rates are necessary.

Home Station Check (HSC)

This consists of inspection requirements arranged and designed for accomplishment when the aircraft returns from a long-range mission or upon expiration of a specified short-term calendar interval. This inspection is due at the calendar interval specified in the -6 scheduled inspection and maintenance requirements manual. This date will be computed from the programmed start date of the last inspection. The inspection is accomplished in conjunction with minor and major inspections.

Major (MAJ)

This inspection is due upon accrual of the number of calendar days established as the inspection interval in the applicable -6. This date is computed from the completion date of the last major inspection. The major inspection is a thorough and searching inspection of the entire weapon system or support system, and individual requirements may be more extensive in scope than previous inspection items. The inspection consists primarily of checking certain components, areas, and systems of the weapon system or equipment, which due to their function, require less frequent inspection than that required by other inspections. This inspection is accomplished to determine if a condition exists which, if not corrected, could result in failure of a component or cause a system malfunction prior to the next scheduled inspection.

PROGRAMMED DEPOT MAINTENANCE (PDM)

PDM is an inspection requiring skills, equipment or facilities not normally possessed by operating locations. Individual areas, components and systems are inspected to a degree beyond -6 inspections. Operating location tasks may be accomplished at PDM if their accomplishment is economically feasible and approved by MAJCOM. PDM is accomplished at an interval established in table II of T.O. 00-25-4 and is measured from output to input date for each PDM. Aircraft under the ISO concept do not accrue -6 inspection days towards the next ISO inspection during PDM. This includes aircraft input to a depot for an analytical condition inspection (ACI). When an aircraft exceeds the PDM cycle, a red dash will be annotated on the prescribed forms. If an aircraft exceeds the PDM cycle by 90 days, the red dash will be upgraded to a red X unless an extension is granted by the SPM.

CALENDAR INSPECTIONS

30-Day Inspection

When an aircraft does not fly or is out-of-commission for more than 30 days consecutive, a BPO is required before the aircraft is returned to operational status. This will be construed as a minimum 30-day calendar inspection and the logistics group commander (LGC) will determine whether additional inspection or maintenance work is required. This paragraph does not apply to aircraft that are on ground alert where recurring visual inspections and operational checks are accomplished.

90-Day Inspection

When an aircraft does not fly for more than 90 consecutive days (does not apply to ground alert or training aircraft where recurring visual inspections and operational checks are accomplished), as a minimum accomplish the following before the aircraft is returned to operational status:

HSC (as determined by the Senior Maintenance Officer)

An operational check of all functional aircraft systems (excluding landing gear retraction)

Accomplishment of all periodic or minor lubrication requirements (including wheel bearing lubrication)

Any additional inspection or maintenance requirements will be determined by the LGC.

NOTES

DIMENSIONS AND AREAS

General

This chapter will provide a brief explanation and description of five separate topic areas. First, we'll look at aircraft dimensions (general) which will provide a description of the principle dimensions of the aircraft, such as height, length, weight etc. Then we'll discuss aircraft stations which will describe the aircraft station numbering system, by identifying waterlines and stringer numbers. Next, we'll show aircraft access and inspection provisions by identifying the locations of all of the aircraft access doors and panels. Then we'll describe the aircraft interior arrangement which will provide an overview on the construction of the cargo compartment, explaining how cargo is loaded and secured on-board the aircraft. And finally, we'll look at aircraft exterior walkways and no-step areas by identifying permissible walkways and no-step areas on top of the cargo compartment, wings, landing gear pods, and T-Tail.

NOTE

1. DIMENSIONS SHOWN AIRPLANE EQUIPPED AND EMPTY.

2 CONDITION	DISTANCE
NEUTRAL	39 FT 3 IN.
(NEUTRAL ELEVATOR)	11.96 m
BULLET TIP UP 4°	39 FT 6 IN.
(NEUTRAL ELEVATOR)	12.03 m
BULLET TIP DOWN 12.5°	40 FT 7 IN.
(ELEVATOR FULL UP 25°-MAXIMUM HEIGHT)	12.37 m

3 GROUND CLEARANCE WITH GEAR FULLY COMPRESSED 1 FT 4 IN. - 0.40 m

WEIGHT DATA	POUNDS	kg
MAXIMUM LANDING WEIGHT	323,100	146556
MAXIMUM TAXI OR TOWING WEIGHT	325,000	147417
LANDING GEAR RAMP LOADING (TIRE FOOTPRINT) FOR MAXIMUM GROSS WEIGHT CONDITION		
MAIN GEAR	37,903	17192
NOSE GEAR	34,775	15773

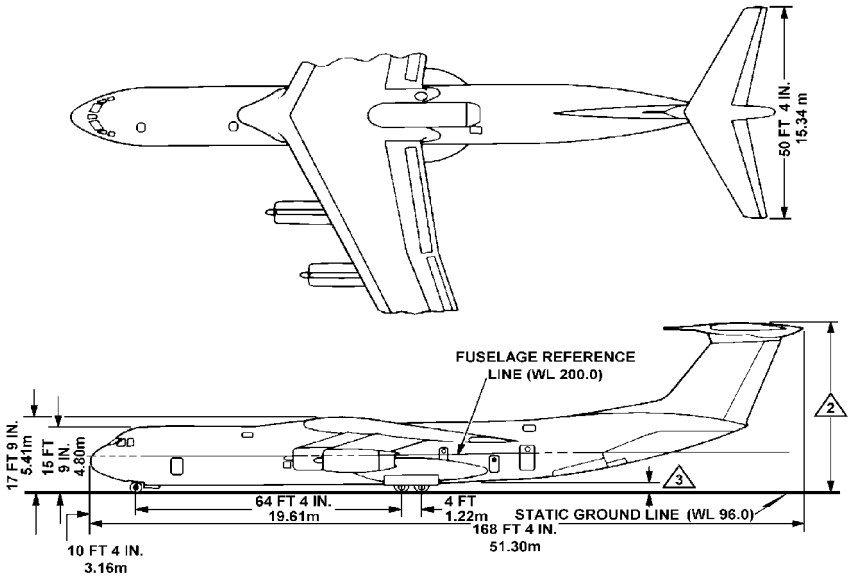

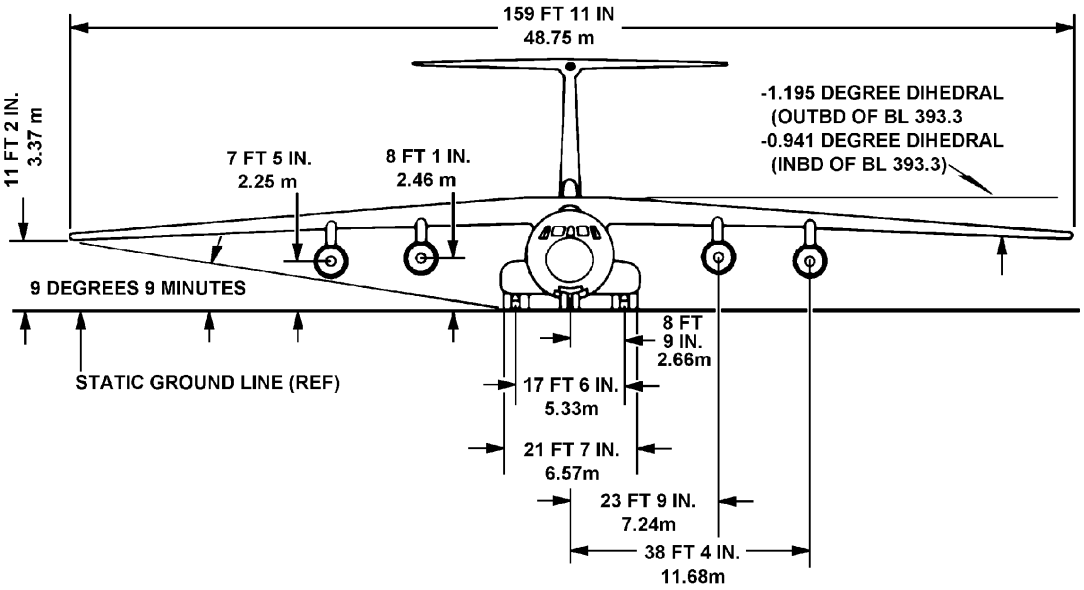

Dimensions - General

COMPARTMENT DIAGRAM

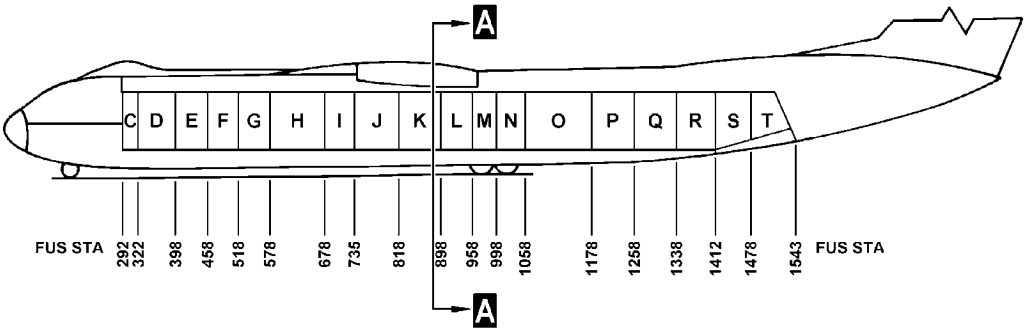

LOADING COMPARTMENTS

NOTE

THE DIMENSIONS SHOWN IN VIEW A ARE TYPICAL FOR THE ENTIRE COMPARTMENT. ALL OTHER SECTIONS WILL HAVE AN EQUAL OR GREATER CLEAR AREA.

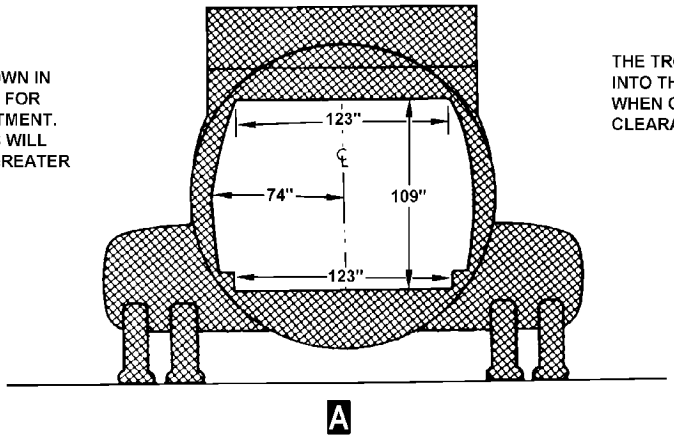

CAUTION

THE TROOP DOORS EXTEND INTO THE CLEAR CARGO AREA WHEN OPEN AND REDUCE THE CLEARANCE HEIGHT.

Fuselage Stations - Compartment Diagram (Sheet 1 of 3)

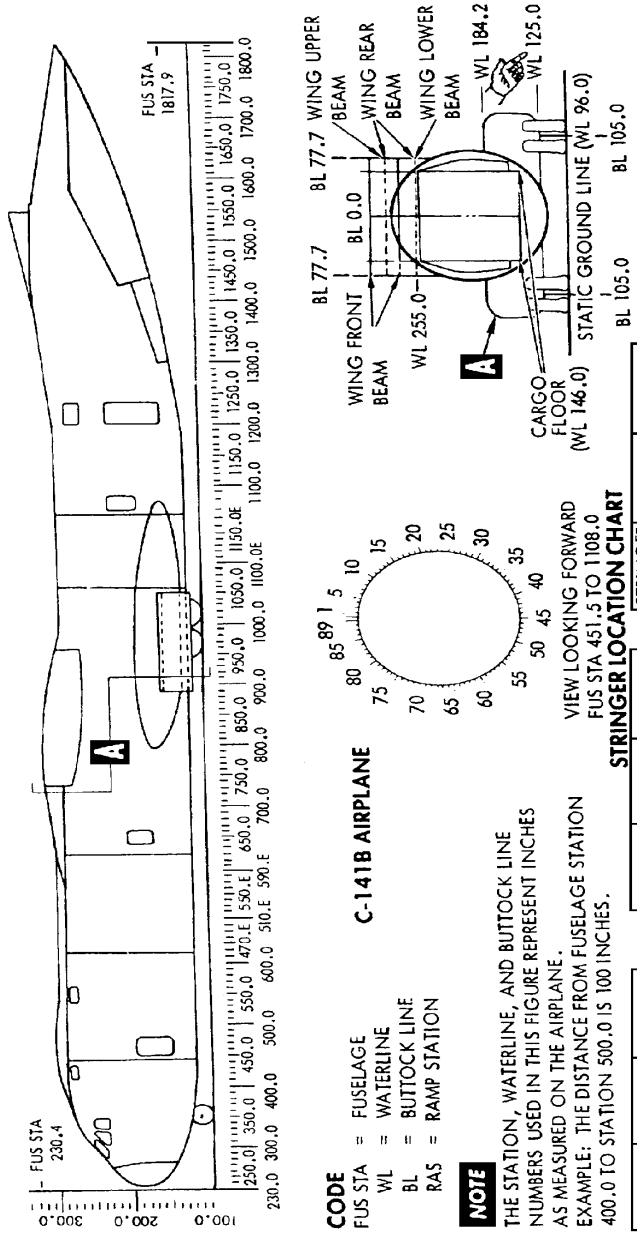

STRINGER LOCATION CHART

STRINGER NUMBER LH	STRINGER NUMBER RH	BL	WL
89	1	2.800	284.954
88	2	8.582	284.566
87	3	14.324	283.784
86	4	20.000	282.614
85	5	25.725	281.014
84	6	31.325	279.018
83	7	36.771	276.635
82	8	42.037	273.877
81	9	47.098	270.759
80	10	51.928	267.294
79	11	56.505	263.500
78	12	60.805	259.395

STRINGER NUMBER LH	STRINGER NUMBER RH	BL	WL
77	13	64.807	255.00
76	14	68.551	250.256
75	15	71.949	245.259
74	16	74.983	240.032
73	17	77.638	234.604
72	18	79.900	229.000
71	19	81.672	223.553
70	20	83.072	218.000
69	21	84.104	212.309
68	22	84.746	206.561
67	23	84.996	200.782
66	24	84.853	195.000

STRINGER NUMBER LH	STRINGER NUMBER RH	BL	WL
65	25	84.259	188.800
64	26	83.213	182.660
63	27	81.720	176.614
62	28	79.788	170.692
61	29	77.427	164.929
60	30	74.651	159.996
59	31	71.475	153.996
58	32	67.914	148.886
57	33	63.796	143.829
56	34	60.000	139.792
55	35	55.615	135.720
54	36	50.955	131.966

STRINGER NUMBER LH	STRINGER NUMBER RH	BL	WL
53	37	46.041	128.549
52	38	40.900	125.487
51	39	35.456	122.748
50	40	29.829	120.406
49	41	24.050	118.473
48	42	18.146	116.960
47	43	12.150	115.873
46	44	6.090	115.218
	45	0.000	115.000

Fuselage Stations - Compartment Diagram (Sheet 2 of 3)

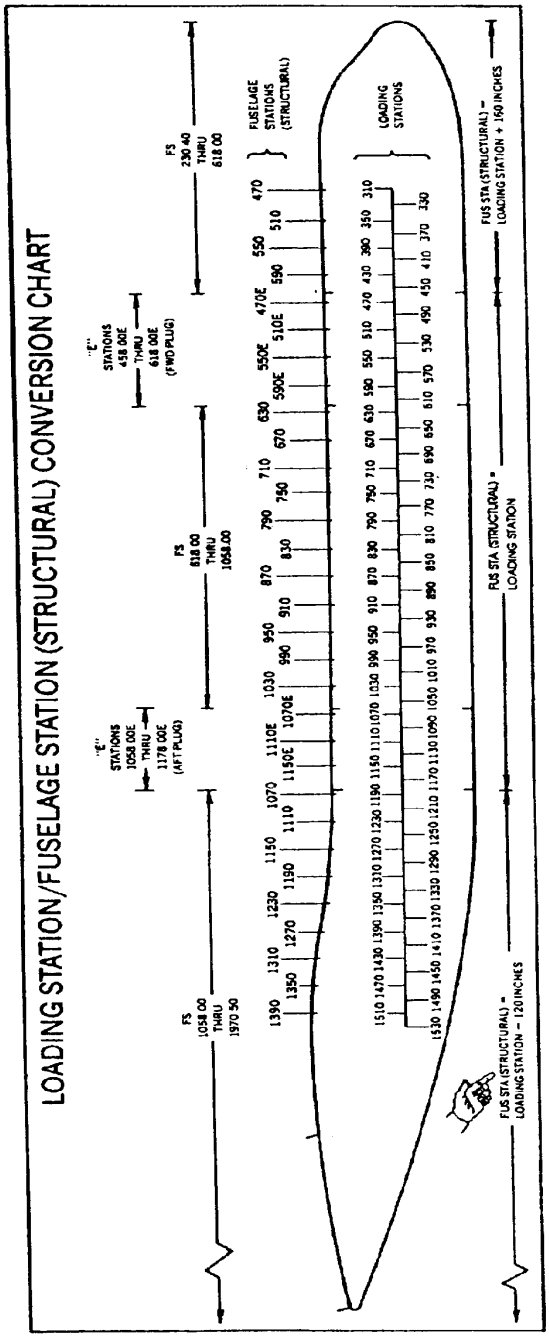

C141B AIRPLANE

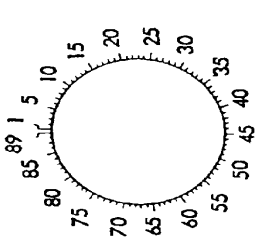

VIEW LOOKING FORWARD

FUS STA 451.5 TO FUS STA 1108.0 INCLUDING
FUS STA 458.0E TO 618.0E FORWARD PLUG
FUS STA 1058.0E TO 1178.0E AFT PLUG

STRINGER LOCATION CHART

NOTE

STRUCTURAL FUSELAGE STATIONS ARE USED ON ALL ENGINEERING DRAWINGS. THE SUFFIX E DENOTES STRUCTURAL FUSELAGE STATIONS ADDED FOR THE C-141B AIRPLANE. LOADING STATIONS ARE MARKED BY INDIVIDUAL DECALS ON THE AIRPLANE INTERIOR AT APPROPRIATE POINTS.

THE LOADING STATION/FUSELAGE STATION (STRUCTURAL) CONVERSION CHART IS LOCATED TWO PLACES IN THE AIRPLANE ON THE LEFT SIDE AT FUSELAGE STATION 538 AND FUSELAGE STATION 1118. COMPARISON BETWEEN STRUCTURAL FUSELAGE STATIONS AND LOADING STATIONS CAN BE MADE USING THIS CHART.

ALL LOCATION REFERENCES MADE IN THIS T O ARE TO STRUCTURAL FUSELAGE STATIONS.

Fuselage Stations - Compartment Diagram (Sheet 3 of 3)

CODE

AS	= AILERON STATION	OWBRS	= OUTBOARD WING BOX RIB STATION
BL	= BUTTOCK LINE	OWLES	= OUTBOARD WING LEADING EDGE STATION
ES	= ELEVATOR STATION	PPS	= POWER PLANT STATION
FUS STA	= FUSELAGE STATION	PPWL	= POWER PLANT WATER LINE
HSFSS	= HORIZONTAL STABILIZER FORWARD SPAR STATION	RS	= RUDDER STATION
HSRSS	= HORIZONTAL STABILIZER REAR SPAR STATION	VSCSS	= VERTICAL STABILIZER CENTER SPAR STATION
IFS	= INBOARD FLAP STATION	VSFSS	= VERTICAL STABILIZER FORWARD SPAR STATION
IWBRS	= INBOARD WING BOX RIB STATION	WL	= WATERLINE
IWLES	= INBOARD WING LEADING EDGE STATION	WS	= WING STATION
OFS	= OUTBOARD FLAP STATION		

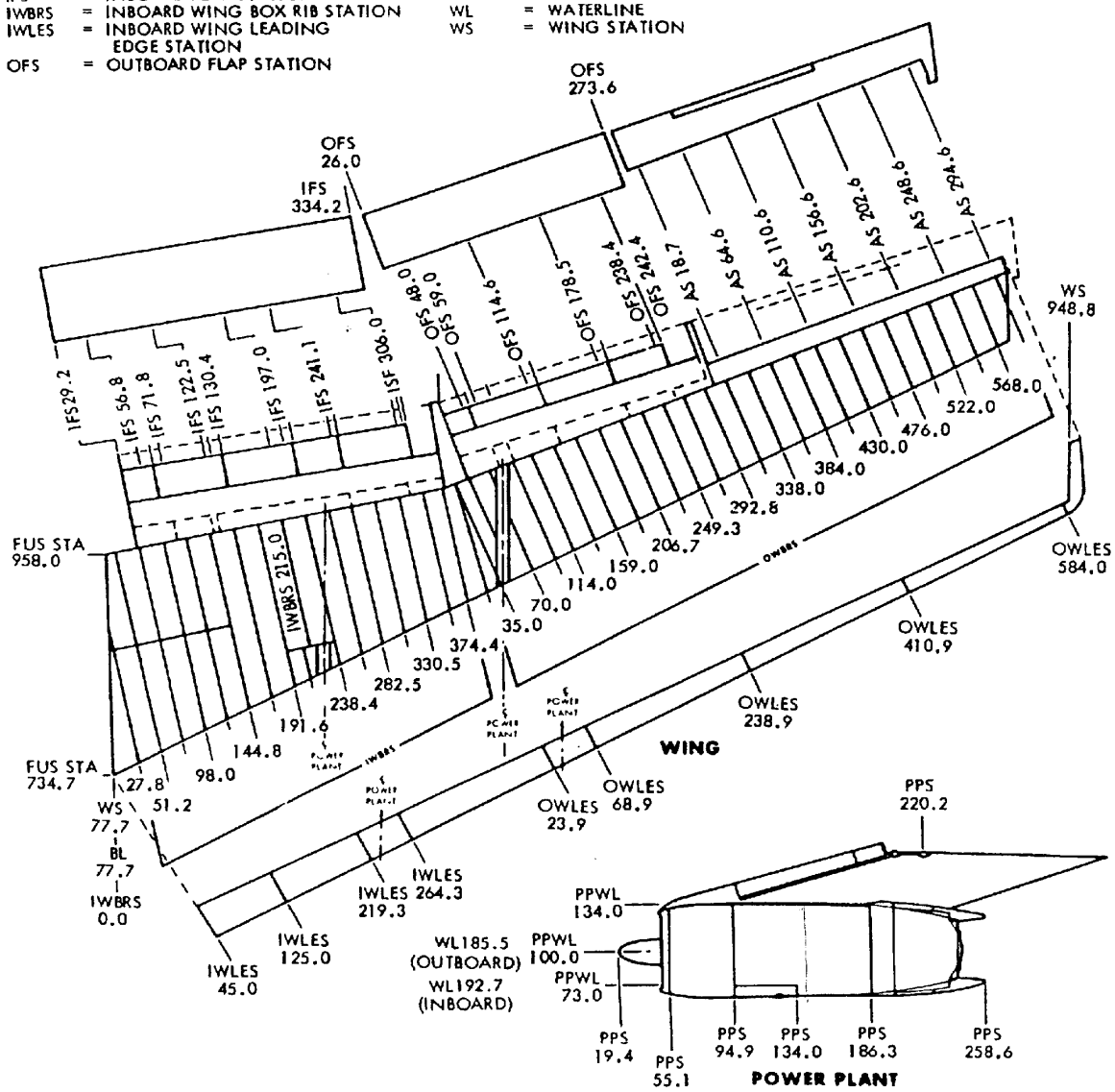

Wing and Engine Stations

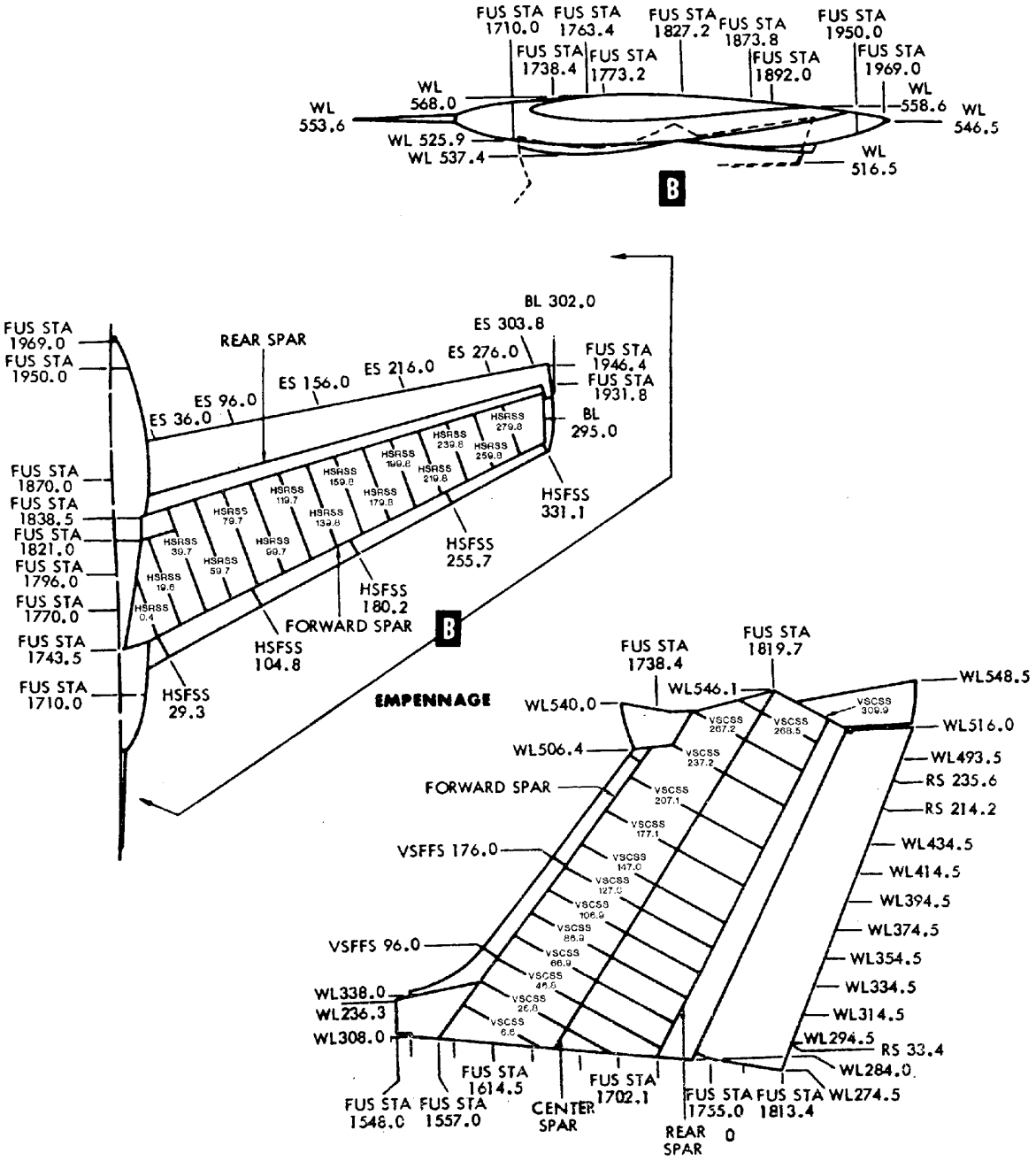

Empennage Stations

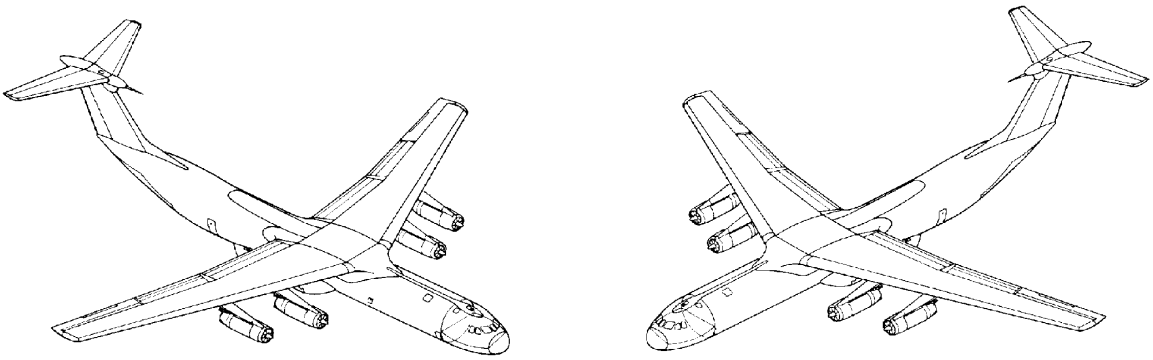

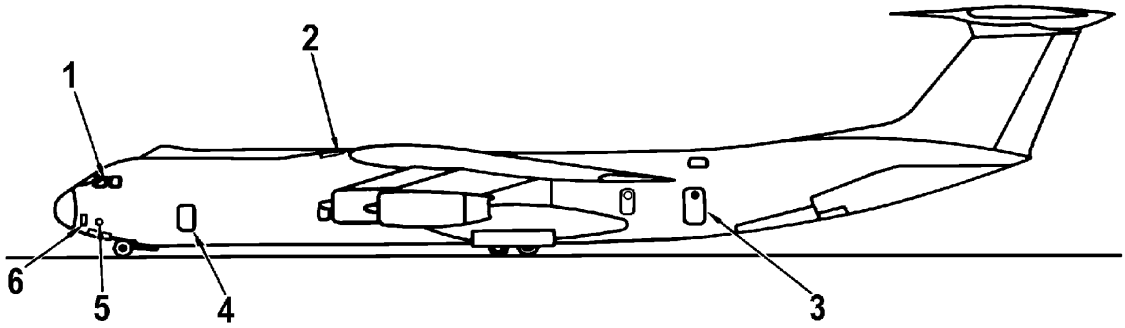

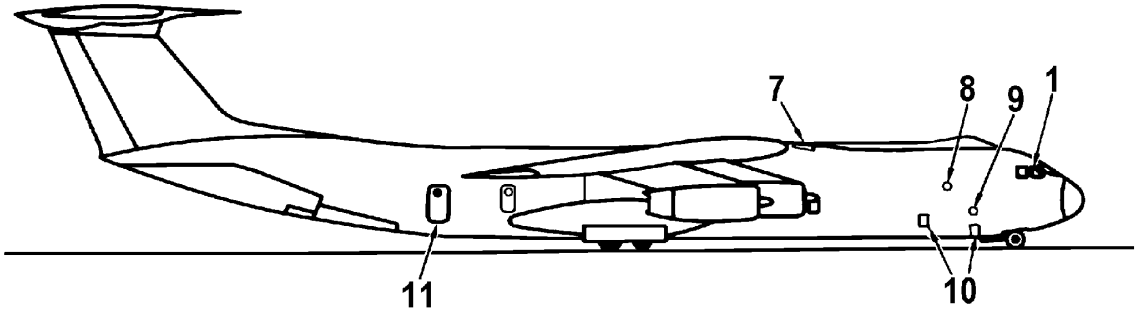

Access & Inspection Provisions - Overview (Sheet 1 of 4)

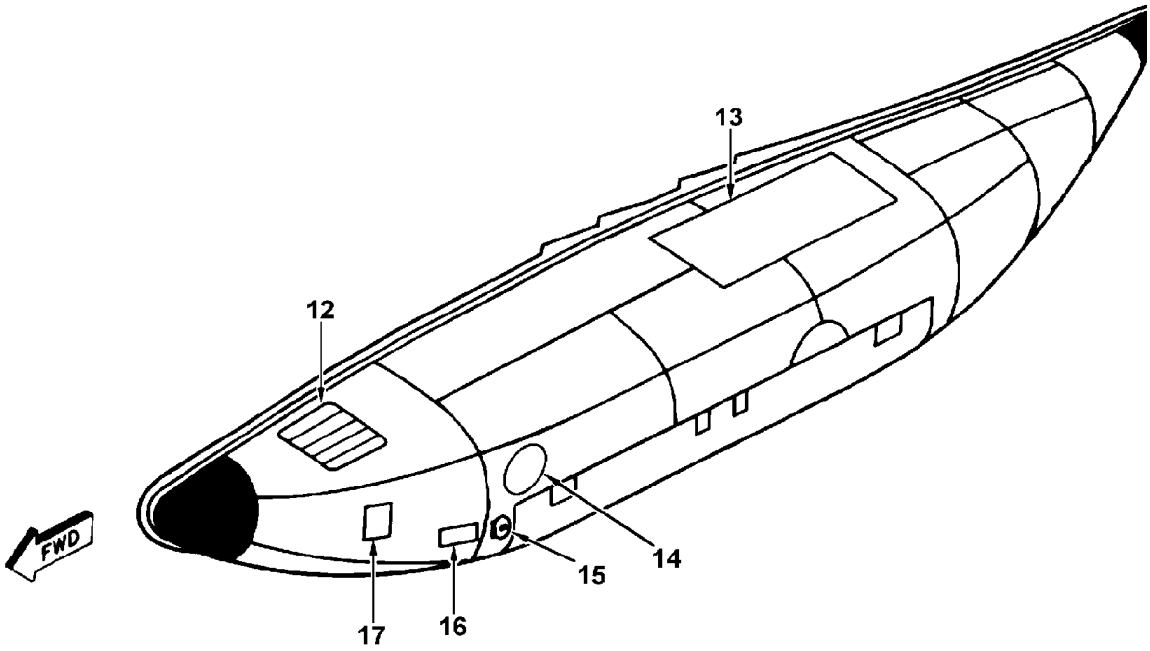

VIEW LOOKING DOWN
LEFT-HAND MAIN LANDING GEAR POD

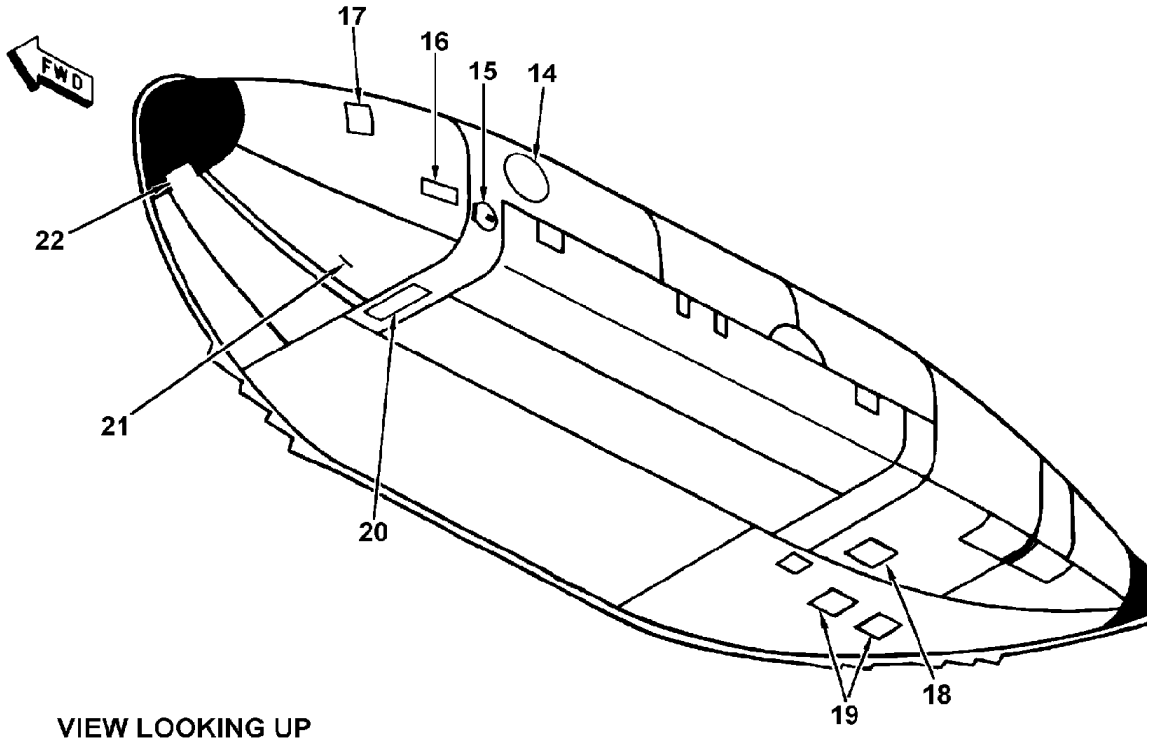

VIEW LOOKING UP
LEFT-HAND MAIN LANDING GEAR POD

Access & Inspection Provisions - Overview (Sheet 2 of 4)

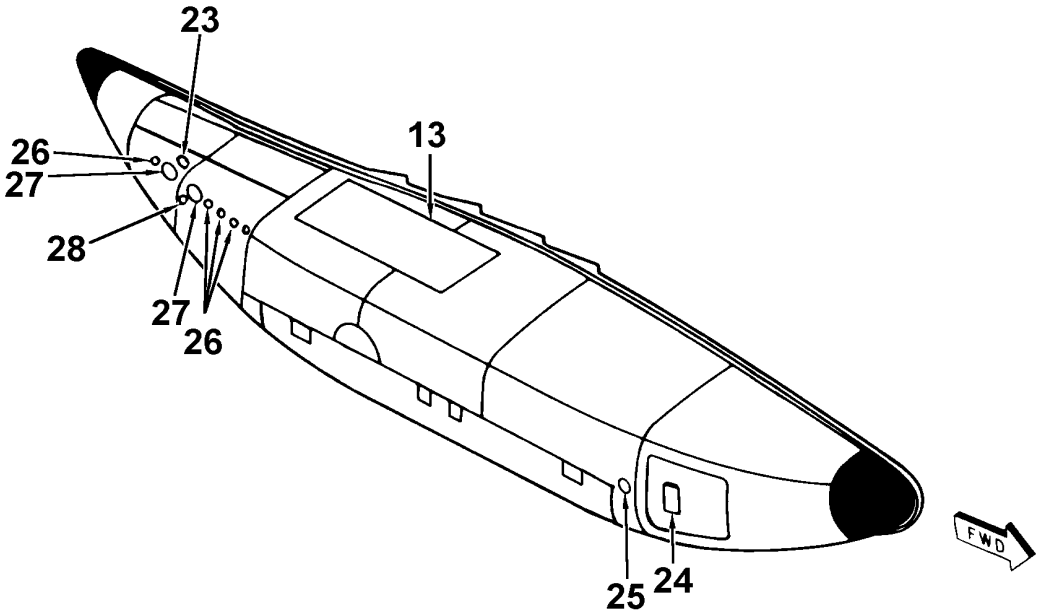

VIEW LOOKING DOWN
RIGHT-HAND MAIN LANDING GEAR POD

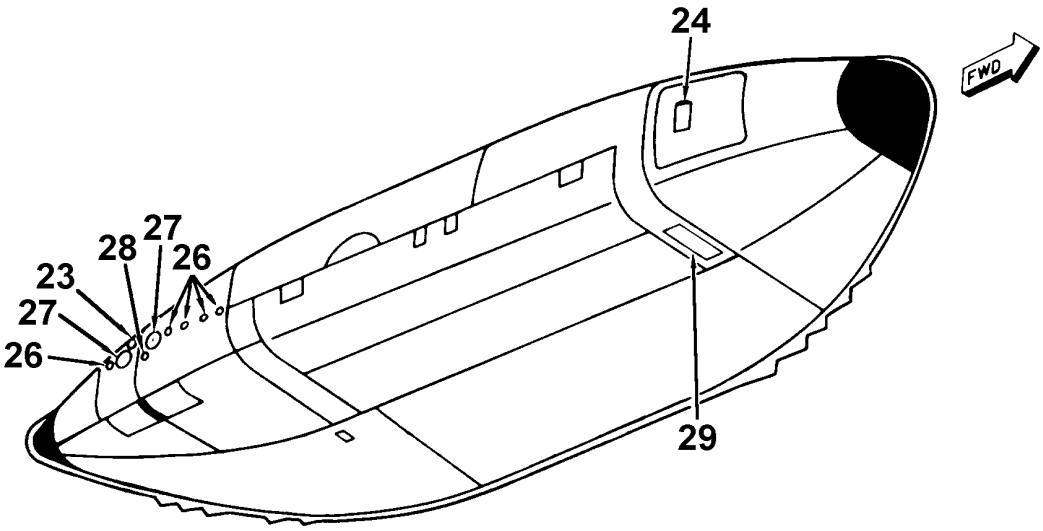

VIEW LOOKING UP
RIGHT-HAND MAIN LANDING GEAR POD

Access & Inspection Provisions - Overview (Sheet 3 of 4)

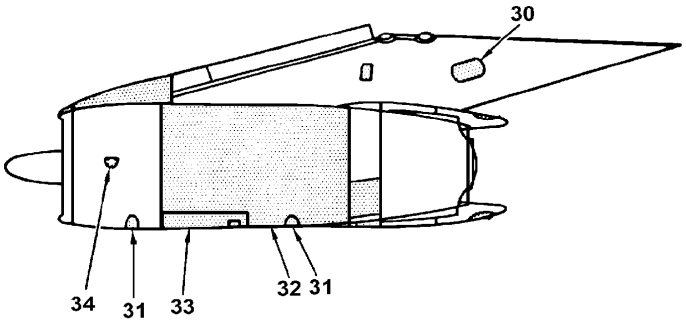

LEFT-HAND SIDE

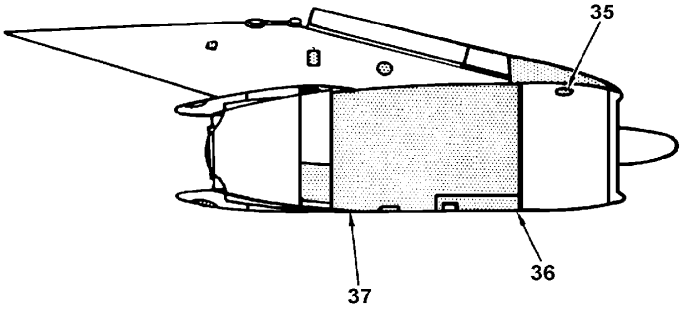

RIGHT-HAND SIDE

NOTE

1 AIRPLANE AF64-0624 AND UP.

2 AIRPLANE AF61-2775 THROUGH 64-0623.

1. CLEAR VISION WINDOW
2. REFRIGERATION UNIT ACCESS PANEL
3. LEFT HAND TROOP DOOR
4. CREW DOOR
5. INTERPHONE JACK ACCESS DOOR
6. CREW OXYGEN FILLER ACCESS DOOR
7. REFRIGERATION UNIT ACCESS PANEL
8. GROUND AIR CONDITIONING CONNECTOR ACCESS DOOR
9. EXT. ELECTRICAL POWER RECEPTACLE ACCESS DOOR
10. TOILET DRAIN ACCESS DOOR
11. RIGHT HAND TROOP DOOR
12. AUXILIARY POWER UNIT AIR INLET DOOR
13. MAIN LANDING GEAR SHOCK STRUT DOOR
14. AUXILIARY POWER UNIT EXHAUST OUTLET
15. INTERPHONE JACK ACCESS DOOR (LH)
16. AUXILIARY POWER UNIT FIRE DOOR
17. AUXILIARY POWER UNIT INSPECTION AND SERVICING DOOR
18. JACK PAD ACCESS DOOR
19. RADAR ALTIMETER RECEIVER AND TRANSMITTER COVER PLATE
20. NO. 2 HYDRAULIC SYSTEM GROUND TEST CONNECTION ACCESS DOOR
21. AUXILIARY POWER UNIT OUTBOARD ACCESS DOOR
22. PNEUMATIC STARTER CONNECTION ACCESS DOOR (APU)
23. INTERPHONE JACK ACCESS DOOR 2
24. LIQUID OXYGEN CONVERTER INSPECTION AND SERVICING DOOR
25. INTERPHONE JACK ACCESS DOOR 1
26. STATIC GROUND RECEPTACLE
27. SINGLE POINT REFUELING ADAPTER
28. SINGLE POINT REFUELING DRAIN
29. NO. 1 HYDRAULIC SYSTEM GROUND TEST CONNECTION ACCESS DOOR
30. FIRE BOTTLE ACCESS DOOR (NO. 1 AND NO. 4 PYLONS)
31. FIRE EXTINGUISHING ACCESS DOOR
32. ENGINE ACCESS LH DOOR (AFT COWL PANEL)
33. ENGINE ACCESSORIES ACCESS LH DOOR
34. CSD OIL TANK FILLER ACCESS DOOR
35. ENGINE OIL TANK FILLER ACCESS DOOR
36. ENGINE ACCESSORIES ACCESS RH DOOR
37. ENGINE ACCESS RH DOOR (AFT COWL PANEL)

Access & Inspection Provisions - Overview (Sheet 4 of 4)

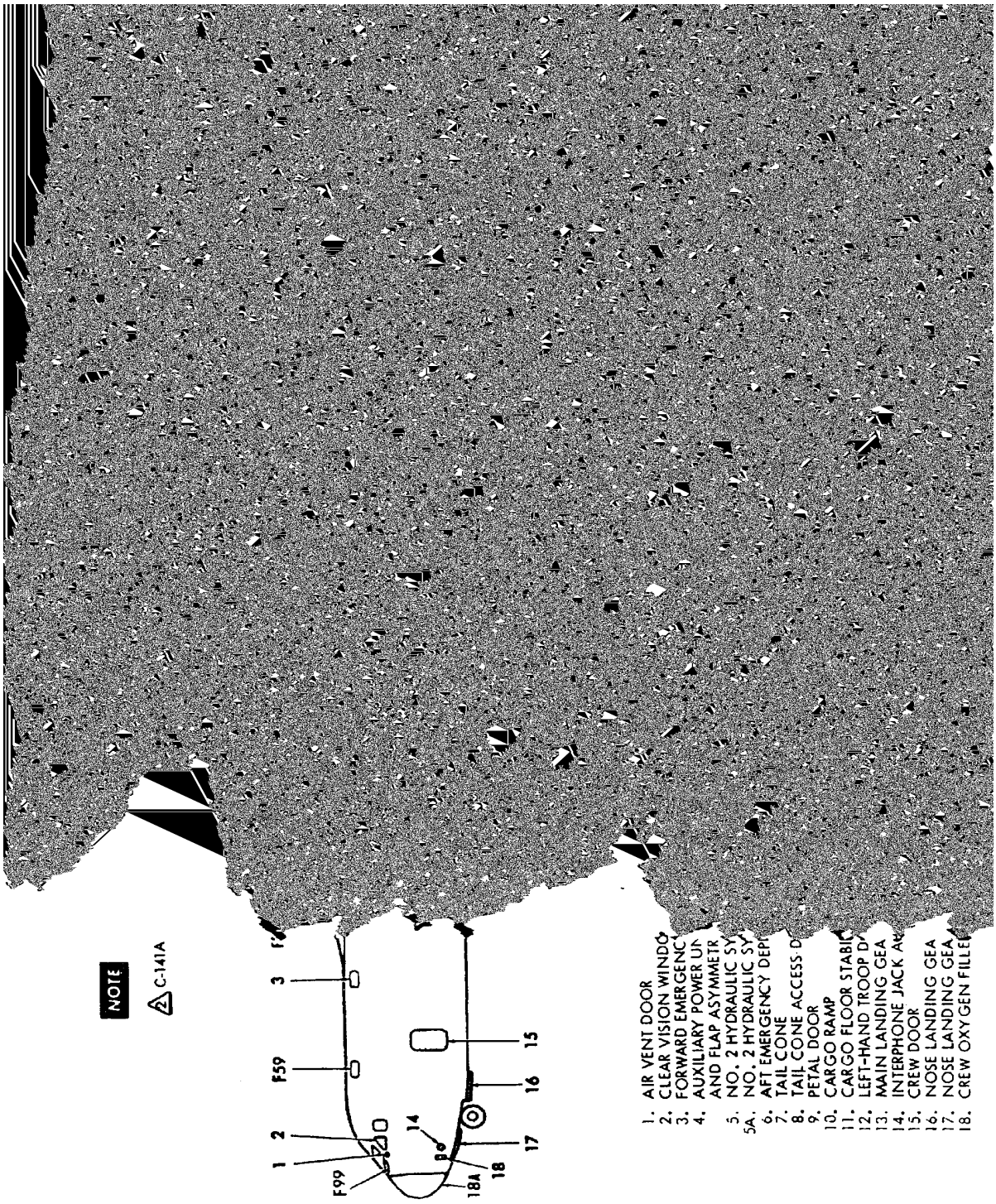

Access & Inspection Provisions - Detailed (Sheet 1 of 9)

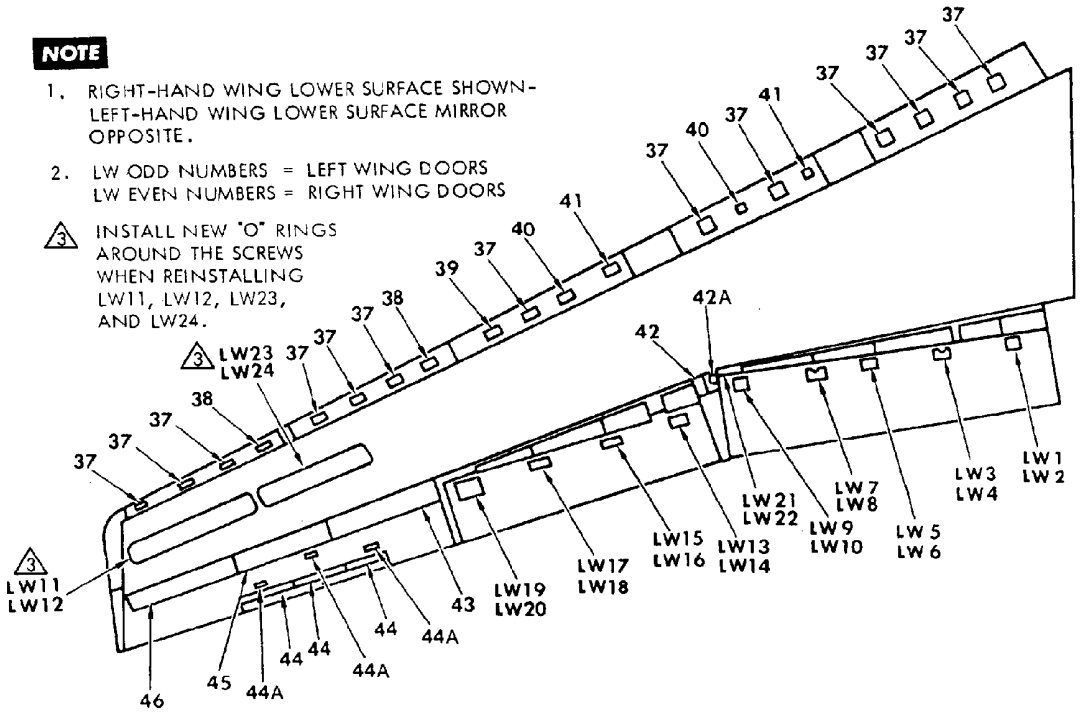

37. BLOWOUT AND ACCESS DOOR
38. DIFFUSER DISCOUNNECT ACCESS DOOR
39. ANTI-ICE VALVE ACCESS DOOR
40. ANTI-ICE TEMPERATURE SENSOR ACCESS DOOR
41. ANTI-ICE VALVE DIFFUSER DISCONNECT ACCESS DOOR
42. LANDING LIGHT ACCESS DOOR
42A. SPOILER ACTUATOR SHUTOFF ACCESS DOOR
43. AILERON HINGE FITTING INBOARD ACCESS DOOR
44. SEAL AND TAB SERVICE ACCESS DOOR
44A. AILERON SERVOTAB DAMPER ACCESS DOOR
45. AILERON HINGE FITTING CENTER ACCESS DOOR
46. AILERON HINGE FITTING OUTBOARD ACCESS DOOR

LW14. FLAP CARRIAGE TRACK ACCESS PANEL
LW15. FLAP ACTUATOR ACCESS PANEL
LW16. FLAP ACTUATOR ACCESS PANEL
LW17. FLAP ACTUATOR ACCESS PANEL
LW18. FLAP ACTUATOR ACCESS PANEL
LW19. FLAP CARRIAGE TRACK ACCESS PANEL
LW20. FLAP CARRIAGE TRACK ACCESS PANEL
LW21. FLAP AND SPOILER CONTROL ACCESS DOOR
LW22. FLAP AND SPOILER CONTROL ACCESS DOOR
LW23. NO. 1 MAIN FUEL TANK INBOARD ACCESS DOOR
LW24. NO. 4 MAIN FUEL TANK INBOARD ACCESS DOOR
PP3L. NOSE FAIRING
PP4L. FIRE EXTINGUISHING ACCESS DOOR
PP5L. BLOWOUT DOOR
PP6L. FIRE EXTINGUISHING ACCESS DOOR
PP7L. CSD OIL COOLER ACCESS DOOR
PP8. OIL COOLER BY-PASS VALVE ACCESS DOOR
PP9. THRUST REVERSER OVERCENTER LOCK ACCESS DOOR
PP10. THRUST REVERSER OVERCENTER LOCK ACCESS DOOR
PP11. ENGINE OIL COOLER ACCESS DOOR
PP12. THRUST REVERSER REGULATOR VALVE ACCESS DOOR
PP13R. BLOWOUT DOOR
PP14R. BLOWOUT DOOR
PP15L. FIRE BOTTLES ACCESS DOOR (NO. 1 AND 4 PYLONS)
PP16L. BLEED AIR SHUTOFF VALVE ACCESS DOOR
PP16R. BLEED AIR SHUTOFF VALVE ACCESS DOOR
PP17L. PYLON UPPER COVER ACCESS PANEL
PP17R. PYLON UPPER COVER ACCESS PANEL
PP24R. EPR TRANSMITTER AND FIRE DETECTOR ACCESS DOOR
UW1. CENTER WING ACCESS DOOR
UW3. NO. 2 MAIN FUEL TANK ACCESS DOOR
UW4. NO. 3 MAIN FUEL TANK ACCESS DOOR
UW5. NO. 2 AUXILIARY FUEL TANK ACCESS DOOR
UW6. NO. 3 AUXILIARY FUEL TANK ACCESS DOOR
UW7. NO. 2 EXTENDED RANGE FUEL TANK ACCESS DOOR
UW8. NO. 3 EXTENDED RANGE FUEL TANK ACCESS DOOR
UW9. NO. 1 EXTENDED RANGE FUEL TANK ACCESS DOOR
UW10. NO. 4 EXTENDED RANGE FUEL TANK ACCESS DOOR

Access & Inspection Provisions - Detailed (Sheet 7 of 9)

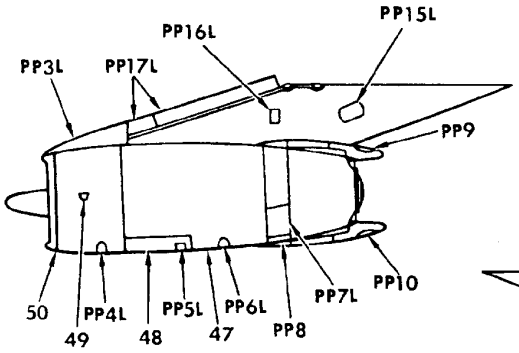

LEFT-HAND SIDE

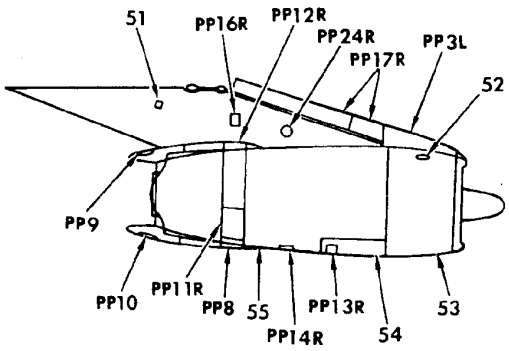

RIGHT-HAND SIDE

47. ENGINE ACCESS LH DOOR (AFT COWL PANEL)
48. ENGINE ACCESSORIES ACCESS LH DOOR
49. CSD OIL TANK FILLER ACCESS DOOR
50. LH FORWARD COWL PANEL
51. H.R.D. PRESSURE GAGE INSPECTION DOOR (NO. 1 AND 4 PYLONS)
52. ENGINE OIL TANK FILLER ACCESS DOOR
53. RH FORWARD COWL PANEL
54. ENGINE ACCESSORIES ACCESS RH DOOR
55. ENGINE ACCESS RH DOOR (AFT COWL PANEL)
56. VERTICAL STABILIZER TUNNEL ACCESS DOOR

UW21. FUEL JETTISON MAST SUPPORT ACCESS PANEL
UW22. FUEL JETTISON MAST SUPPORT ACCESS PANEL
UW23. AILERON ACTUATOR AND SERVO BOOSTER ACCESS PANEL
UW24. AILERON ACTUATOR AND SERVO BOOSTER ACCESS PANEL
UW25. AILERON ATTACH ACCESS PANEL
UW26. AILERON ATTACH ACCESS PANEL
UW27. COMPASS TRANSMITTER AND ATTACH FASTENER ACCESS DOOR
UW28. COMPASS TRANSMITTER AND ATTACH FASTENER ACCESS DOOR
UW35. AILERON TRIM TAB CONTROL ACCESS PANEL
UW36. AILERON TRIM TAB CONTROL ACCESS PANEL
UW37. AIR CONDITION PRESSURE REGULATOR VALVE ACCESS DOOR
UW38. AIR CONDITION PRESSURE REGULATOR VALVE ACCESS DOOR
UW39. NO. 1 AUXILIARY FUEL TANK ACCESS DOOR
UW40. NO. 4 AUXILIARY FUEL TANK ACCESS DOOR

VS1. RUDDER HINGE ACCESS PANEL
VS3. RUDDER HINGE ACCESS PANEL
VS5. RUDDER HINGE ACCESS PANEL
VS7. RUDDER HINGE ACCESS PANEL
VS9. RUDDER HINGE ACCESS PANEL
VS11. RUDDER HINGE AND TORQUE TUBE ACCESS PANEL
VS13. RUDDER HINGE ACCESS DOOR
VS14. RUDDER HINGE ACCESS DOOR
VS15. RUDDER HINGE ACCESS DOOR
VS17. RUDDER HINGE ACCESS DOOR
VS19. RUDDER HINGE ACCESS DOOR
VS21. RUDDER HINGE ACCESS DOOR
VS23. RUDDER TORQUE TUBE ACCESS DOOR

Access & Inspection Provisions - Detailed (Sheet 8 of 9)

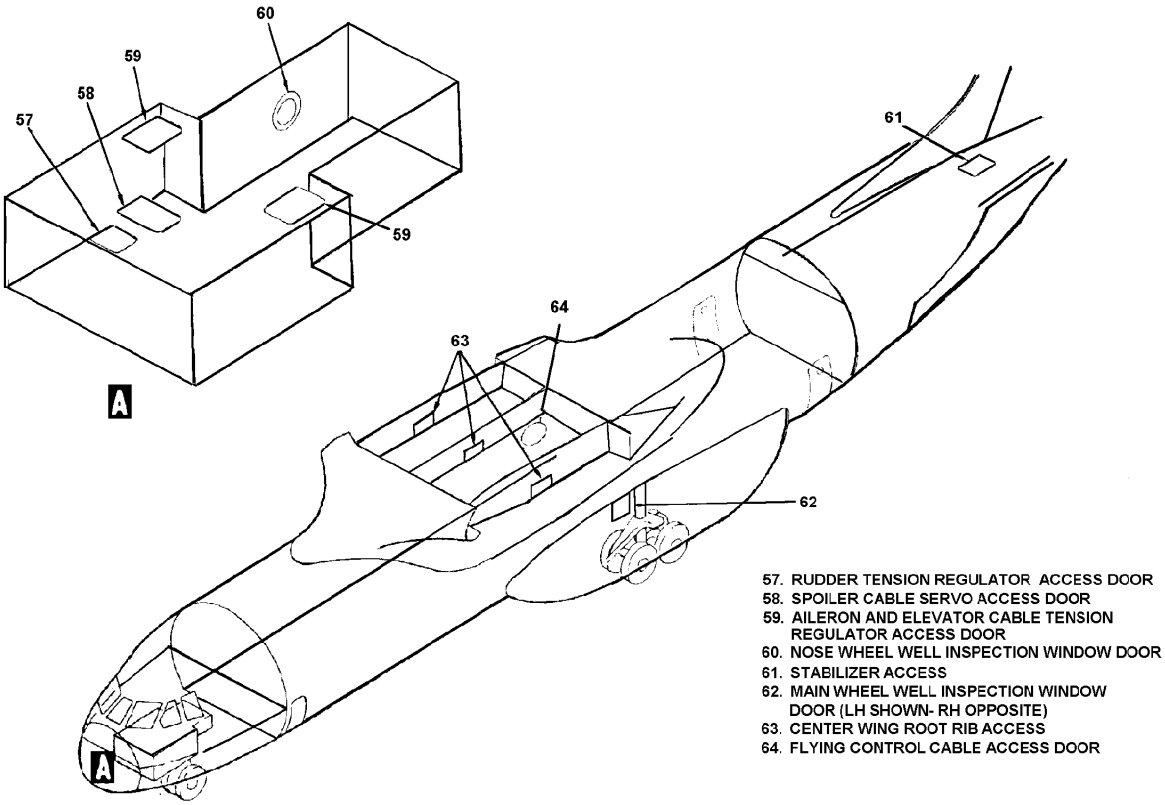

Access & Inspection Provisions - Detailed (Sheet 9 of 9)

Aircraft Interior Arrangement

The flight station and cargo compartment are pressurized. Loading is through the aft cargo door. The aircraft is fitted with a complete rapid cargo loading and tiedown system. The rapid cargo loading system uses roller conveyor sections running forward and aft in the cargo compartment. The roller conveyor channels are mounted in recesses on each side of the floor panels, with the rollers sticking up about 1-1/2 inches above the floor. When not used, the roller conveyor channels are turned over in the recesses and fit flush with the floor panels. A power winch is provided in the forward part of the compartment to winch cargo into the main compartment. The cargo tiedown system restrains cargo movement.

CREW MOVEMENT AND COMPARTMENT DIAGRAM

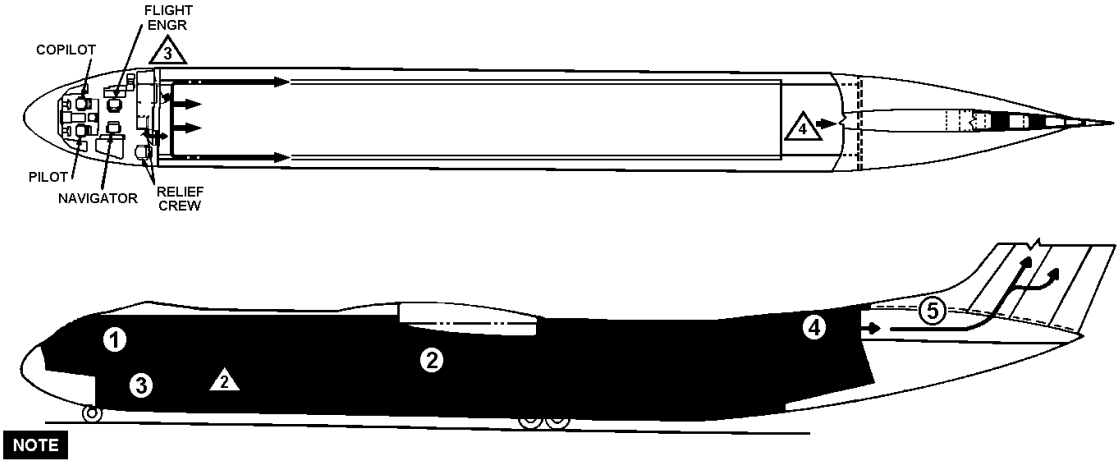

NOTE

1. WALKWAYS ARE PROVIDED FOR CREW MOVEMENT WHEN THE CARGO COMPARTMENT IS LOADED TO WIDTH CAPACITY. MOVEMENT UNDER OTHER CONDITIONS IS LIMITED BY THE CONFIGURATION OF THE LOAD.

2. ACCESS TO L.H. AND L.H. CENTER UNDERDECK EQUIPMENT. ACCESS UNDER CREW LADDDER.

3. ACCESS TO R.H. CENTER AVIONICS UNDERDECK EQUIPMENT, BATTERY, ELECTRICAL EQUIPMENT, AND NOSE LANDING GEAR INSPECTION WINDOW. ACCESS THROUGH CREW LATRINE.

4. ACCESS TO AFT FUSELAGE UPPER DECK COMPARTMENT AND VERTICAL STABILIZER.

5. THE FOLLOWING CIRCLED ITEMS CONSTITUTE THE CABIN: 1, 2, 3, 4,

- ○ FLIGHT STATION
- ○ CARGO COMPARTMENT
- ○ FORWARD FUSELAGE UNDERDECK EQUIPMENT COMPARTMENT
- ○ AFT CARGO COMPARTMENT UPPER DECK AREA
- ○ AFT UPPER DECK COMPARTMENT
- ■ AIR CONDITIONED AND PRESSURIZED AREAS (CABIN)

Interior Arrangement (Sheet 1 of 2)

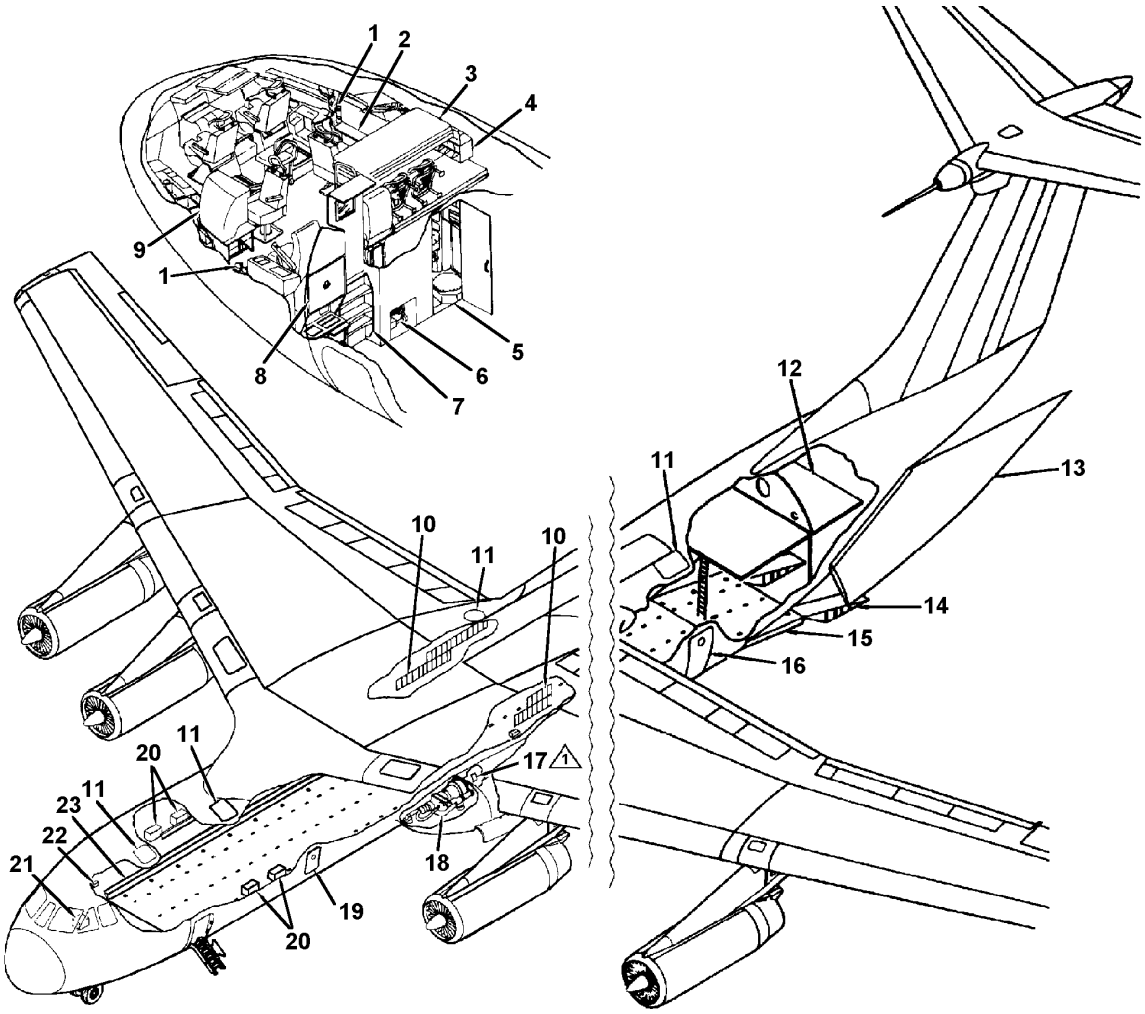

1. STOWAGE PROVISIONS: PORTABLE OXYGEN BOTTLE
2. FLIGHT ENGINEER'S STATION
3. CRE BUNKS
4. BOOK SHELF
5. LAVATORY
6. WINCH
7. FLIGHT STATION ACCESS LADDER
8. CREW GALLEY
9. NAVIGATOR'S STATION
10. STOWAGE PROVISIONS: TIE DOWN DEVICES
11. EMERGENCY ESCAPE HATCH
12. PRESSURE DOOR
13. PETAL DOOR
14. AUXILIARY LOADING RAMPS
15. LOADING RAMP
16. TROOP DOOR (TYPICAL EACH SIDE)
17. EXTERNAL HYDRAULIC SYSTEM RECEPTACLE
18. AUXILIARY POWER UNIT
19. EMERGENCY SIDE EXIT (FORWARD AND AFT OF WHEEL PODS ON EACH SIDE)
20. STOWAGE PROVISIONS: TIE DOWN FITTINGS AND CHAINS
21. BATTERY (IN RH UNDERDECK RACK)
22. EXTERNAL POWER RECEPTACLE
23. WALKWAY (TYPICAL EACH SIDE OF CARGO COMPARTMENT)

Interior Arrangement (Sheet 2 of 2)

Aircraft Exterior Walkways and No-Step Areas

Certain areas on the upper surfaces of the wings, fuselage, horizontal stabilizer, and pods have been designated as walkways and NO-STEP areas. The walkway areas are selected for structural ability to withstand more weight than other areas. The walkway areas are clearly painted on the aircraft. Personnel should not walk or step in an area that is not designated as a walkway. The NO-STEP areas are so designated because the structure is not designed to withstand a person's weight or the exterior skin is too thin. The NO-STEP areas are clearly painted on the aircraft.

CAUTION

The main landing gear (MLG) outboard doors are designated as NO-STEP areas and shall not be walked or stepped on.

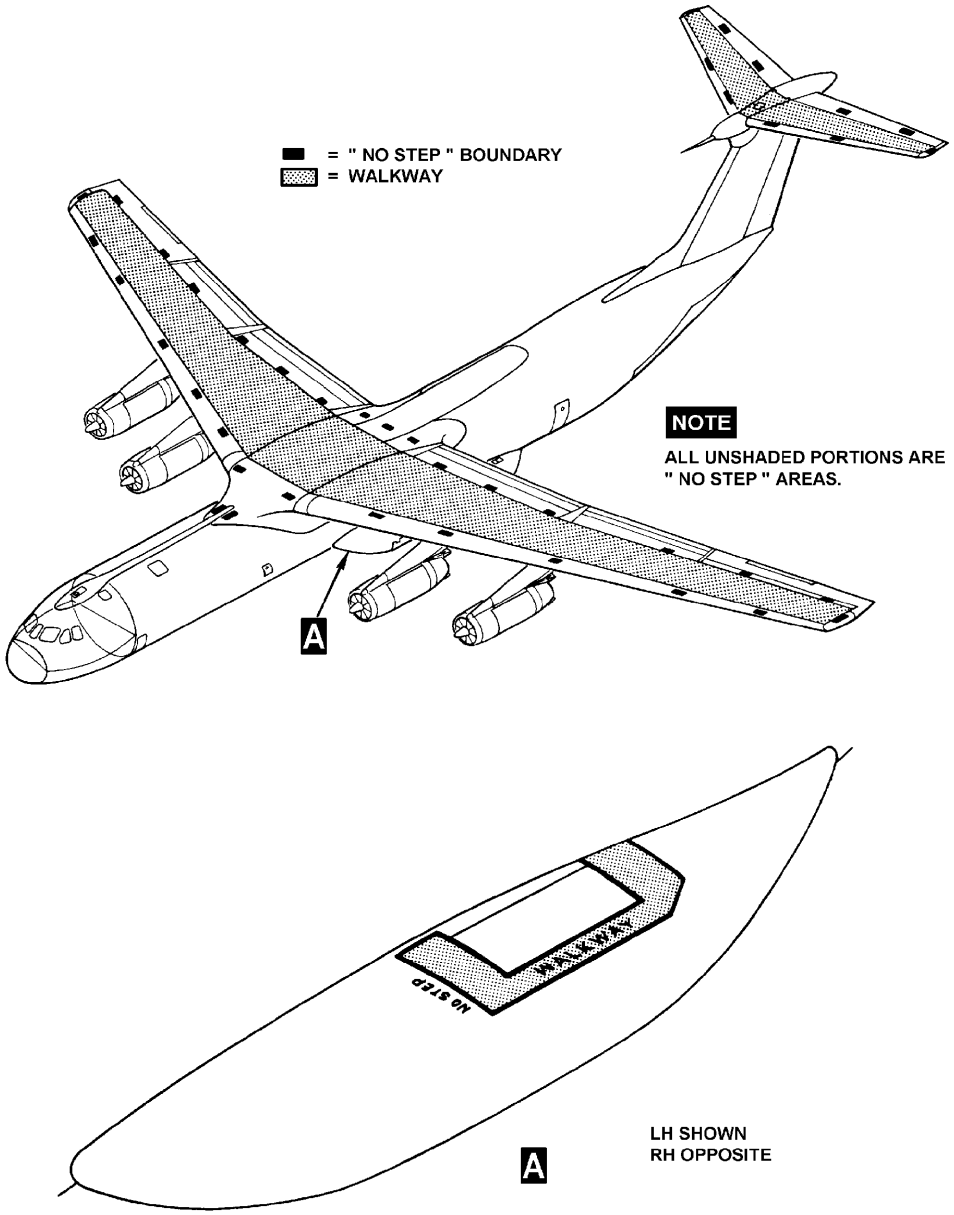

Exterior WalKways and No-Step Areas

NOTES

LIFTING AND SHORING

General

The aircraft can be jacked, with various combinations of different jacks. The jack combinations used are dependent upon the type of maintenance to be performed and the gross weight of the aircraft. This section identifies some of the jacks and special adapters (needed to perform the jacking operation) used at specific areas of the aircraft structure, while showing some of the more common jacking configurations.

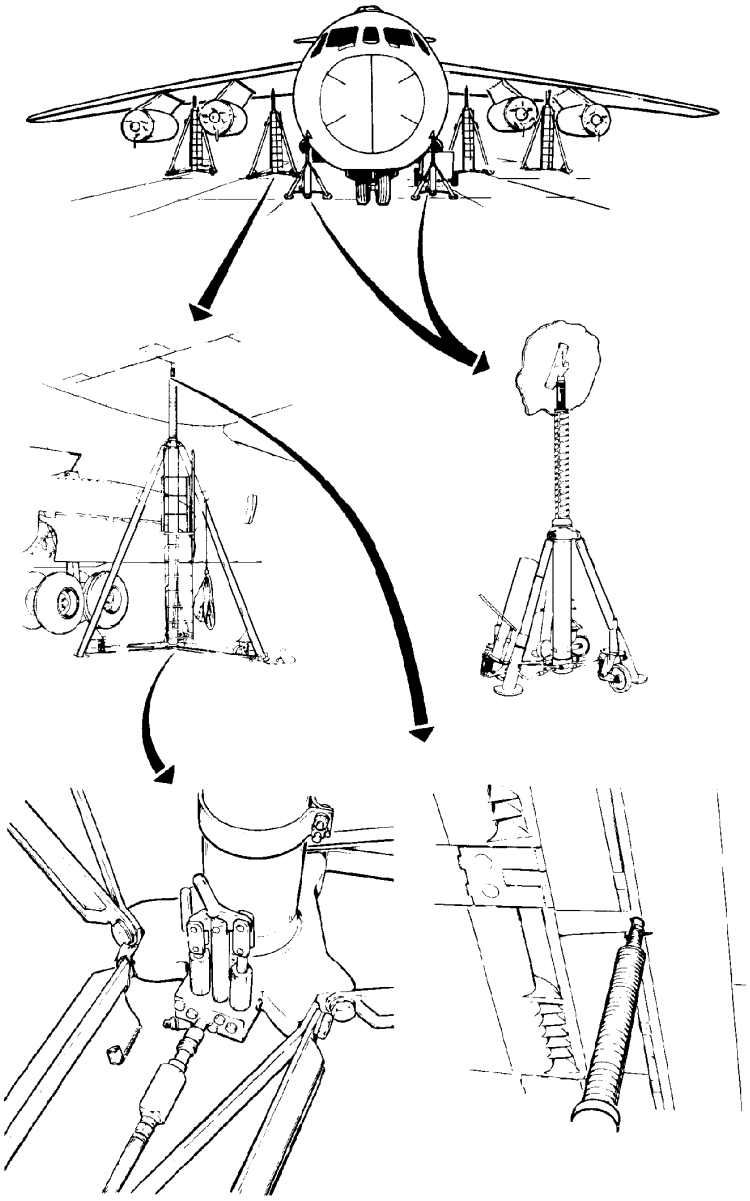

Typical Jacking Configuration

Jacking Points and Adapters

There is an integral or built-in jack pad on the bottom of each main gear axle and one on the nose gear axle. These pads are used in conjunction with types F-l, F-2, and the 3S90005(Rhino) axle jacks. Wing and fuselage tripod jacks have removable jack pads which fit into receptacles. Jack pad adapters are not an integral part of the aircraft structure. They are stowed in the cargo compartment and are installed in their receptacles only when preparing to jack the aircraft. Wing and center fuselage jacking adapters are installed by placing them in their receptacles and rotating l/4-turn to lock them in position. The forward fuselage jacking and ballast weight adapters are installed with six bolts and washers. To attach these combination jack pad and ballast weight hangers, use antiseize compound on the bolt threads, and torque the bolts to 225 +/- 25 inch-pounds.

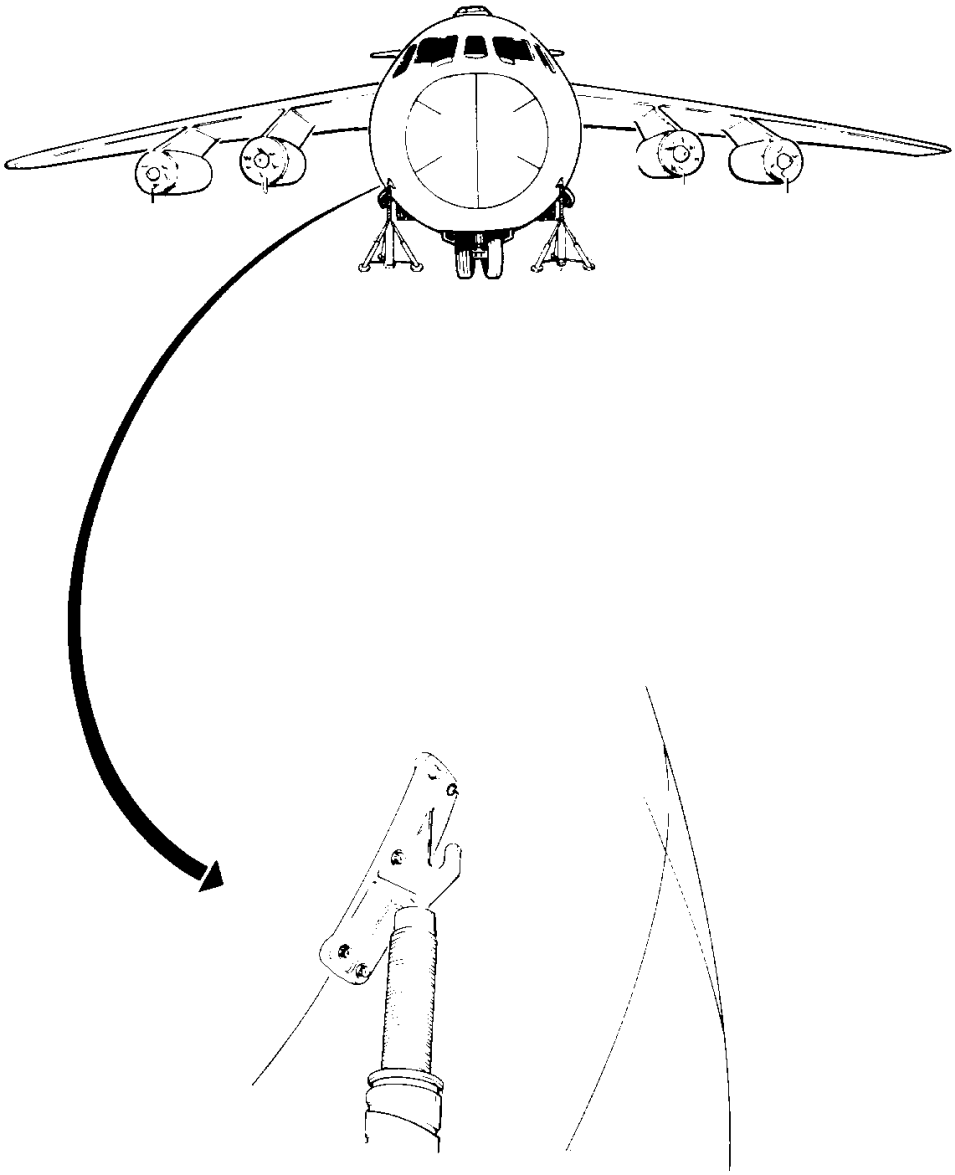

Typical Nose Jacking Configuration

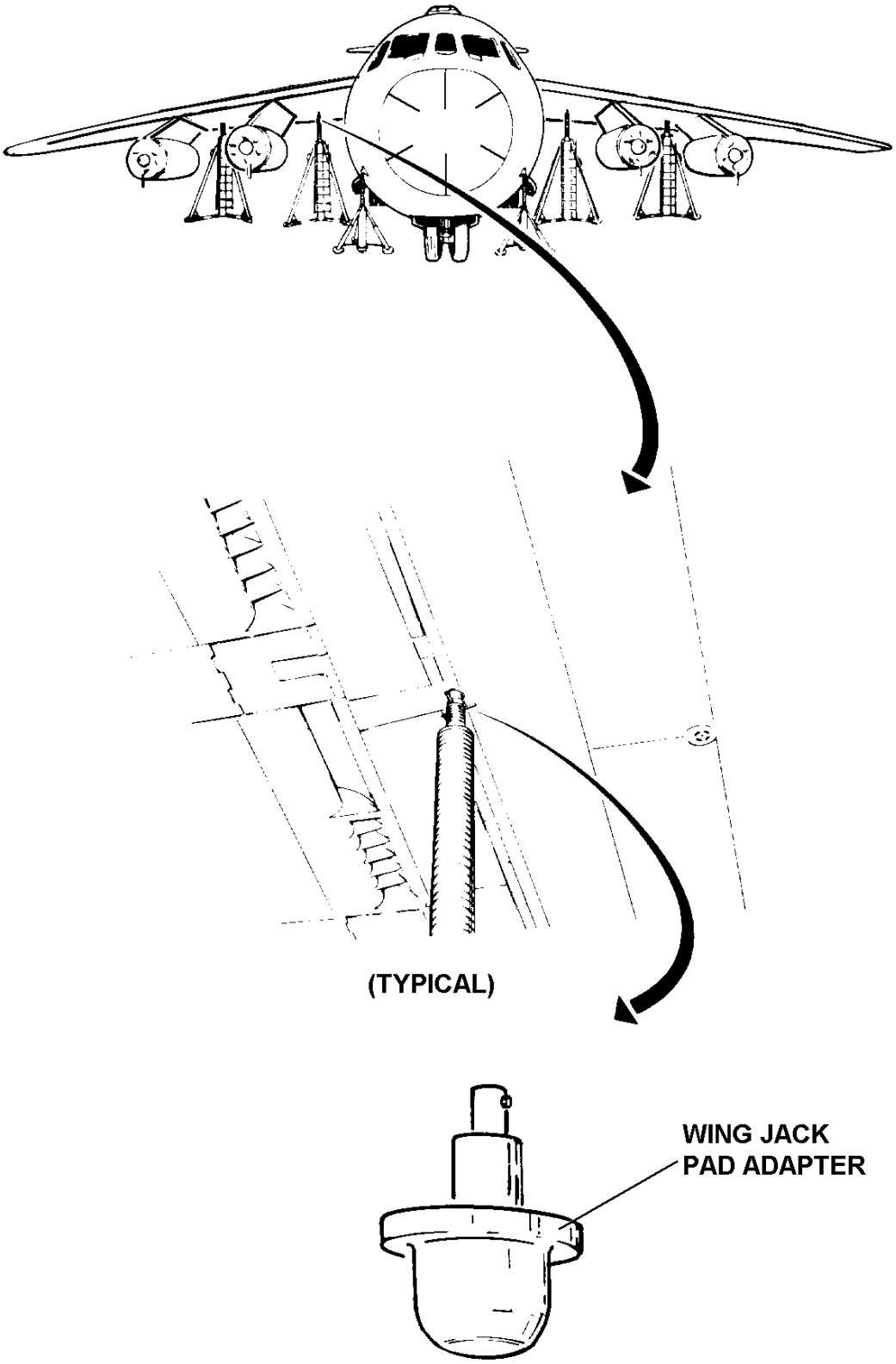

Typical Jacking Configuration

Axle Jacks

Three types of axle jacks are used: Type F-1, Type F-2, and 3S90005 (Rhino). The Type F-1 jack (rated at 20-ton capacity) is used to jack the aircraft at the nose landing gear (NLG) axle for aircraft gross weights ranging from 125,000 to 325,000 pounds when changing dual flat tires. The Type F-2 jack (rated at 35-ton capacity) is used to jack the aircraft at the main landing gear (MLG) axles for aircraft gross weights ranging from 125,000 to 325,000 pounds when both tires on the same axle are not flat. The 3S90005 (Rhino) jack (rated at 40-ton capacity) is used to jack the aircraft at either the nose gear axle or at one of the main gear axles when both tires on an axle are flat. If the aircraft gross weight and center of gravity (CG) are within allowable flying limits, any one axle can be jacked safely with an axle jack. The axle jacks can also be used to jack the complete aircraft.

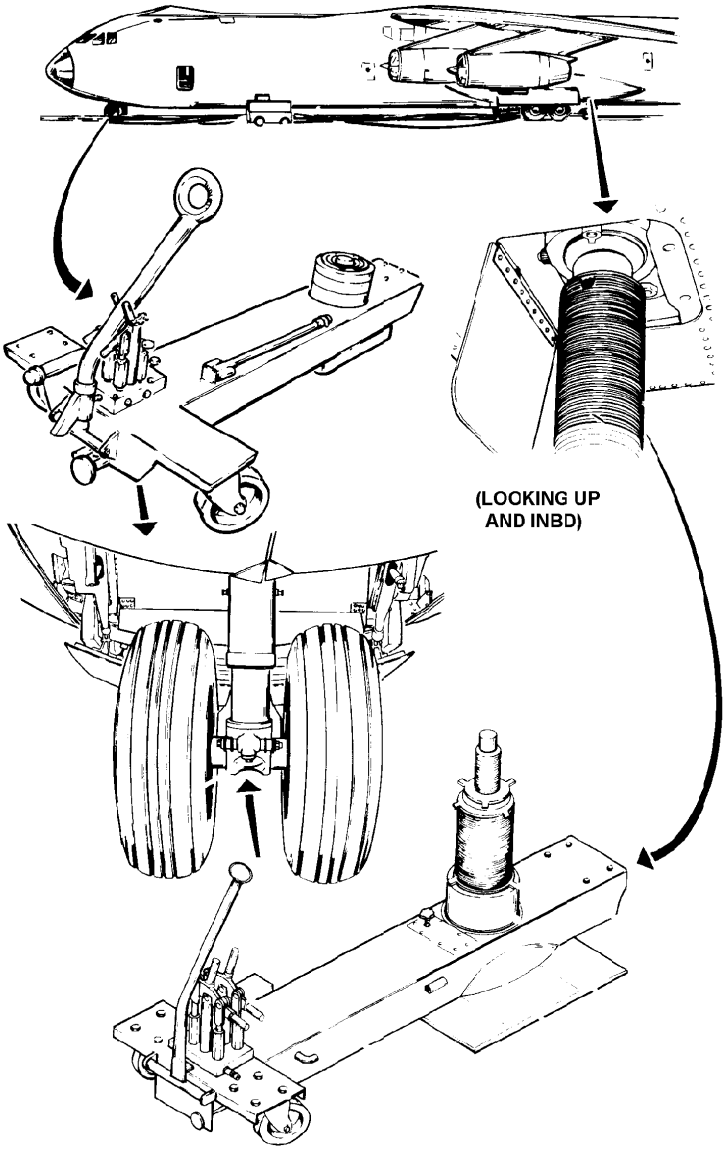

Typical Axle Jacks and Landing Gear Jacking Points

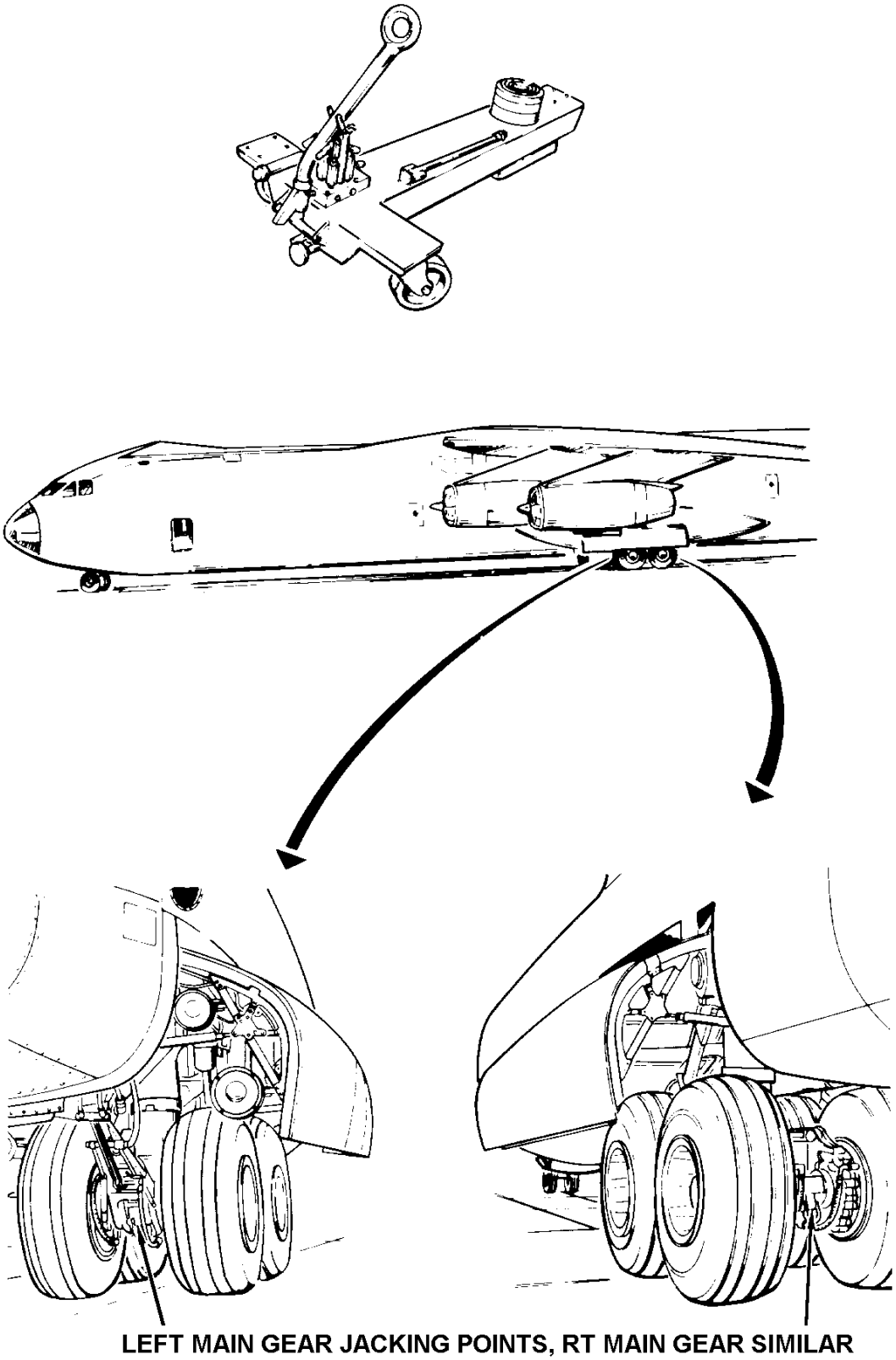

Main Landing Gear (MLG) Axle Jacking Points

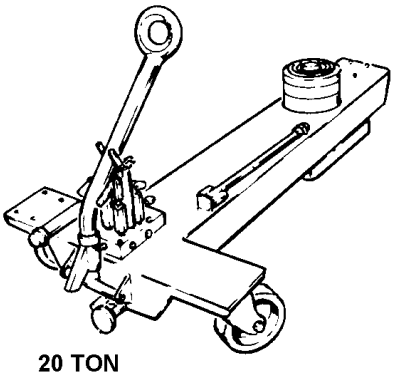

20 TON

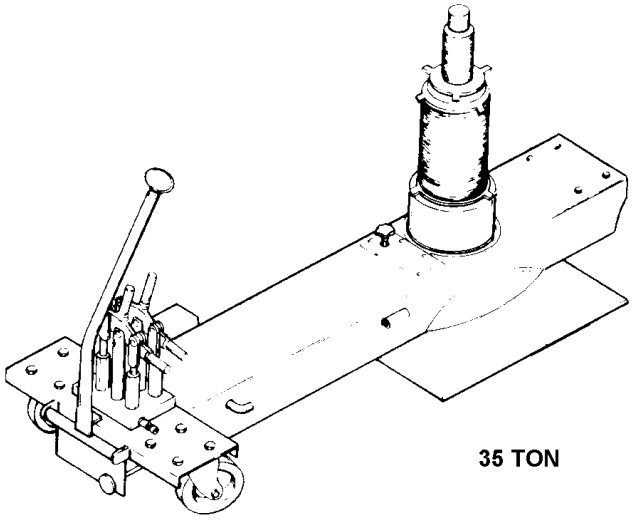

35 TON

AXLE JACKS

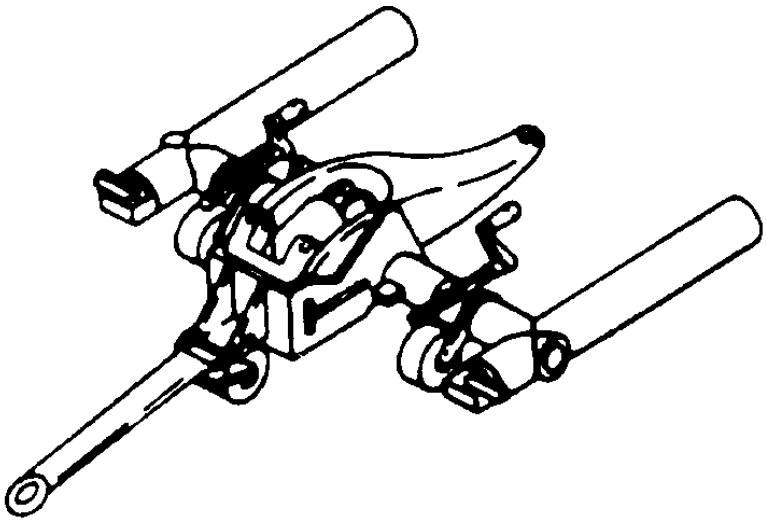

AXLE JACK (3S90005, RHINO JACK)
(FOR DUAL FLAT TIRE CONDITION)

Various Axle Jacks

Type MMU-l07/E Wing Jacks

The type MMU-107/E wing jacks are rated at 40-ton capacity. Minimum jack height is 148 inches; maximum jack height is 215 inches. The hydraulic lift extends 55 inches, and the screw extension extends 11.5 inches. A ladder and platform are included as part of the jack. The type MMU-107/E jacks must never be mixed with type B-4A wing jacks.

Wing and Fuselage Type B-4 Jacks

Type B-4A jacks are used to jack either the nose of the aircraft or the complete aircraft when gross weight does not exceed 220,000 pounds. The jacks are rated at 30-ton capacity. These jacks are used in pairs and in most cases they must be manifolded. Frequently the outboard wing jacks are used only for aircraft stabilization. When used for this purpose, they need not be manifolded and there should be just enough pressure on the jacks to keep them seated to the ground and the jackpad adapters. The type B-4A jacks should also be positioned so that the jack feet are on a firm surface and, in any case, the jack rams must be parallel with each other to minimize side loadings. Whenever possible, position each jack so that two of the feet are parallel to the centerline of the aircraft. The jacks can be built up to extend to an overall height of 200 inches; this includes the maximum screwjack dimension of 13 inches. The jack contains a manually operated ramlock nut which prevents inadvertent retraction of the jack. A setscrew in the ramlock nut provides a means of locking the nut in any position on the ram. When raising, lowering, leveling, or during any other movement of the aircraft, the set screw in the ram lock nut on all jacks should be loose and the lock nuts should be kept within two threads of the lift tube cylinder. To prevent settling after jacking is complete, screw down the lock nuts firmly to the cylinder on all jacks.

Center Fuselage Jacks

Two Model 3934, 70-ton, alligator-type jacks are used at the center fuselage jack points (FS 1058), in conjunction with the forward fuselage or nose axle jacks, to jack the airplane at gross weights up to 180,000 pounds. The jacks are used when necessary to perform maintenance functions on the landing gear, including landing gear retraction checks, leveling, weighing the aircraft, and for jacking the aircraft with flat tires.

Wing Stabilization Jacks and Fuselage Cradling

Additional wing supports and/or fuselage cradling will be required during major repairs such as wing and fuselage main frame splice removal and installation. For additional jacking and cradling instructions, refer to T.O. lC-141B-3.

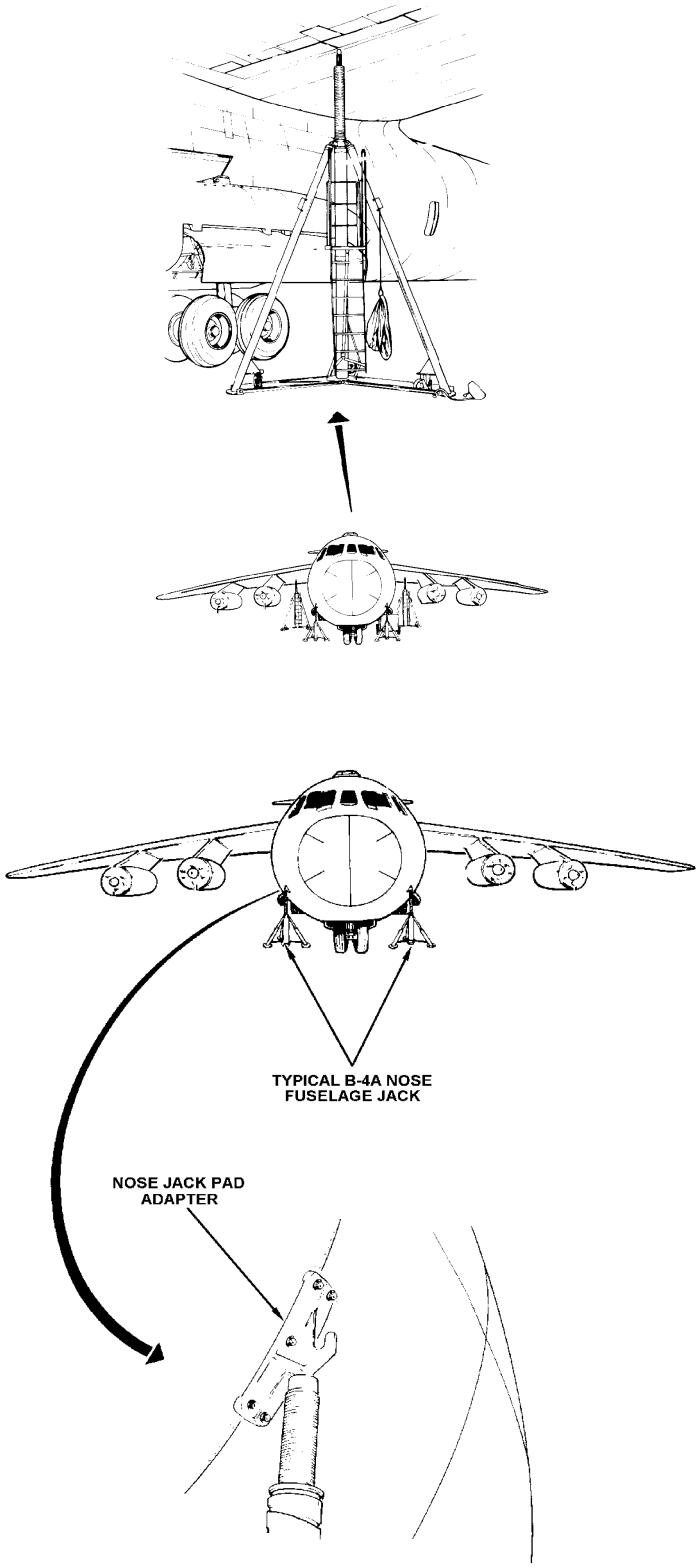

Wing and Nose Fuselage Jacks

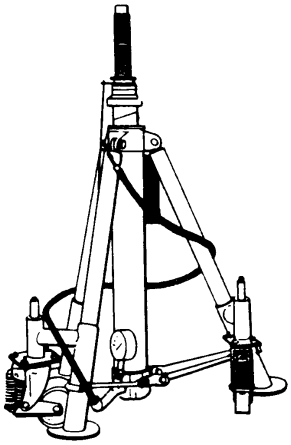

B4A NOSE JACK

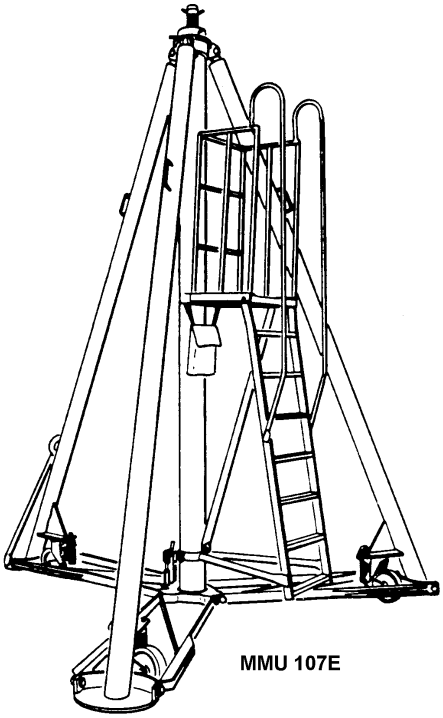

MMU 107E

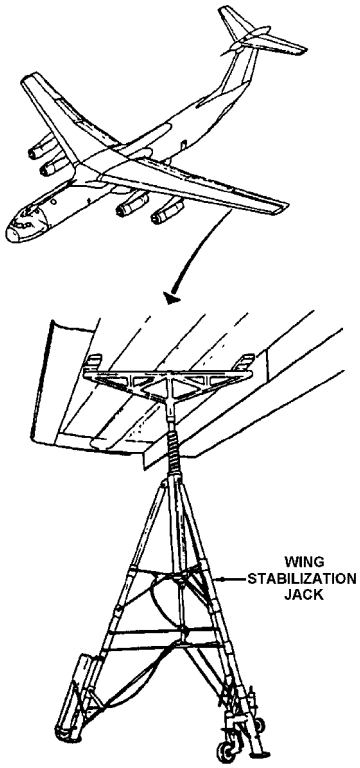

(RIGHT WING SHOWN,
LEFT WING SIMILAR)

Nose, Wing, and Stabilization Jacks

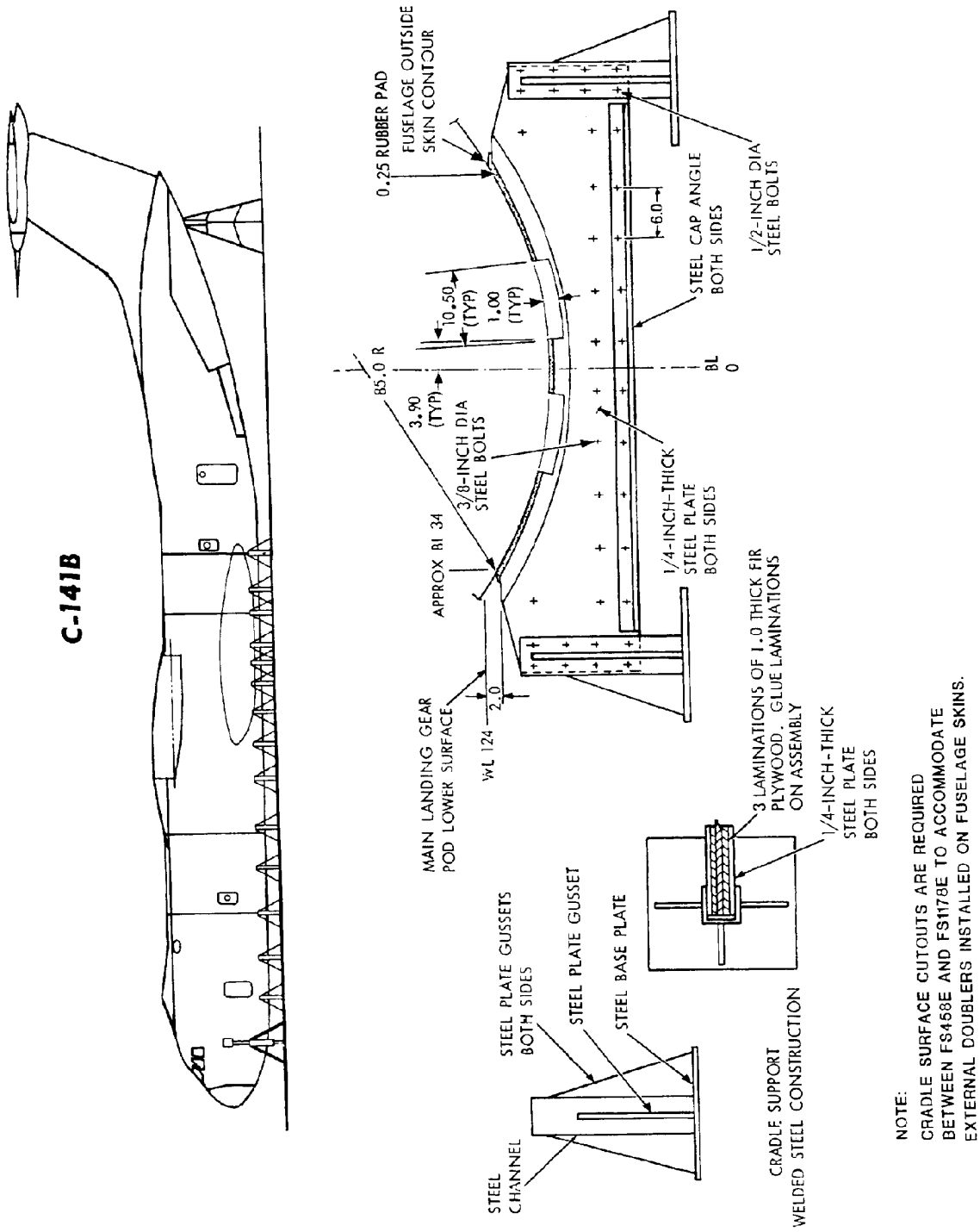

Typical Cradling Configuration

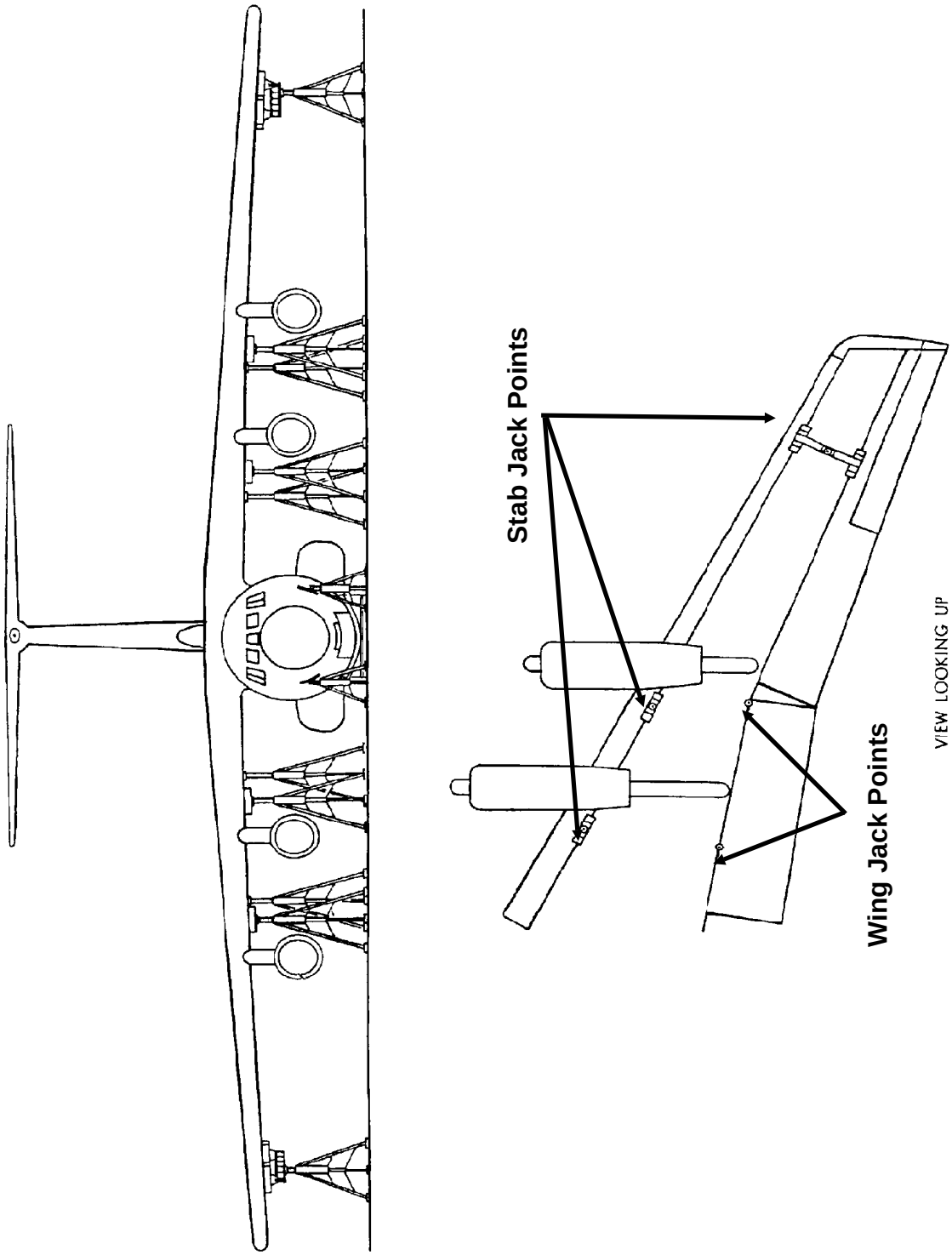

Typical Nose, Wing, and Stabilization Jacks Configuration

Nose Ballast Weights

Special 7135074 nose ballast weights are provided to maintain the aircraft center of gravity within safe jacking limits. The weights can also be used to restrain a jacked aircraft during winds or gusts. During normal maintenance operations, it is sometimes necessary to jack the aircraft with a major component such as a power plant removed. To determine if it is safe to jack the aircraft under these conditions, compute the aircraft center of gravity, and add nose ballast weight as required. Each ballast weight consists of two 1751-pound weights attached to a yoke. The yoke in turn fits onto the jacking adapter on the nose of the aircraft. One 3502 pound ballast weight can be installed on each adapter to provide a total of 7004 pounds of ballast at the nose of the aircraft. Ballast weights should be installed by using a forklift prior to positioning the forward fuselage jacks.

Jack Manifolding

To ensure proper weight distribution on the jack pads and thus prevent possible twisting of the aircraft structure, the jacks must be hydraulically manifolded. Exceptions to manifolding are noted in the applicable T.O. Normally, manifolding is done in conjunction with a Type AF/M27N-1 pumping unit; however, each set of jacks can be manifolded and operated with the hand pump by connecting the fluid reservoirs to keep the same fluid level in both jacks, and then connecting the pump outlet lines together to ensure equal pressure to each jack.

LEVELING AND WEIGHING

General

This section contains general leveling and weighing information for the C-141B aircraft.

CAUTION: When leveling the aircraft for symmetry and alignment checks, jack the aircraft through the nose fuselage and main gear jack points only. Use no support medium in contact with the empennage or wing surface; however, to ensure stability, locate wing jacks one under each outboard wing jack point. Use care to obtain 1/8-inch clearance between the jacks and the adapters. Remove all cargo from the aircraft before leveling.

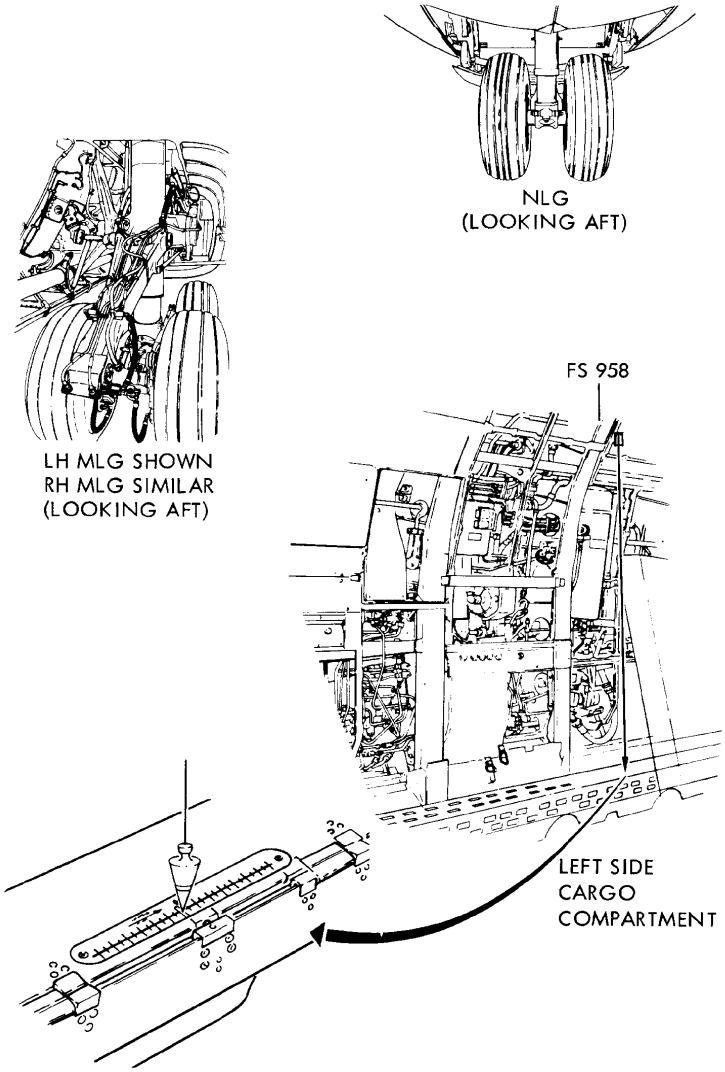

Leveling and Weighing

Leveling

The symmetry and alignment checks, except landing gear alignment, require that the aircraft be jacked and precisely leveled, laterally and longitudinally, using the preferred method described in T.O. lC-141B-3. The alternate method of leveling outlined in T.O. lC-141B-2-08JG-00-1, section 1 may be used when precision leveling is not required.

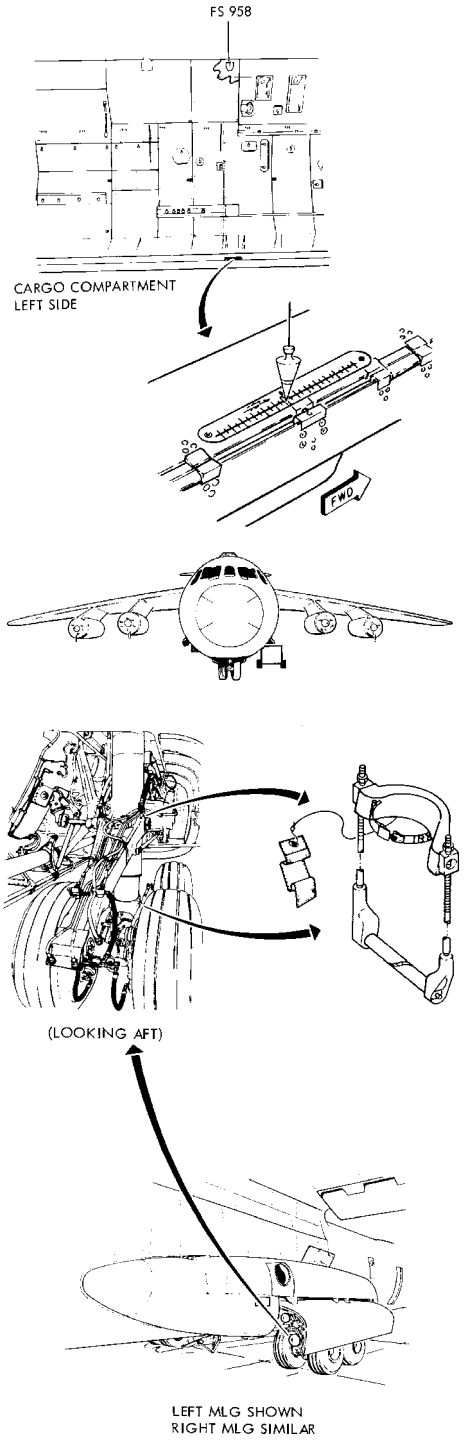

Various Leveling Components

Weighing

Weighing instructions and information is in T.O. 1C-141B-2-08JG-00-1, section 1.

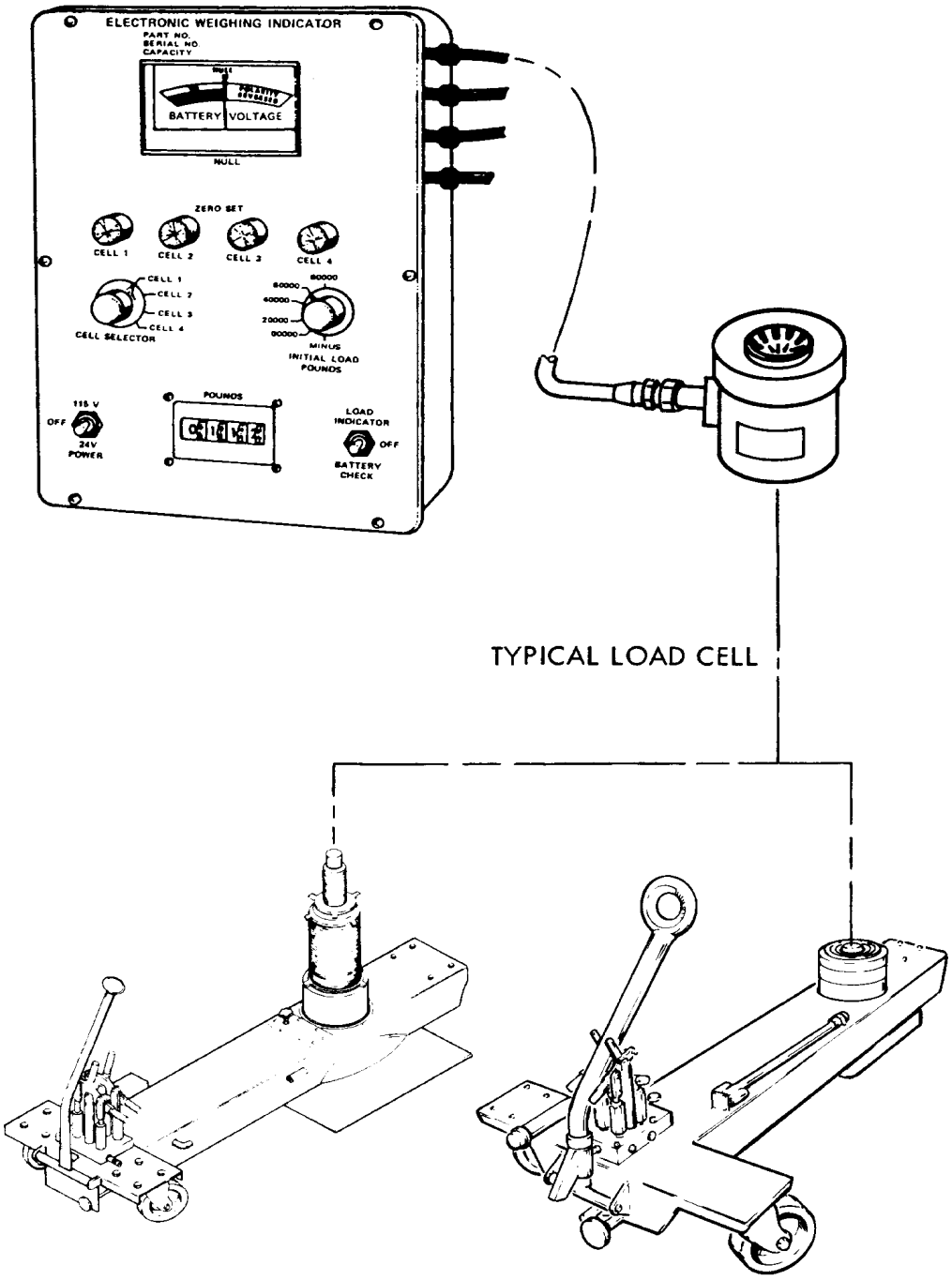

Electronic Weighing Indicator and Jacks

NOTES

AIRCRAFT TOWING

General

This section contains general towing information for C-141B aircraft. Towing precautions and bridle towing instructions are included. On smooth hard surfaces, not exceeding four percent grade, the airplane may be towed or backed by means of a towbar connected to the nose gear. If it becomes necessary to tow an airplane on a rough or soft surface or on a grade greater than four percent, tow using a steel cable (3/4 inch diameter or larger) attached to either the fore or aft eyes on the main landing gear (MLG). Towing by the nose gear under these conditions may cause structural damage.

WARNING: The airplane should be towed only when absolutely necessary to avoid unnecessary loads on the MLG trucks. Observe all safety precautions including those in AFOSH 127 series T.O.s.

CAUTION: When towing the airplane, pull in a straight line for a short distance (at least one revolution of the MLG wheels) before turning the nose wheels. This will reduce side loads imposed on the landing gear.

CAUTION: If lower torque arm is not properly secured, structural interference can result, as it will strike the nose gear baffle.

Towing Precautions

The following precautions must be observed:

a. Never tow the airplane with engines running.

b. Never tow the airplane without someone in the flight station to operate the brakes. If theauxiliary power unit (APU) is not running, position someone at the hand pump for the No. 3 hydraulic system. Select emergency brakes and use No. 3 hydraulic system for brakes during towing. Make sure brakes are in good operating condition and accumulators are fully charged. Do not pump brakes as this depletes brake accumulator pressure.

c. Never turn the nose gear while the airplane is not moving. When using the tow bar, wait until the airplane has started moving before turning the nose gear.

d. Never tow the airplane faster than a slow walk. Avoid quick starts and stops.

e. Never tow the airplane near obstacles without having someone walking at each wing tip and at the tail to guard against collision. Make sure an adequate system for relaying signals is understood by everyone involved in the operation. Use signal lights at night.

f. Never allow anyone to ride on the outside of the airplane. A person may scan the area from the emergency exit in the flight compartment.

g. Never allow anyone to enter or leave the airplane while it is moving.

h. Never tow the airplane in a congested area. Move all equipment out of the path of the airplane.

i. Never allow anyone to stand in or near the path of the airplane.

j. Never remove the chocks until ready to tow the airplane. Make sure the person in the flight station is ready to operate the brakes.

k. Do not tow the airplane with hydraulic system No. 2 - No. 3 interconnect valve open.

l. Never tow or back the airplane up hill using the nose gear towbar.

m. Never tow the airplane while the shock struts are inflated above the normal servicing pressure.

n. Never tow the airplane when wind velocities are such that mooring is required.

o. Never tow the airplane when the shock struts are extended more than the normal extension for a properly serviced strut. Under no circumstances will the aircraft be towed with the NLG strut “X” dimension exceeding 10.0 inches.

p. Make sure that cargo loading stabilizer struts are retracted before towing airplane.

q. Never tow the airplane with external nose ballast weights attached.

r. Instructions for towing the airplane with floor panels removed:

(1) The airplane can safely be towed either with the center floor panels removed and outboard treadways installed, or with outboard treadways removed and center panels installed. Do not tow airplane with center floor panels and outboard treadways removed.

(2) If after the floor panels are removed and a requirement to tow the airplane while more panels are removed than authorized, reinstalled the panels; however, two panels may be installed using a minimum of 50 percent of the fasteners evenly spaced around the panel. All other panels shall be reinstalled using 100 percent of the fasteners.

s. Never tow the airplane when the tires are underinflated.

t. Never tow the airplane if gross weight is more than 325,000 pounds.

NOTE: When using fabricated towing bridle, from MIL-W53420 wire rope 150 feet long (longer if required), loop ends through towing eyes on MLG and secure each end with three (min.) wire rope clips. Loop bridle over towing pintle of tractor to insure even load on both cables.

NOTE: Maintain constant voice communication with team members throughout the towing operation. Portable radios shall be used on “power-off” tows or the aircraft interphone system can be used during “power-on” tows.

Towing Instructions (Bridle Towing):

a. Connect the bridle to the main gear towing eyes and to the tractor.

b. Select the emergency brake system (No. 3 hydraulic system). At night, start the APU and turn on the navigation and anticollision lights.

c. If the APU is not running, make sure the No. 3 system emergency brake accumulators are charged to 3,000 psi, and station someone at the No. 3 hydraulic system hand pump.

d. Disconnect the ground wires.

e. Remove the wheel chocks and make sure the landing gear ground safety pins are installed in the landing gear.

f. Make sure the airplane brakes are released.

g. Tow the airplane to the desired area and stop the airplane with the nose wheels straight.

h. Apply brakes and place chocks in front of and aft of the main gear wheels.

i. Release brakes.

j. Ground the airplane.

k. Remove the bridle from the main gear.

l. Secure the flight station.

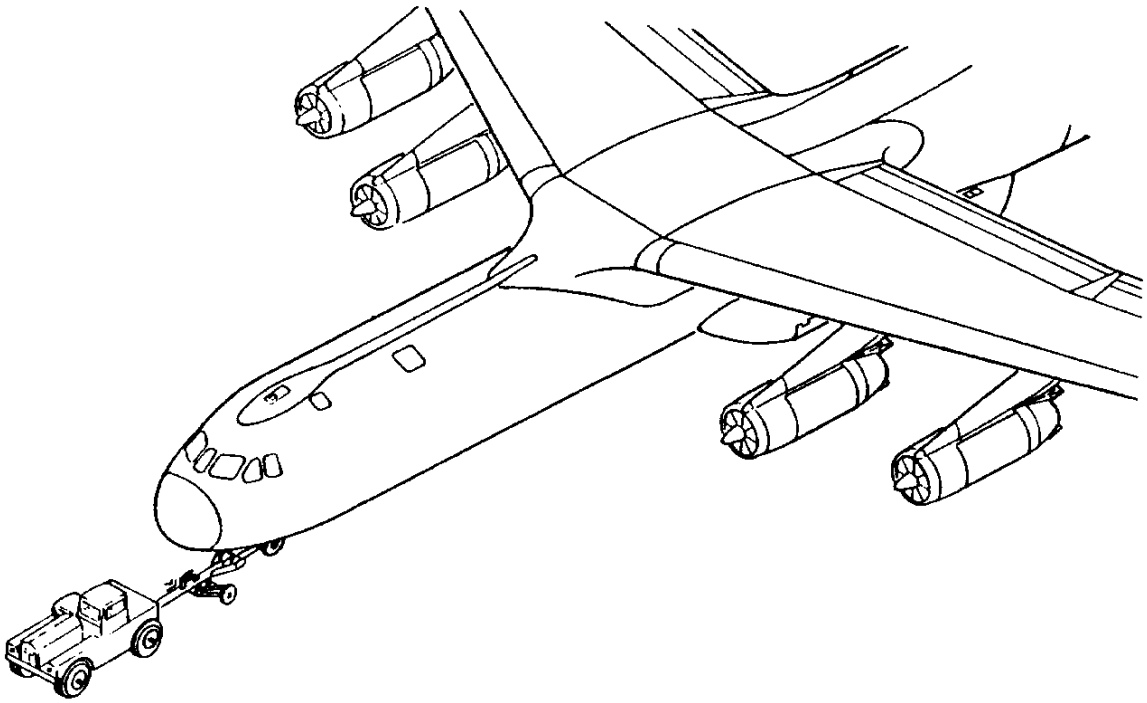

Aircraft Towing

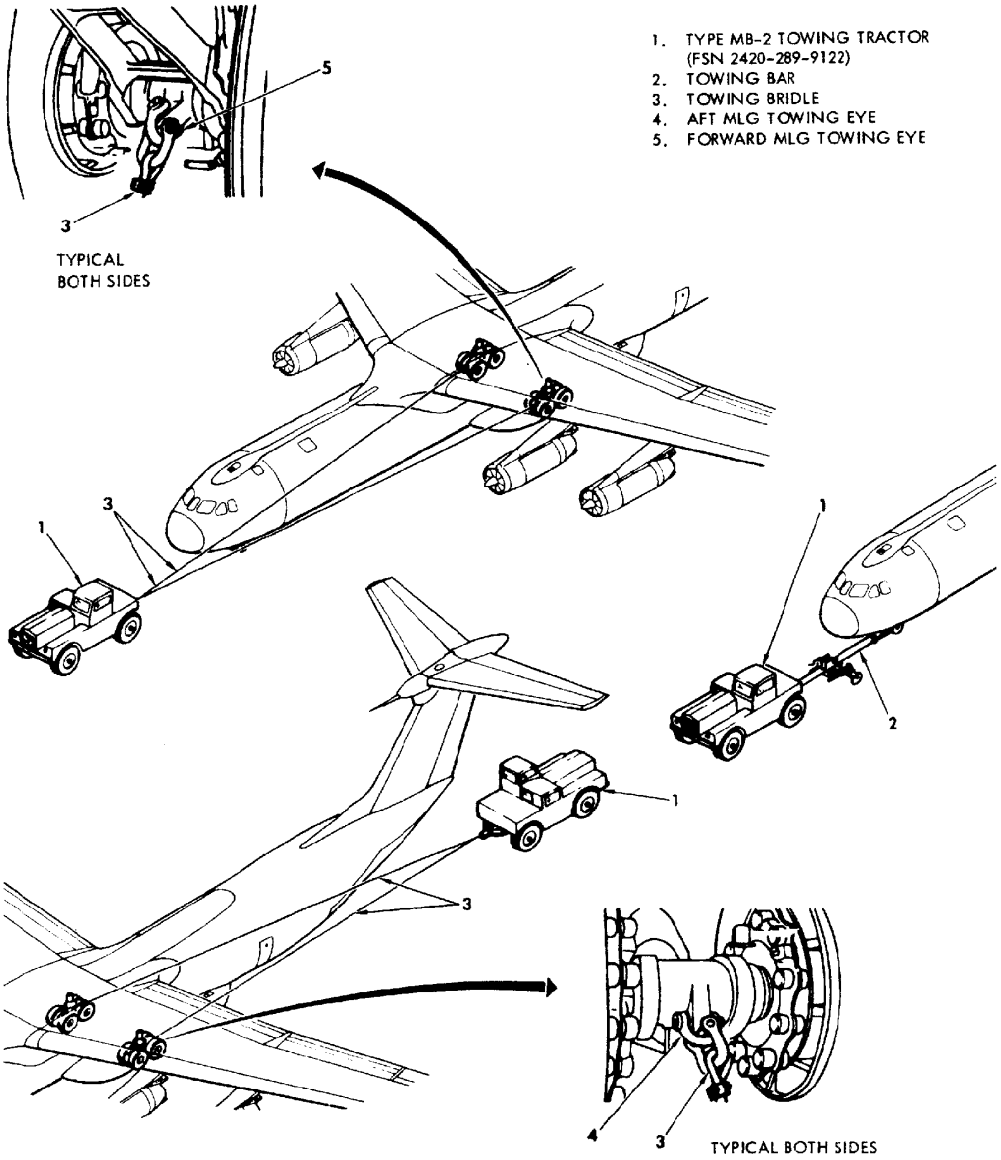

Aircraft Towing

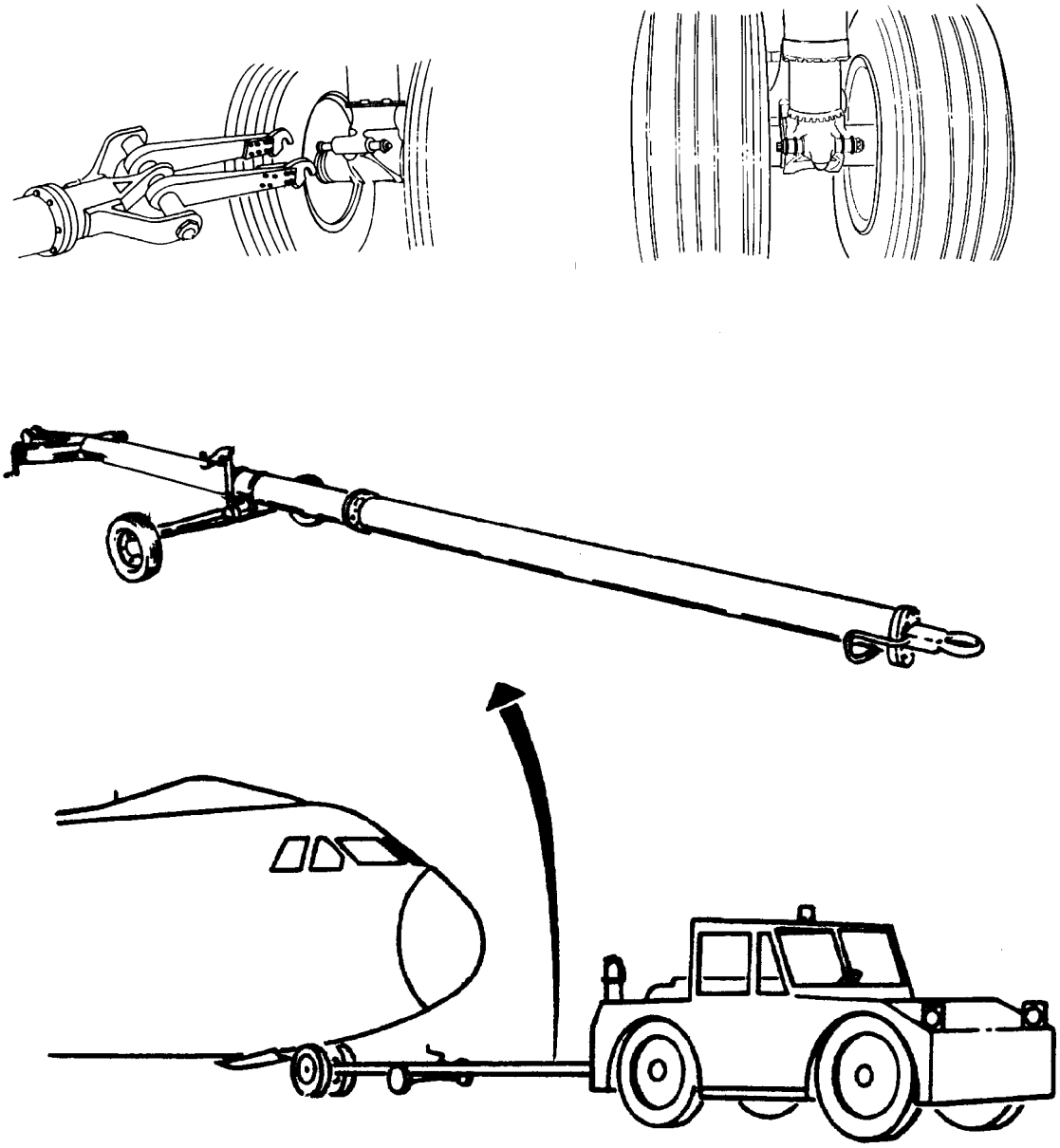

Nose Landing Gear (NLG) Towbar Connection

NOSE GEAR TURN IN DEGREES	WING TIP RADIUS	NOSE WHEEL RADIUS
30	196 FT. 2 IN.	132 FT. 6 IN.
35	176 FT. 2 IN.	115 FT. 6 IN.
40	160 FT. 7 IN.	103 FT.
45	148 FT.	94 FT.
50	137 FT. 5 IN.	86 FT. 6 IN.
55	128 FT. 4 IN.	81 FT.
60 MAX	120 FT. 4 IN.	76 FT. 6 IN.

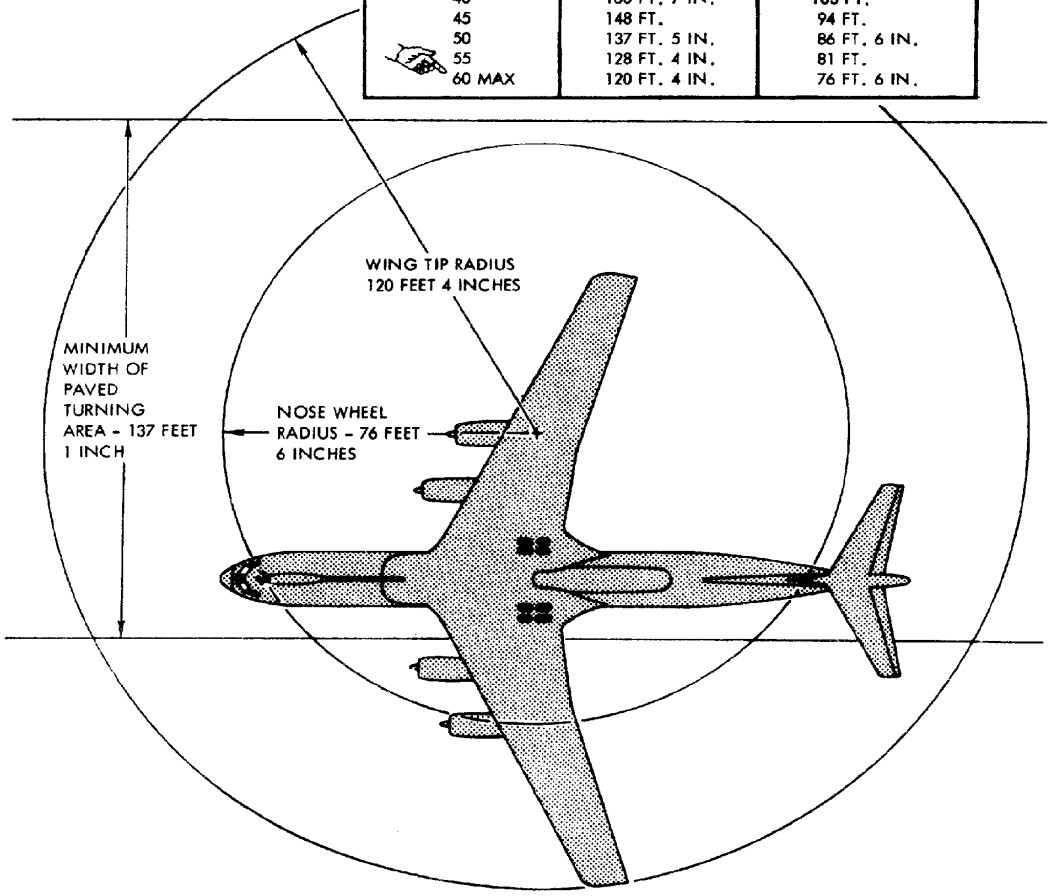

EXAMPLE:
NOSE GEAR IN 60 DEGREE TURN

C-141B AIRPLANE

Turning Radius for Towing

NOTES

PARKING AND MOORING

CAUTION: Do not leave the airplane parked in one spot indefinitely. Move the airplane at least each third day to prevent tires from developing flat spots and from freezing to the ramp. Refer to T.O. 4T-1-3.

Parking Instructions

a. Setting the brakes. The main gear brakes may be mechanically set for temporary parking. Never set the parking brakes when they are hot. To set the parking brakes, depress the rudder pedals and pull the parking brakes knob. When the brakes are set, the brake pedals will return approximately one inch. To release the parking brakes, depress the brake pedals, and the parking brake knob will return to the normal position. Do not use the parking brakes when parking for an extended time, use chocks instead.

b. Positioning the airplane. The heading of an airplane for parking is normally determined by convenience and the ease of maintenance. However, if there is a choice, head the airplane into the wind.

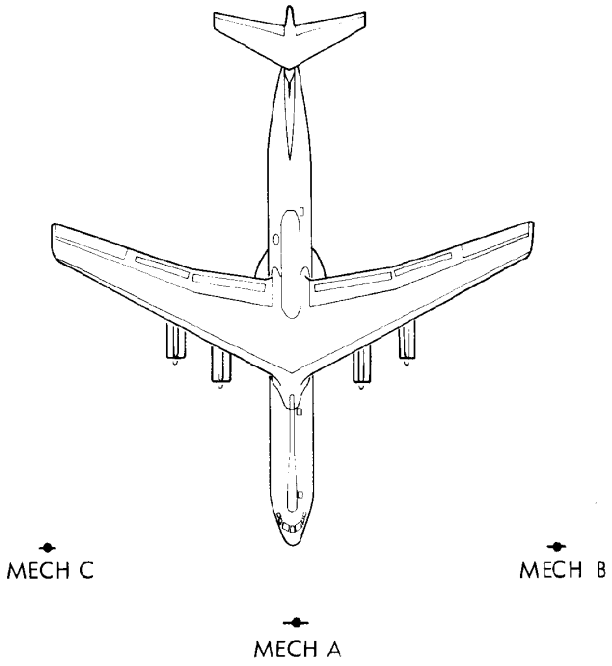

Aircraft Marshaller and Wing Tip Monitor Positions

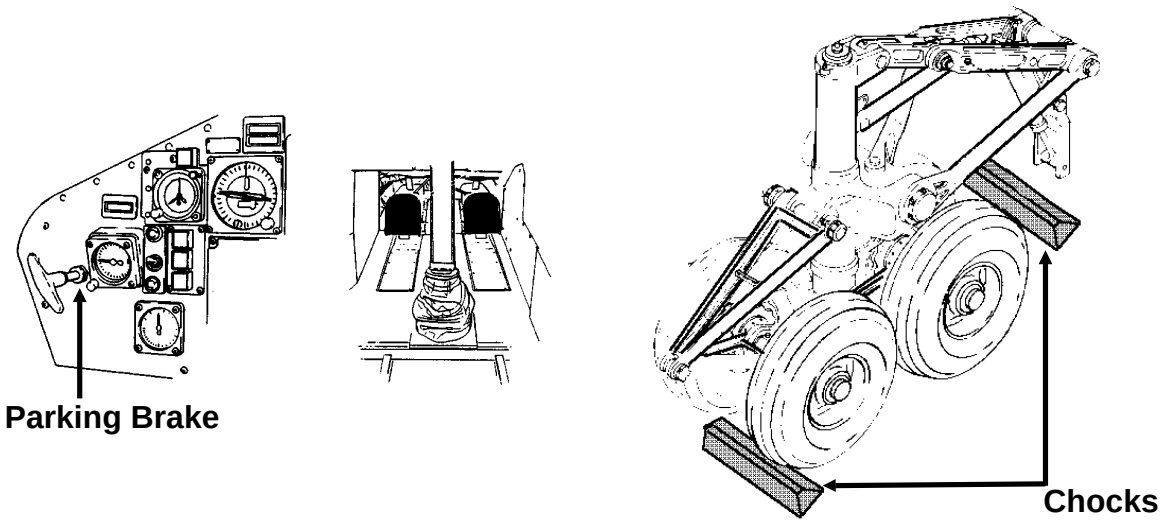

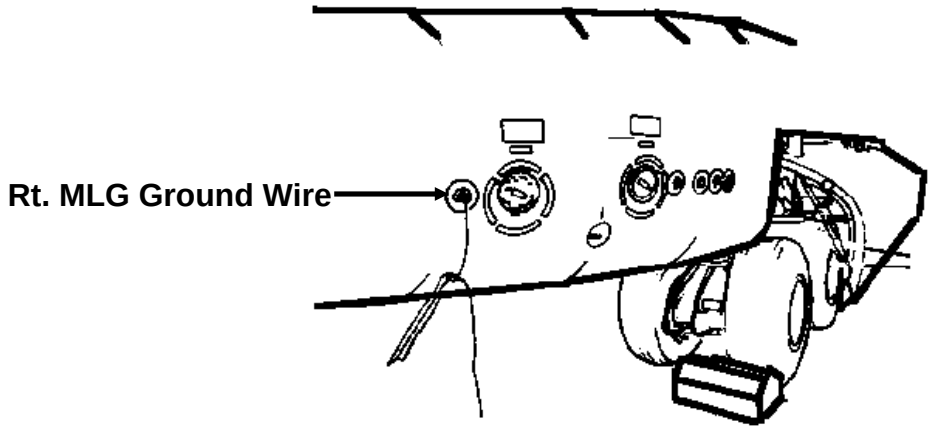

Parking Brake, Chocks, and Ground Wire

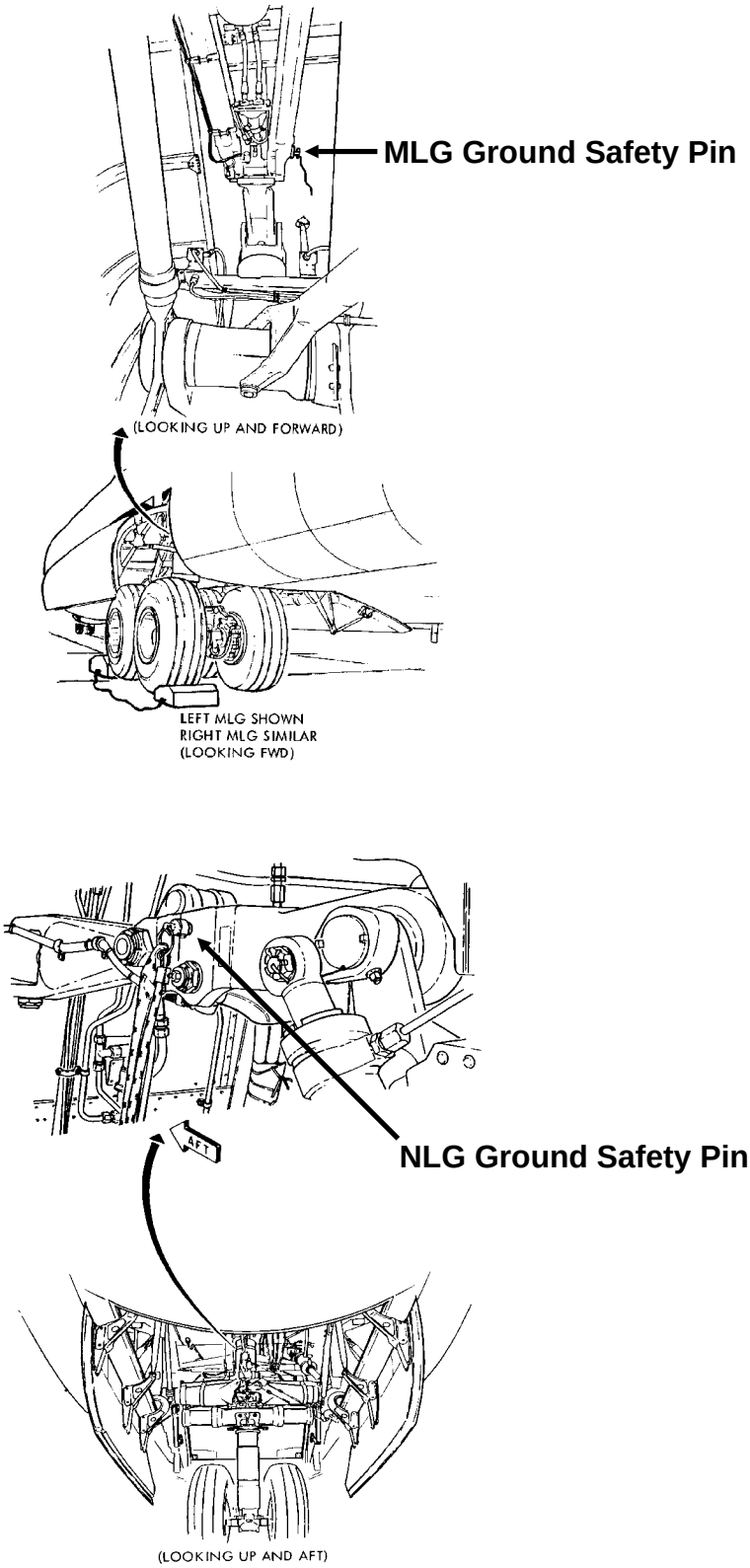

Main and Nose Landing Gear Ground Safety Pins

CAUTION: The control surface power units are not effective as gust locks at wind velocities in excess of 70 knots. If the aircraft has been subjected to wind velocities exceeding these limits, perform a visual check with an non-destructive inspection (NDI) conformation of suspected damage on all control surfaces and all attach points before flight.

Mooring Instructions

a. General mooring information. Four important factors must be taken into consideration when determining airplane mooring requirements: airplane gross weight, wind velocity, parking surface, and control surface design limits. The heavier the airplane and the more friction between the tires and the parking surface, the harder it is for the wind to move the airplane. In addition to the factors of gross weight, wind velocity, and parking surface, there is also a control surface design factor; that is, the wind velocity at which the control surfaces are subject to damage. The control surface power units for the rudder, elevator, and ailerons act as gust locks to damp surface motion; however, at gust in excess of 70 knots, these power units are not effective as gust locks.

b. Positioning of the primary controls for protection during ground gust conditions. The aileron, elevator, and rudder power unit control switches on the pilots' overhead panel should be in NORMAL position which actuates bypasses in the systems to make the power units act as gust locks or hydraulic dampers.

c. Airplane tiedown rings. Wing tiedown rings are provided in the lower surface of each wing at fuselage station (FS) 1020 and buttock line (BL) 400. The rings are spring-loaded and flush-mounted in the wing box structure, just forward of the rear beam. The nose tiedown ring is spring-loaded and is located on the forward side of the landing gear. The ring is an integral part of the nose wheel steering actuator. The aft fuselage tiedown fitting is the only fitting which must be removed from the stowed position in the cargo compartment and installed on the airplane. The fitting is a standard 25,000-pound quick-disconnect type cargo tiedown fitting. A receptacle is provided in the lower part of the aft fuselage at FS 1288 and BL 0.0 to provide a mounting place for the aft fuselage tiedown fitting.

d. Mooring the airplane during cold weather. When mooring the airplane in an extremely cold area, clear the parking area of snow and ice. Place insulating material (such as evergreen boughs or paper) on the ground, and roll the tires up on it. This helps keep the tires from freezing to the ground.

e. Mooring the airplane. Install tiedowns as necessary, depending on the type of ring grid pattern, type of surface, and type of weather. Wire rope of 10,000 pound breaking strength shall be used at all tiedown points. (Use of hemp, manila, or nylon rope is not permitted.)

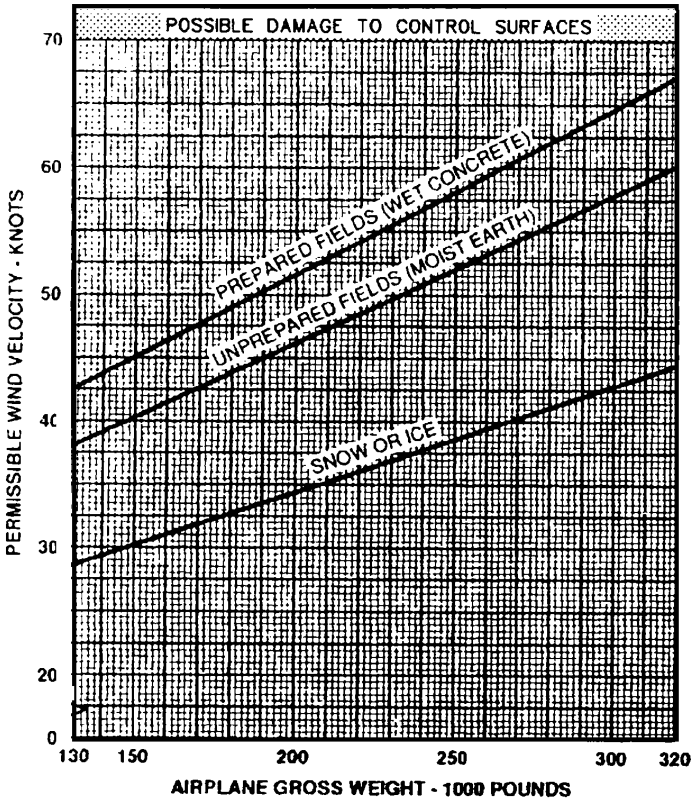

NOTE

1. TIEDOWN (MOORING) OF THE AIRPLANE IS REQUIRED IF ANTICIPATED WIND VELOCITIES ARE ABOVE THOSE INDICATED FOR AN AIRPLANE OF A PARTICULAR GROSS WEIGHT PARKED ON SURFACES OF THE TYPE INDICATED.
2. GRAPH IS BASED ON WORST POSSIBLE WEATHER CONDITIONS AND WORST POSSIBLE DIRECTION OF WIND RELATIVE TO AIRPLANE.
3. AIRPLANE WILL BE PARKED HEADED INTO THE WIND ANYTIME WINDS OR GUSTS ARE AT OR FORECASTED TO BE WITHIN TEN KNOTS OF CONDITIONS CALLING FOR MOORING.

Aircraft Mooring Versus Wind Velocities

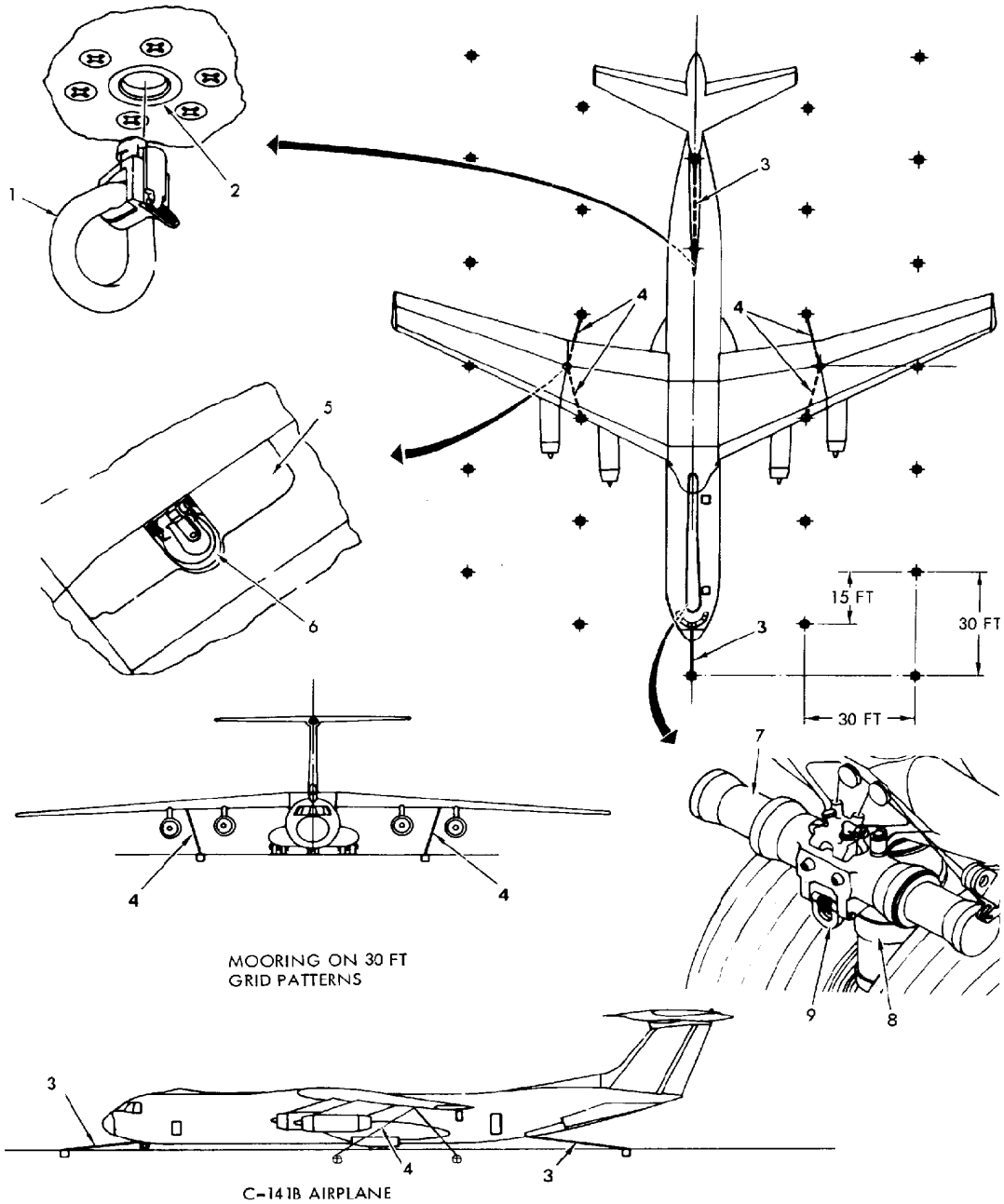

Aircraft Mooring (Sheet 1 of 4)

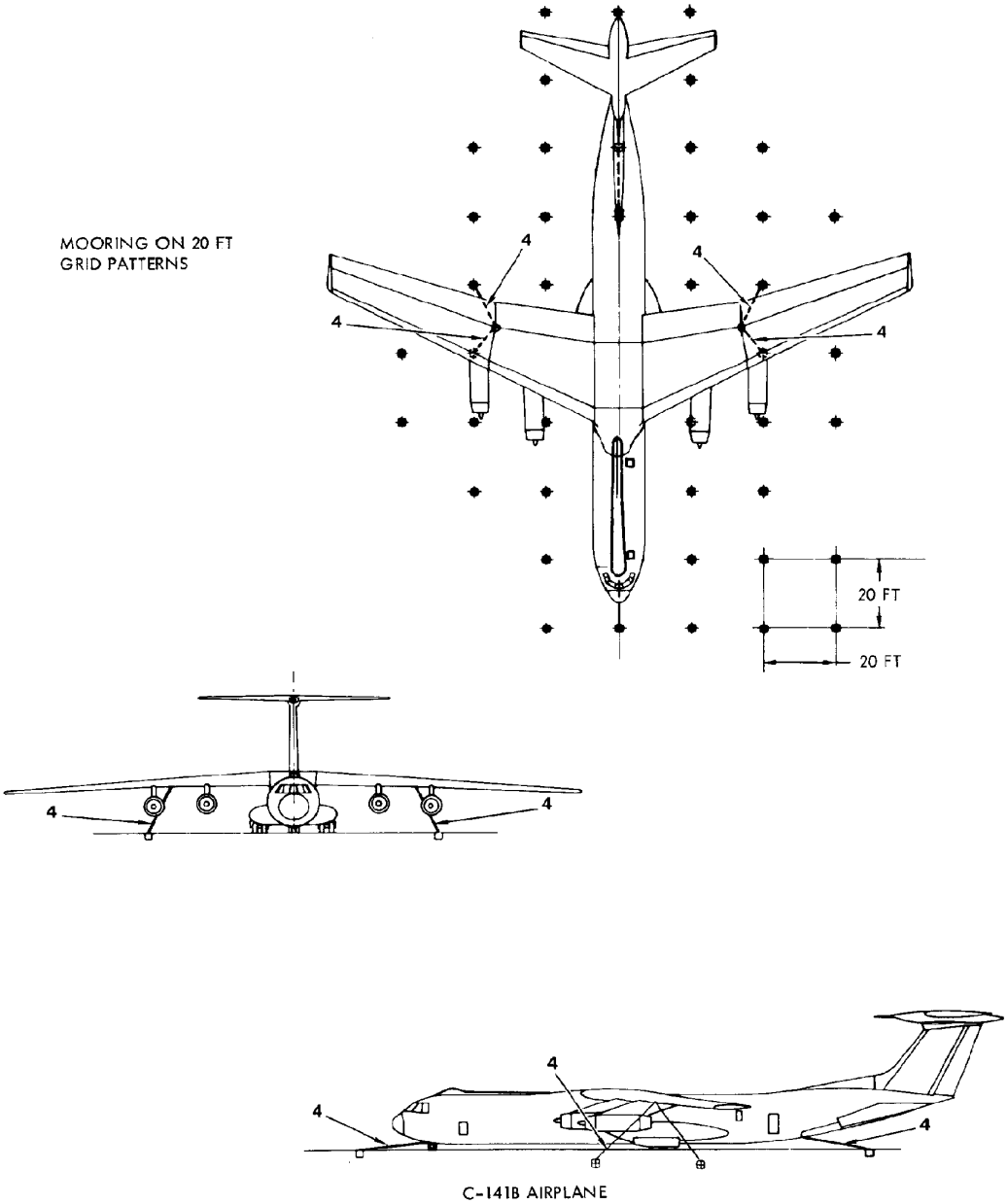

Aircraft Mooring (Sheet 2 of 4)

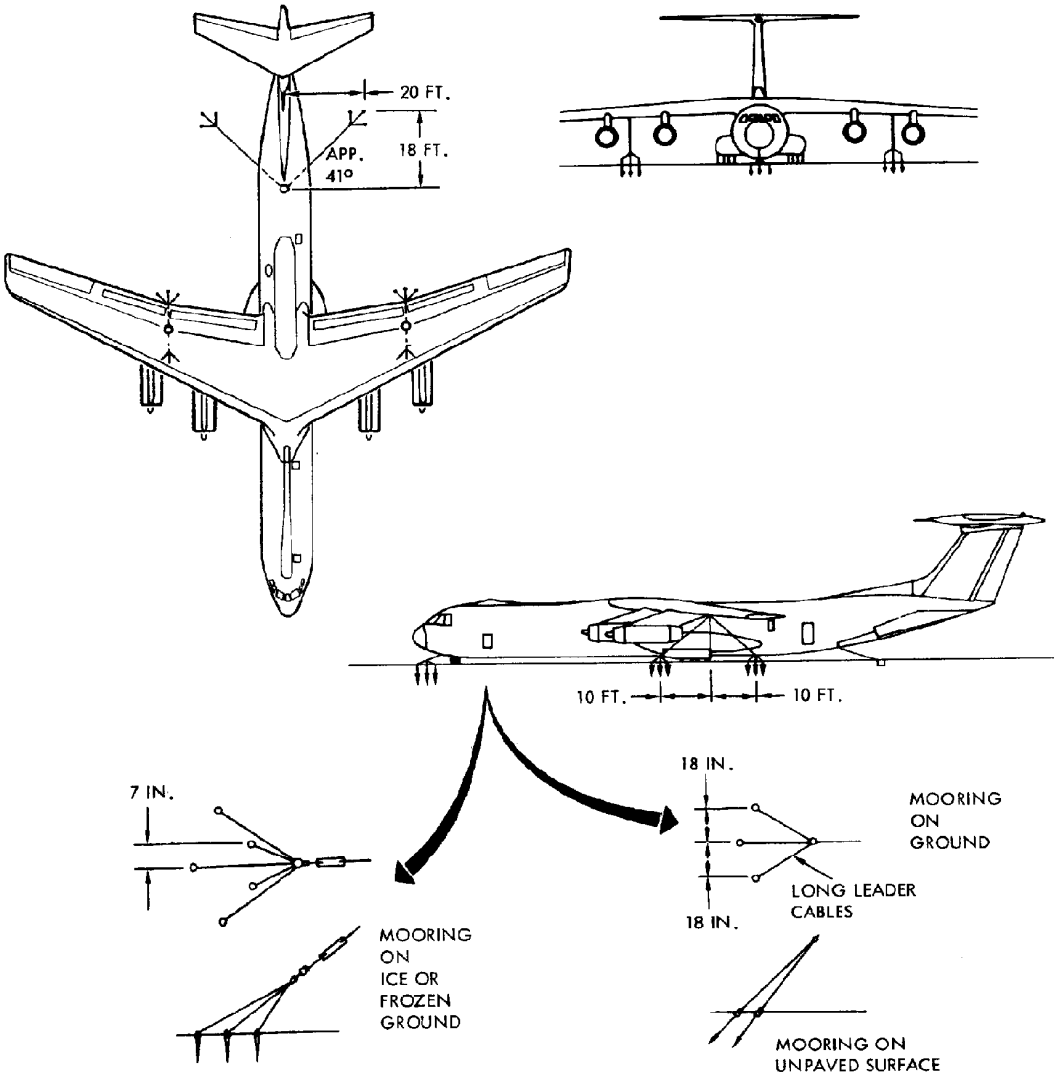

Aircraft Mooring (Sheet 3 of 4)

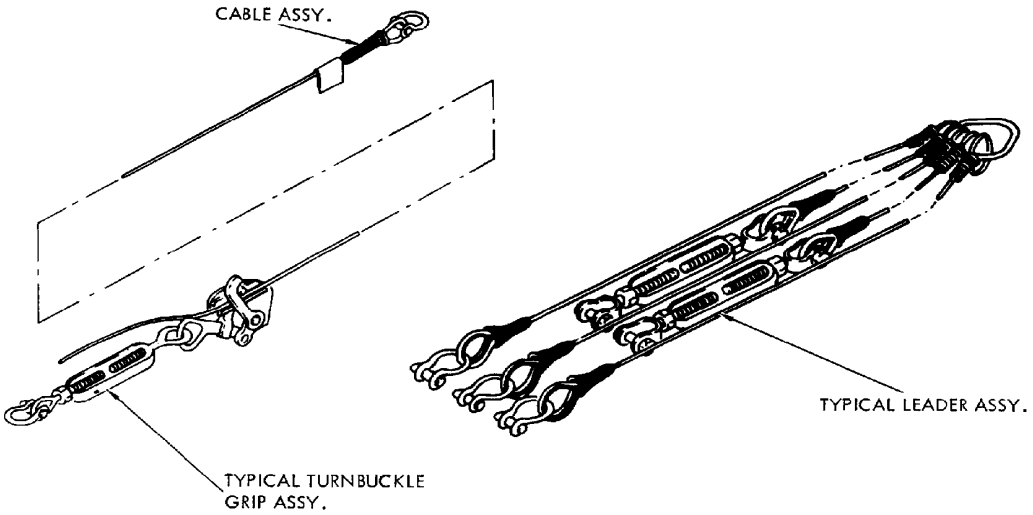

1. 25,000 LB CARGO TIE-DOWN FITTING (STOWED ON SIDE OF CARGO COMPARTMENT)
2. TIE-DOWN FITTING RECEPTACLE
3. 28-FT CABLE-TURNBUCKLE GRIP ASSY
4. 21-FT CABLE-TURNBUCKLE GRIP ASSY.
5. WING BOX STRUCTURE REAR SPAR
6. TIE-DOWN FITTING RECEPTACLE
7. NOSE WHEEL STEERING ACTUATOR
8. NOSE LANDING GEAR SHOCK STRUT
9. TIE-DOWN RING

NOTE

- ⊞ RAMP MOORING POINT
- O AIRPLANE MOORING POINT

Aircraft Mooring (Sheet 4 of 4)

NOTES

SERVICING

General Servicing Precautions

Hazards to the airplane and maintenance personnel can arise during servicing. Personnel shall be familiar with the safety precautions in T.O. 00-25-172 and AFOSH standard 127-100.

a. Airplane electrical systems will not be operated during servicing with the exception of cabin and flight deck lighting.

b. Servicing is difficult in extreme weather. Low temperatures cause metals to contract and rubber to harden. Fluid line joints will develop leaks and require torque readjustment. Extremely hot weather causes air pressure to rise in tires and accumulators. Fluids, especially fuel, will evaporate more rapidly; therefore, the danger of explosion is greater.

c. Exercise caution during servicing operations to keep foreign materials from entering airplane systems. High winds or dry weather increases the proportion of dust and other foreign matter in the air. If it is necessary to fuel the airplane through the wing filler ports during rainy weather, use a protective canopy to shelter the immediate area around the filler port.

d. After filling the tanks, clean up any spillage. This is especially necessary if fuel or oil is spilled on tires or other rubber material. If any fuel is spilled during refueling, the operation should be suspended immediately and the fuel hose replaced on its reel. The fueling vehicle will not be started nor will any automotive equipment be allowed within 50 feet of the airplane until the spilled fuel has been cleaned up and pronounced safe by the Fire Marshall or his/her representative.

e. When walking on top of the airplane, always use designated walkways.

Oxygen System Servicing Safety Precautions

Oxygen servicing may be accomplished while the airplane is in a power-on condition concurrent with cargo loading, unloading, or maintenance involved in established airlift operations; and while passengers/patients remain aboard AMC flights. Oxygen will NOT be serviced concurrent with refueling/defueling or operation of radar or other transmitting equipment.

a. Connect the airplane to an approved grounding post before working on the oxygen system.

b. Ground oxygen servicing trailer to same ground as airplane prior to connecting servicing hose.

c. Before connecting an external liquid or gaseous oxygen system, disconnect external electrical power from the airplane. Place the battery switch to OFF position.

d. Use only liquid oxygen (LOX), MIL-0-27210 Type II, for filling the systems. Moisture from impure oxygen may freeze valves in the lines and may render the oxygen system inoperative or deplete oxygen supply.

e. Make sure body, clothing, and protective equipment are clean and free of petroleum products (hair oil is a petroleum product) before performing maintenance on oxygen systems.

f. When handling LOX, wear a face shield, rubber wrap-around apron, cuffless trousers, long sleeve shirt or jacket buttoned, head covering, leather gloves, welders gauntlet, with liner, and shoes which fit closely around the top with rubber soles and heels.

g. Keep all petroleum products (such as oil, grease, and fuel) away from oxygen equipment.

h. Keep oxygen away from all sources of heat and sparks.

i. Air out clothing after working on the oxygen system to expel any accumulation of oxygen that could start rapid combustion.

j. Do not allow oxygen to mix with combustible gases (such as fuel fumes).

k. Do not handle LOX tubes or fittings with bare hands.

l. Make sure all personnel remain clear of overboard vent. Liquid will spew from the vent when the converter is full.

m. Make sure the airplane fill-buildup-vent valve and supply cart filler hose and adapter are thoroughly dry to prevent the hose from freezing in place during filling operations.

n. Purge the service cart hose until LOX flows from the service cart hose female filler valve.

o. Keep the LOX supply cart filler hose below chest level to avoid spilling liquid oxygen on the upper portion of the body.

p. Stand to one side when removing servicing hose from the fill-buildup-vent valve to avoid spewing LOX. The valve may freeze in the open position while the system is being filled.

q. If LOX contacts the skin, wash the area thoroughly with clean water, and then report to the nearest first-aid station.

r. If LOX is spilled on clothing, brush off immediately, remove the clothing, and dry for approximately 30 minutes.

s. Do not remove spilled LOX with unprotected hand.

Power Plant and Auxiliary Power Unit (APU) Fire Extinguisher Systems Servicing

The power plant and APU fire extinguisher system agent containers can not be serviced on the airplane. They must he replaced with serviceable containers if the pointer on the gage falls below the safe range.

Halon 1211 Portable Fire Extinguisher Servicing

Six Halon 1211 fire extinguishers are installed on the airplane. One extinguisher is located under the inboard auxiliary crew seat in the flight compartment. In the cargo compartment two are located immediately forward on the left troop door and two approximately 4 1/2 feet aft of the crew entrance door. One is located approximately midway of the cargo compartment on the right side. The pressure gauge on the fire extinguisher should indicate within the allowable limits. If the pointer falls below the safe range as indicated by the green marking, remove the extinguisher and forward it to an authorized servicing shop.

Main and Nose Landing Gear Tire Servicing

To eliminate damage to eyes when checking pressure during inflation/deflation of tires, adequate eye protection must be utilized. Failure to comply may result in injury to personnel.

An entry will be required in the aircraft forms to reflect the Emergency War Planning (EWP) tire inflation status. At the termination of the EWP commitment the normal tire inflation schedule will resume.

a. General Tire Inflation Requirements

Service all airplane tires with nitrogen (dehydrated air as an alternate) using tire inflation kits meeting MIL-I-85352.

b. Emergency War Planning (EWP) Tire Inflation

For flights having ramp gross weights above 325,000 pounds, main landing gear (MLG) tire pressure shall be increased to 210 psi.

c. Inspection of Main and Nose Landing Gear Tires

Use only tires with the same tread design and manufacture on the same axle. On nose gear tires, use tires which not only have similar tread design but also have similar tread wear. If it is necessary to use tires with different tread designs, replace one of the tires as soon as possible to provide like treads. Use tires of the same manufacture to ensure that the tires will have the same contact area with the ground thereby carrying an equal share of the load. If it is necessary to use tires of different manufacture, measure the inflated tire diameters, and pair those tires with diameters that are most nearly equal. Nylon tires should stand inflated 24 hours prior to measurement due to the initial stretch of this type tire material.

d. Tire Cut and Damage Evaluation

T.O. 4T-1-3 contains specific guidance and should be referred to for damage specifications.

Fuel System Servicing and Safety Precautions

a. Refueling, Defueling, and Ground Transfer of Fuel.

Refueling and defueling are normally accomplished through use of the single-point system; however, in some instances, it may be necessary to refuel and defuel over the wing. It is possible to defuel through the jettison masts. Ground transfer of fuel from tank to tank is accomplished by the fuel boost pumps.

b. Fuel Tank Capacities.

The fuel tank capacities are given in U.S. gallons, imperial gallons, liters, and pounds.

c. Fuel Grade Properties and Limits.

Refer to the applicable T.O. for the types of fuel used in the airplane.

d. Fuel Tank Quantity Dipstick.

A 3P11114 dipstick is stowed on each airplane in a holder to the left of the flight station entrance. This dipstick is a piece of wood approximately 55 inches long, with markings from 1 to 45 spaced 1 inch apart. To use the dipstick, fuel boost pumps are turned on and tank readings are taken in inches. Consult the applicable T.O. to convert the inch readings to gallons in each tank.

e. Use of Fuel Quantity Dipstick.

(1) Level the airplane.

(2) Connect external electrical power to the airplane.

(3) Turn on all fuel boost pumps for the tank or tanks in which fuel quantity is to be measured. Extended range tank boost pumps must be operated at least 20 minutes before taking a dipstick measurement: all other boost pumps must be operated at least five minutes before taking a dipstick measurement. Operation of the boost pumps is necessary to level the fuel in the tanks and the surge boxes.

(4) Remove filler cap and insert dipstick through filler opening. After taking reading, replace filler cap.

(5) Use applicable T.O. to convert the inch measurements of the dipstick to gallons.

(6) Use applicable T.O. to convert gallons to pounds when fuel density is known.

Exercise the greatest of caution when performing operations involving fuel. Fuel vapors can be ignited by static electricity or friction sparks, hot exhaust pipes, lighted smoking material and electrical devices.

The normal activity of personnel involved in fueling/defueling operations can generate static electricity. In order to avoid the possibility of fire or explosion resulting from sparks, each person will dissipate body static potential by gripping grounding hardware with the bare hand. This process will be repeated frequently during the entire fueling/defueling operation.

The following shall be observed during preparation for, and while proceeding with, fueling operations:

a. Airplane shall be located in an approved area.

b. Electrical power units used during fueling operations shall be no less than 50 feet from both the airplane fuel connections and vents, and from the fuel source or receiver fuel connections and vents.

c. There shall be no smoking or open flame within 50 feet of the fueling operations.

d. Tape shall not be used to seal tank openings, containers, or lines. Removal of tape is a source of static electricity.

e. External electrical power and batteries shall be disconnected from the airplane bus system unless required. When working on a fuel system component, all applicable circuit breakers shall be disengaged and electrical wires to the component shall be disconnected.

f. All components shall be grounded prior to insertion into the fuel tanks.

g. Maintenance stands equipped with static discharger plates shall be used and bonded to unpainted portions of the airplane. No spark producing clothing shall be worn while performing fuel system maintenance. Cotton clothing is preferable.

h. Electric lights and flashlights shall be explosion-proof type.

i. Airplane shall not be fueled during electrical storms, or while oxygen system is being serviced.

j. All work shall be suspended in the area when purging is in progress, and shall remain suspended until the area is declared safe.

k. Airplane shall not be refueled within 50 feet of hangars as measured from the airplane fuel connections and vents.

l. Maintenance equipment not being used shall be moved at least 50 feet away from the airplane fuel connections and vents.

m. During fueling operations and during maintenance of the fuel system two ground cables shall be connected from an approved earth ground to the airplane. Equipment used shall be grounded to approved earth grounds and to the airplane.

n. Under adverse conditions, refueling operations may be accomplished using bonding procedures (i.e., connecting a grounding cable between the airplane and refueling vehicle), when approved ramp static grounding points are not available on non-military (commercial) airfields, on host nation airfields, on snow and ice covered ramps or during bare/remote base operations.

o. In the event of major spillage of fuel, immediate action shall be taken to shut down or de-energize equipment in the area. All unnecessary personnel shall leave the area until the area is declared safe.

p. Residual fuel shall be drained into approved closed containers and moved to a safe location as soon as possible.

q. Fuel spilled on skin or clothing must be removed immediately. Fuels can cause skin irritation.

r. When carrying missiles, ammunition, or rockets, T.O. 11A-1-33 shall be complied with.

s. Applicable precautions in T.O. 00-25-172 shall be complied with.

u. Do not exceed 154,550 pounds total fuel load, as this is the maximum wing loading for flight. Since fuel quantity indicators show usable fuel only, 154,550 pounds of fuel actually shows as 153,352 pounds on the airplane indicators. (Approximately 1,198 pounds of fuel are nonusable.)

t. If a fuel boost pump circuit breaker disengages, do not reset it until the cause for disengagement has been determined.

u. During fueling operations, at least one 50-pound carbon dioxide fire extinguisher, or one of equal capability, will be located in the immediate vicinity of the airplane being serviced, and another at the ground power unit.

v. No person shall carry spark producing items such as cigarette lighters or matches into fueling areas.

w. No airborne radar or transmitting equipment shall be operated within 100 feet of a fueling area. No ground radar or transmitting equipment shall be operated within 300 feet of a fueling area. If necessary, transmitting equipment may be placed in standby by removing plate voltage. De-energize (open) RADAR ALTM (radar altimeter) circuit breaker on navigator’s overhead circuit breaker panel.

x. All air used in fuel tanks shall be filtered and completely free of oil, water, solvents, vapors, dirt, and other foreign substances.

y. Maintain balance between opposite wings within 8,000 pounds during fueling operations. For example, the No.1 main fuel tank can be empty, and the No. 4 main fuel tank can have up to 8,000 pounds of fuel in it (assuming all other symmetrical tanks are balanced from wing to wing). The fuel quantity system is adequate for determining this balance provided the lateral slope of the ground does not exceed three degrees. This 8,000-pound limit is a servicing limit only; for taxi or flight limits, refer to T.O. lC-141B-1.

z. When refueling, fill the main tanks and add fuel as needed to the auxiliary tanks. When additional fuel is needed, place fuel in the extended range tanks. During single point refueling, and when the REFUEL switches are being used to stop fuel flow into the fuel tanks, carefully monitor the fuel quantity gages for symmetrically opposite tanks. If the fuel quantity gage for one tank rises at a rate considerably different from the gage for the symmetrically opposite tank, the fuel quantity indicating system could be in error. If erroneous readings are suspected, check the actual fuel quantities by using the fuel quantity dipstick. Fuel booster pumps in a tank that has been drained dry shall not be operated until the fuel tank has been reserviced.

Draining Condensate From Fuel Tanks

Condensate drain valves in the lower surfaces of the wings permit water to be drained from the fuel tanks. Consult the applicable T.O. for the locations of the condensate drain valves and the drain tube assembly used to operate the valves and to catch the fuel and water. Also, observe all cautions and warning associated with the task.

Fuel tank sumps will be drained before and after each refueling. This is to remove water before servicing. When possible, allow 30 minutes or longer after completion of servicing before draining fuel tank sumps.

Crew Galley Servicing

The crew galley, located at the forward end of the cargo compartment near the crew door, contains food, beverages, and drinking water for the crew. The galley fresh-water tank, the hot-beverage unit, the paper-cup dispenser, the refuse container, the refrigerator, and the food and utensils storage drawer may require servicing prior to and after each flight, depending on the extent of the flight and the use of the galley, but should be cleaned after every flight. The hot-beverage unit, if installed, should be cleaned after each flight, and more often if necessary. Use clean hot water to clean the canister and hot beverage unit. The paper-cup dispenser should be serviced as necessary. The dispenser holds approximately 50 paper cups when filled. The refuse container should be emptied and cleaned after each flight, and more often if necessary. The refrigerator should be cleaned after each flight, and more often if necessary, and serviced with dry ice prior to each flight. If use of the refrigerator is anticipated, fill with 20 pounds of dry ice. Clean the food and utensil drawer and restock as necessary. Clean the exterior of the galley and galley equipment.

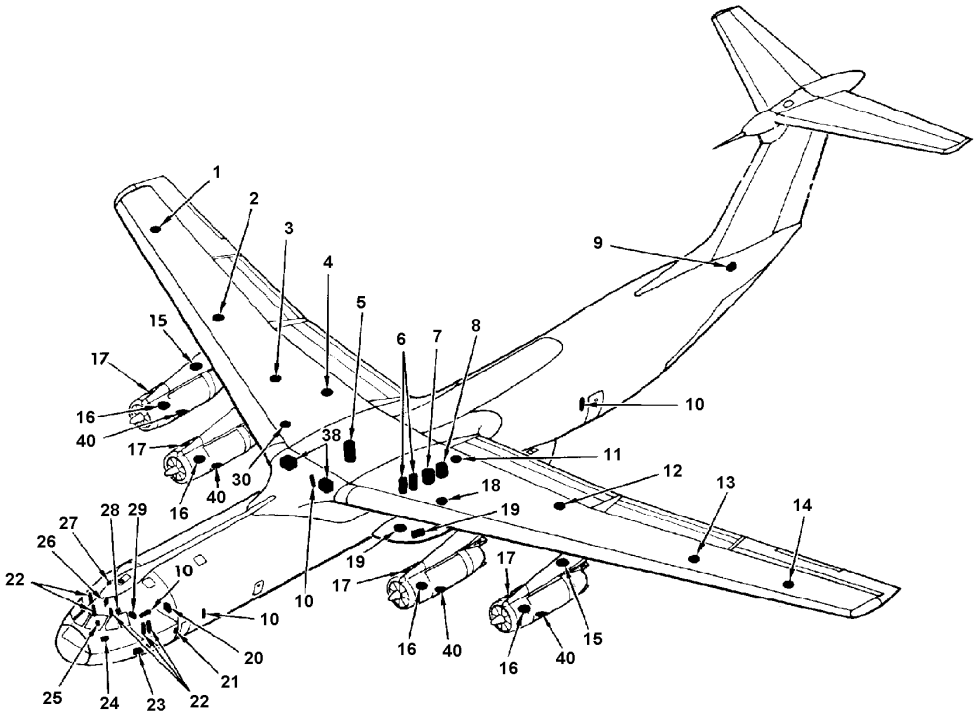

1. NO. 4 MAIN TANK FILLER CAP
2. NO. 4 AUXILIARY TANK FILLER CAP
3. RH EXTENDED RANGE TANK FILLER CAP
4. NO. 3 AUXILIARY TANK FILLER CAP
5. NO. 1 HYDRAULIC SYSTEM RESERVOIR
6. NO. 3 HYDRAULIC SYSTEM ACCUMULATORS
7. NO. 3 HYDRAULIC SYSTEM RESERVOIR
8. NO. 2 HYDRAULIC SYSTEM RESERVOIR
9. PETAL DOOR CENTRAL GEARBOX
10. A-20 PORTABLE FIRE EXTINGUISHERS
11. NO. 2 AUXILIARY TANK FILLER CAP
12. LH EXTENDED RANGE TANK FILLER CAP
13. NO. 1 AUXILIARY TANK FILLER CAP
14. NO. 1 MAIN TANK FILLER CAP
15. FIRE EXTINGUSHER SERVICING INSPECTION ACCESS
16. CSD OIL AND THRUST REVERSER FILLER ACCESS
17. ENGINE OIL FILLER ACCESS
18. NO. 2 MAIN TANK FILLER CAP
19. APU OIL FILLER ACCESS
20. GALLEY WATER TANK
21. GALLEY REFUSE CONTAINER
22. PORTABLE OXYGEN BOTTLE
23. NO. 4 HYDRAULIC SYSTEM RESERVOIR
24. CREW OXYGEN FILLER ACCESS
25. BATTERY AND SUMP JAR
26. FLIGHT ENGINEER'S FUEL MANAGEMENT PANEL
27. LAVATORY WASH WATER TANK
28. LAVATORY SERVICE CART CONNECTION
29. ELECTRICAL SPARES BOX
30. NO. 3 MAIN TANK FILLER CAP
31. MAIN LANDING GEAR TIRES
32. MAIN LANDING GEAR SHOCK STRUT
33. MAIN LANDING GEAR AXLE BEAM POSITIONER CYLINDER AND RESERVOIR
34. NOSE LANDING GEAR TIRES
35. NOSE LANDING GEAR SHOCK STRUT
36. CARGO COMPARTMENT OXYGEN FILLER ACCESS
37. SINGLE POINT REFUELING ADAPTER
38. AIR CONDITIONING REFRIGERATOR COOLING TURBINE
39. APU FIRE EXTINGUISHER SERVICING INSPECTION ACCESS DOOR
40. STARTER OIL FILLER ACCESS (TYPICAL EACH ENGINE)

Servicing Points (Sheet 1 of 2)

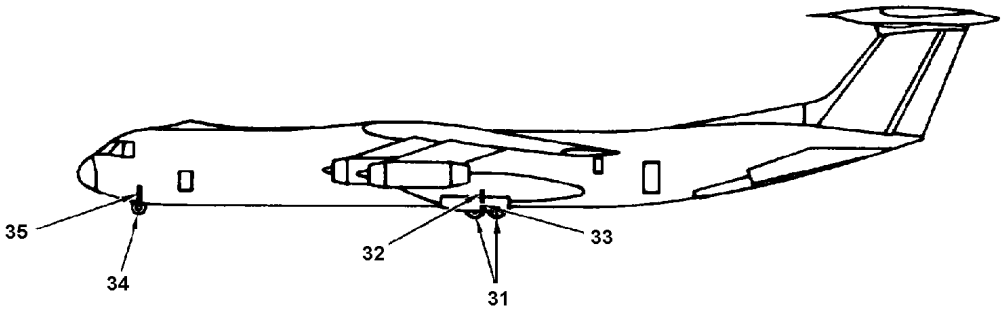

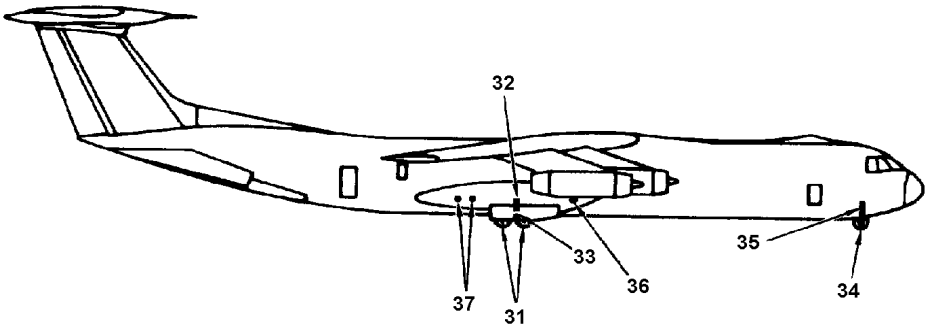

Servicing Points (Sheet 2 of 2)

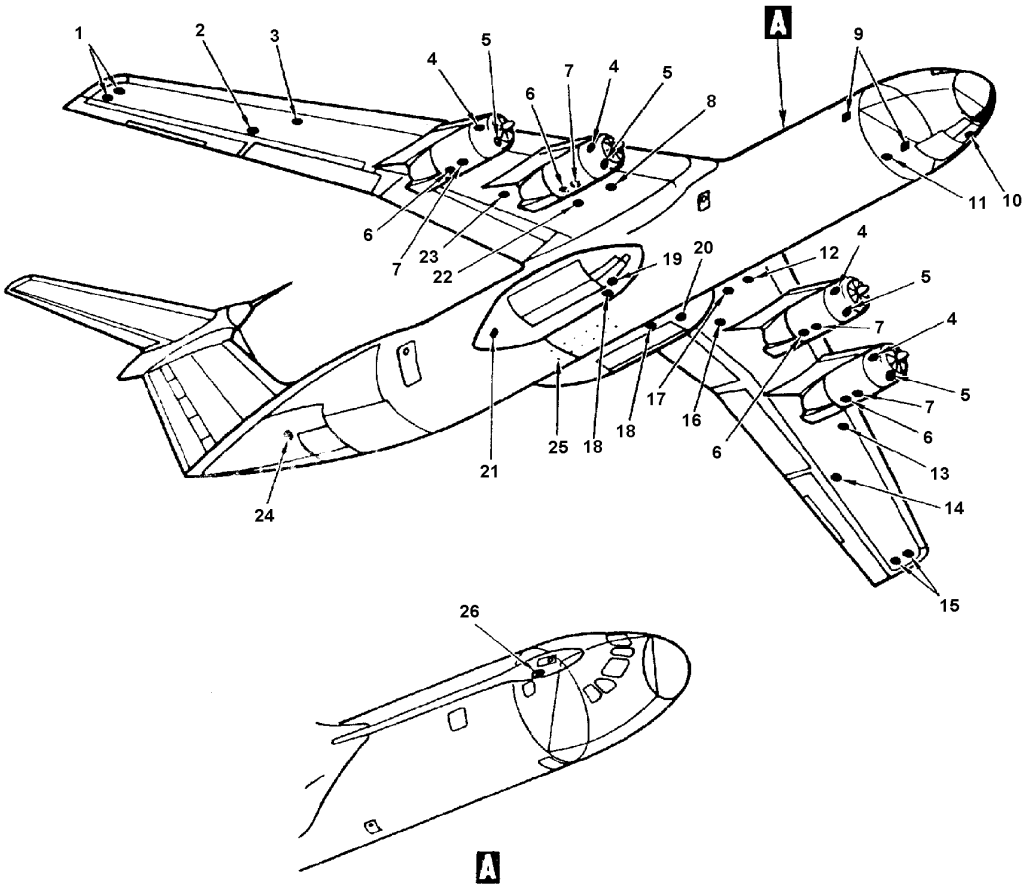

1. NO. 4 MAIN TANK CONDENSATE DRAIN VALVES
2. FUEL TNAK VENT FOR RIGHT WING FUEL TANKS
3. NO. 4 AUXILIARY TANK CONDENSATE DRAIN VALVE
4. ENGINE OIL TANK DRAIN
5. CSD OIL TANK DRAIN
6. ENGINE ACCESSORY DRIVE GEARBOX DRAIN
7. CSD DRAIN
8. NO. 3 MAIN TANK CONDENSATE DRAIN VALVE
9. PITOT-STATIC SYSTEM DRAIN BOX
10. CREW OXYGEN DRAIN
11. LAVATORY DRAIN
12. NO. 2 MAIN TANK CONDENSATE DRAIN VALVE
13. NO. 1 AUXILIARY TANK CONDENSATE DRAIN VALVE
14. FUEL TANK VENT FOR LEFT WING FUEL TANKS
15. NO. 1 MAIN TANK CONDENSATE DRAIN VALVE
16. LH EXTENDED RANGE TANK CONDENSATE DRAIN VALVE
17. NO. 2 AUXILIARY TANK CONDENSATE DRAIN VALVE
18. HYDRAULIC DRAIN
19. CARGO COMPARTMENT OXYGEN CONVERTER DRAIN
20. APU OIL TANK DRAIN
21. SINGLE POINT REFUELING DRAIN SHUTOFF VALVE
22. NO. 3 AUXILIARY TANK CONDENSATE DRAIN VALVE
23. RH EXTENDED RANGE TANK CONDENSATE DRAIN VALVE
24. PETAL DOOR MOTOR SEAL DRAIN
25. FUSELAGE DRAIN HOLES
26. AERIAL REFUELING RECEPTACLE DRAIN

Draining Provisions

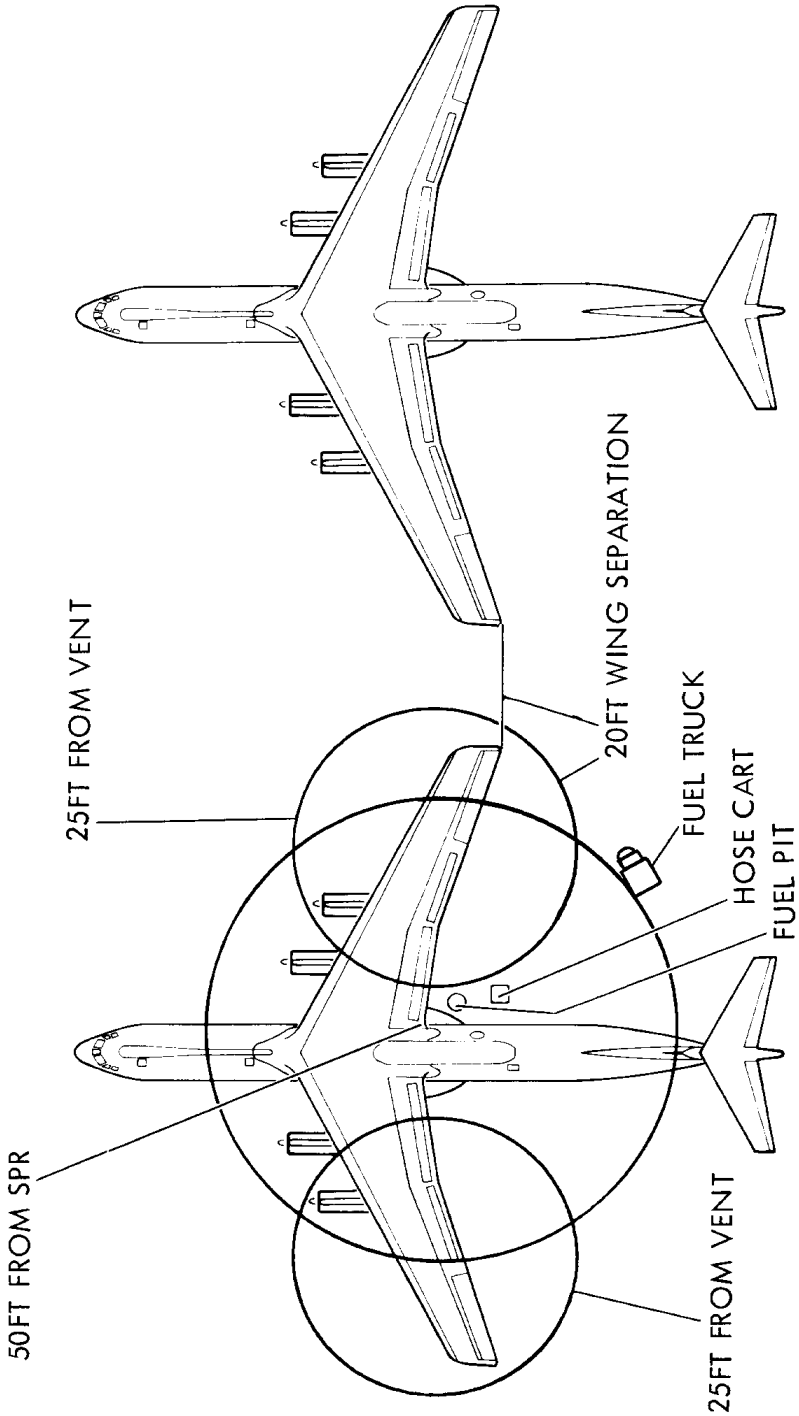

Fuel Servicing Safety Zone (FSSZ)

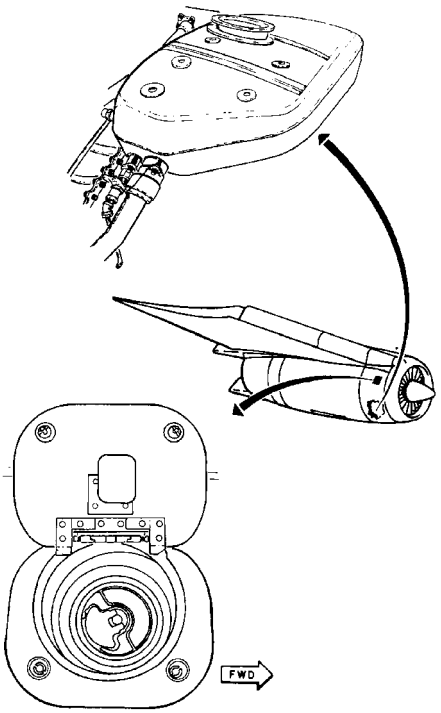

Engine Oil Servicing

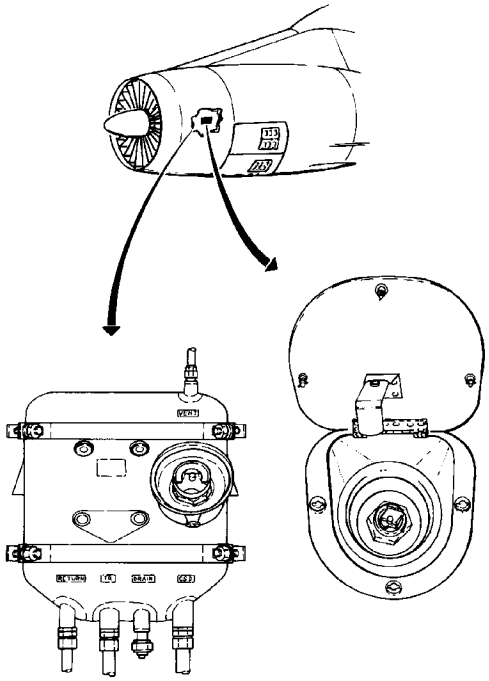

Constant Speed Drive (CSD) Oil Servicing

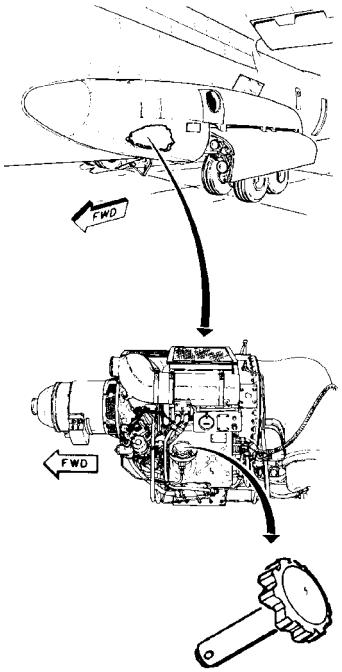

Auxiliary Power Unit (APU) Oil Servicing

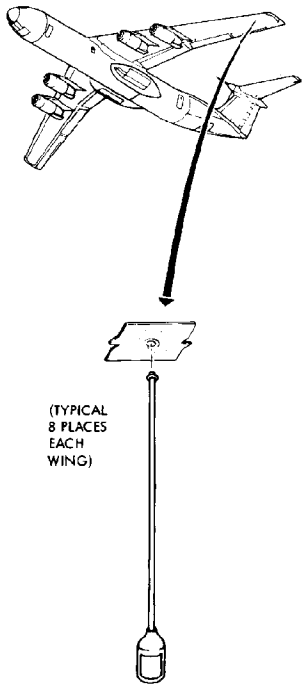

Condensate Fuel Tank Draining

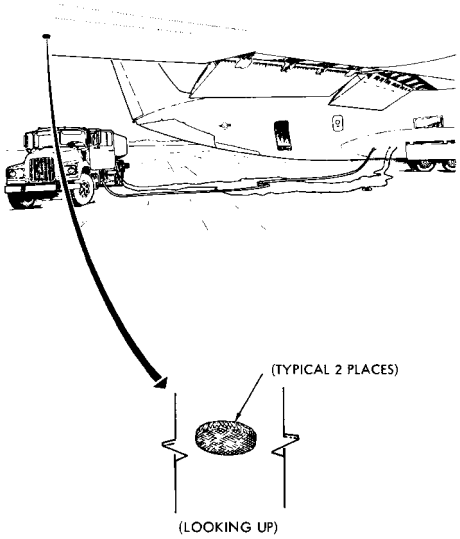

Fuel Vent

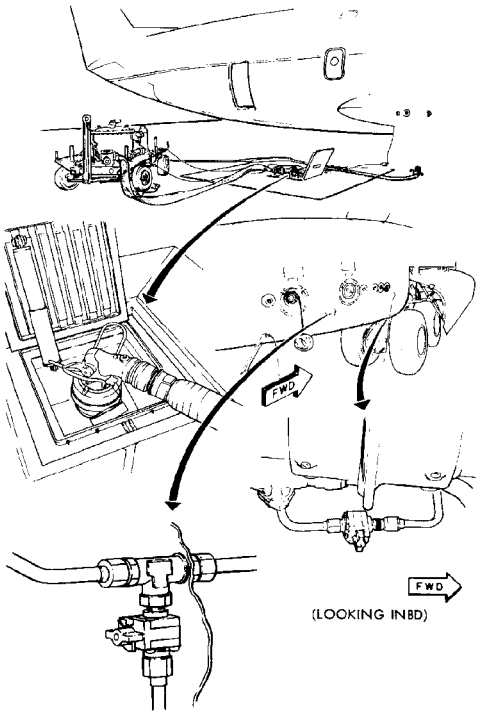

Drain Valves

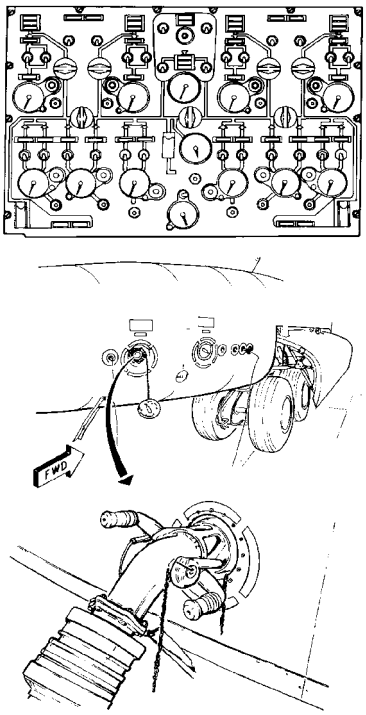

SPR Receptacle

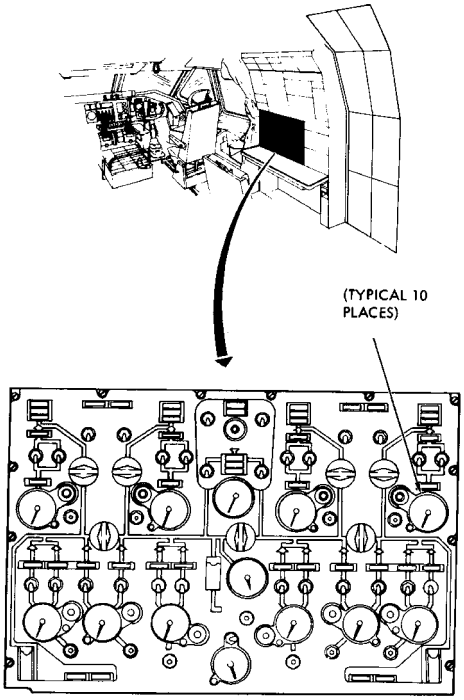

Fuel Servicing Panel

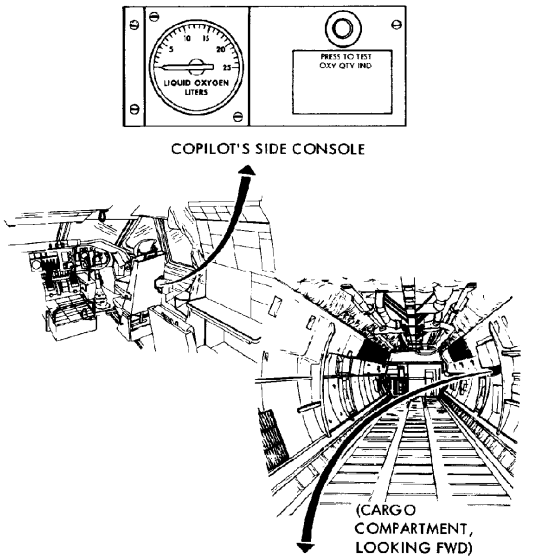

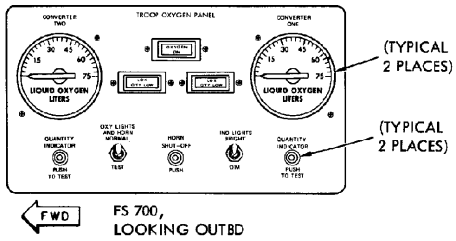

(TYPICAL 9 PLACES)

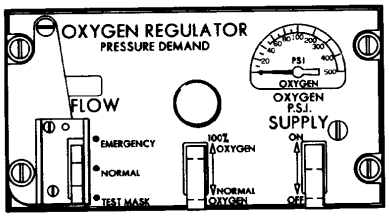

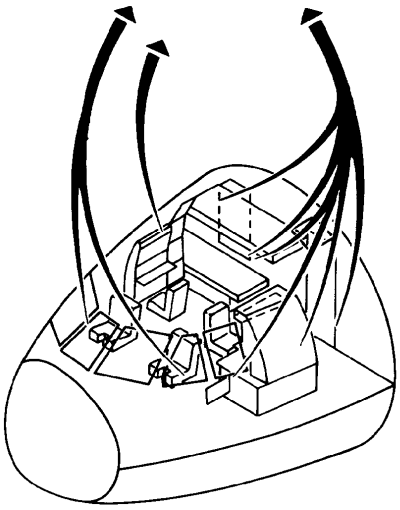

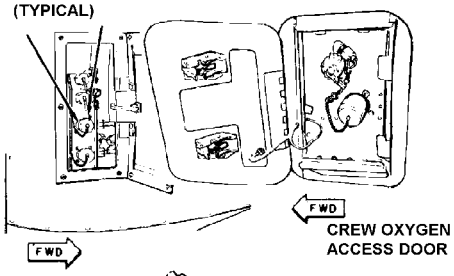

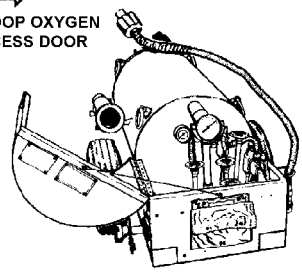

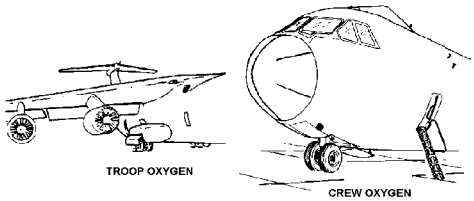

Oxygen Servicing

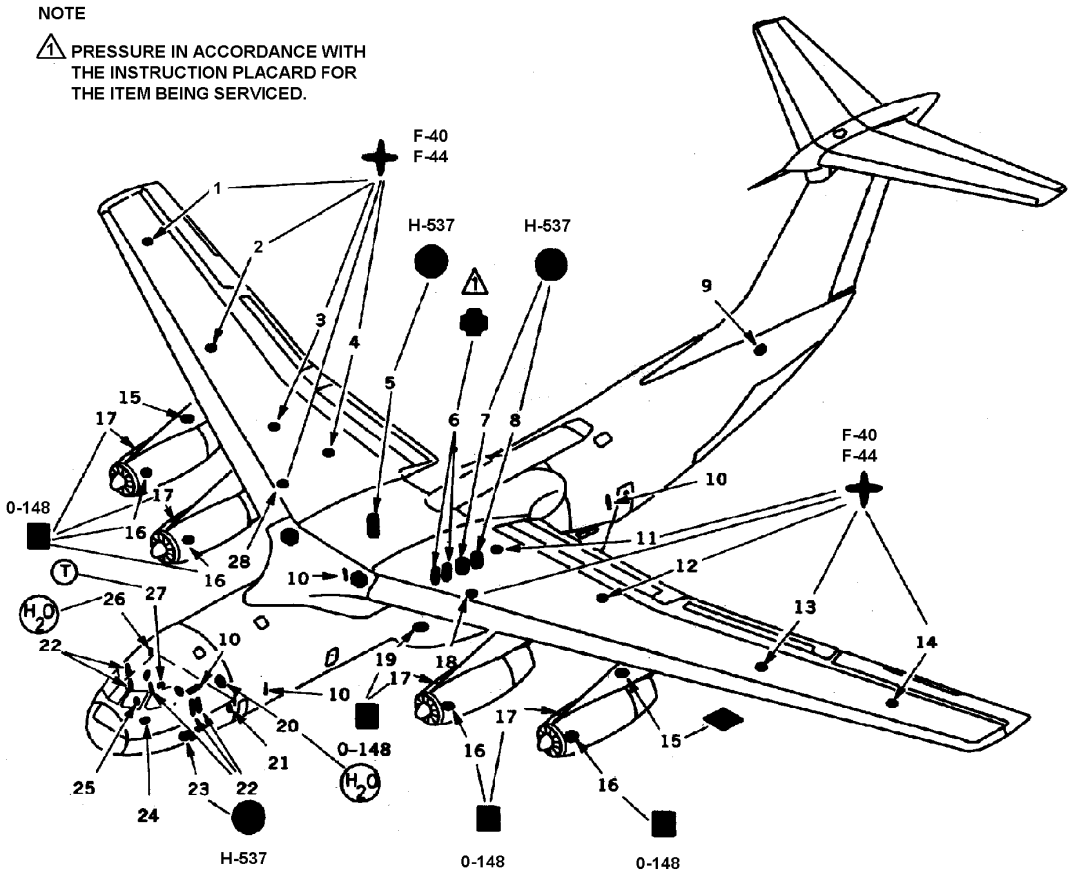

1. NO. 4 MAIN TANK FILLER CAP
2. NO. 4 AUXILIARY TANK FILLER CAP
3. RH EXTENDED RANGE TANK FILLER CAP
4. NO. 3 AUXILIARY TANK FILLER CAP
5. NO. 1 HYDRAULIC SYSTEM RESEVOIR
6. NO. 3 HYDRAULIC SYSTEM ACCUMULATORS
7. NO. 3 HYDRAULIC SYSTEM RESOVOIR
8. NO. 2 HYDRAULIC SYSTEM RESEVOIR
9. PEDAL DOOR CENTRAL GEARBOX
10. A-20 PORTABLE FIRE EXTINGUISHER
11. NO. 2 AUXILIARY TANK FILLER CAP
12. LH EXTENDED RANGE TANK FILLER CAP
13. NO. 1 AUXILIARY TANK FILLER CAP
14. NO. 1 MAIN TANK FILLER CAP
15. FIRE EXTINGUISHER SERVICING INSPECTION ACCESS
16. CSD OIL AND THRUST REVERSER FILLER ACCESS
17. ENGINE OIL FILLER ACCESS
18. NO. 2 MAIN TANK FILLER CAP
19. APU OIL FILLER ACCESS
20. GALLEY WATER TANK
21. GALLEY REFUGE CONTAINER
22. PORTABLE OXYGEN BOTTLE
23. NO. 4 HYDRAULIC SYSTEM RESEVOIR
24. CREW OXYGEN FILLER ACCESS
25. BATTERY AND SUMP JAR
26. LAVATORY WASH WATER TANK
27. LAVATORY SERVICE CART CONNECTION
28. NO. 3 MAIN TANK FILLER CAP

Servicing Points (Sheet 1 of 2)

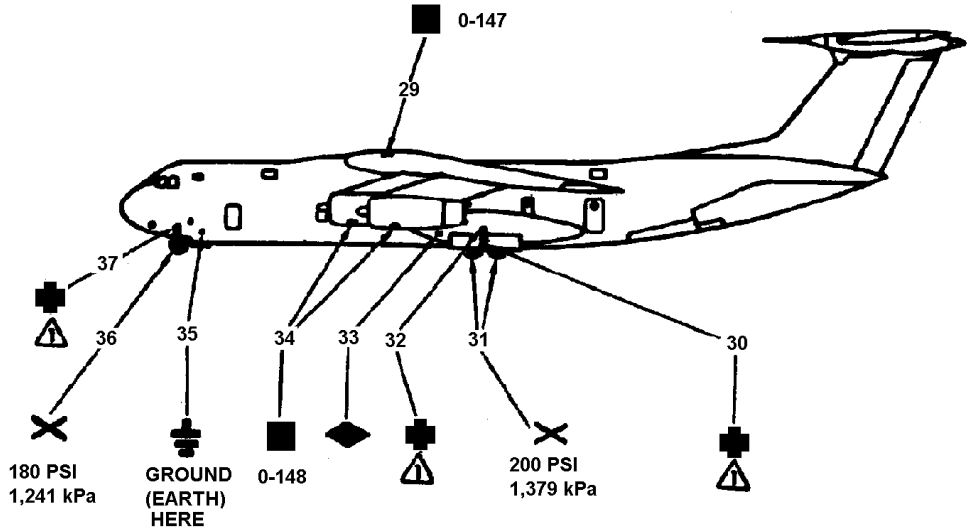

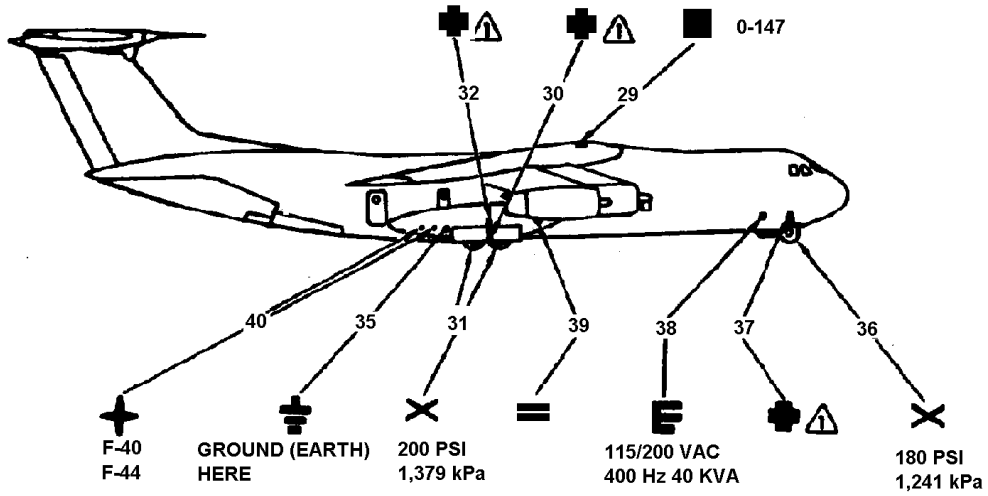

29. AIR CONDITIONING REFRIGERATOR COOLING TURBINE
30. MLG AXLE BEAM POSITIONER
31. MLG TIRES
32. MLG SHOCK STRUT
33. APU FIRE EXT SERVICING INSP ACCESS DOOR
34. STARTER OIL FILLER ACCESS
35. STATIC GROUNDING RECEPTACLE
36. NLG TIRES
37. NLG SHOCK STRUT
38. EXT ELECTRICAL POWER RECEPTACLE
39. CARGO COMPARTMENT OXY FILLER ACCESS
40. SINGLE POINT REFUELING ADAPTERS

Servicing Points (Sheet 2 of 2)

AIR CONDITIONING SYSTEM

General Description

The air conditioning system includes the following subsystems: equipment cooling, bleed air, pressurization, heating and cooling, and temperature control. The air conditioning system is controlled from the flight engineer's environmental control panel. Bleed air supplied by the engines, auxiliary power unit (APU), or an external air source is used to operate two air conditioning units, the output of which is mixed with bleed air to heat, cool, ventilate, and pressurize the interior of the airplane.

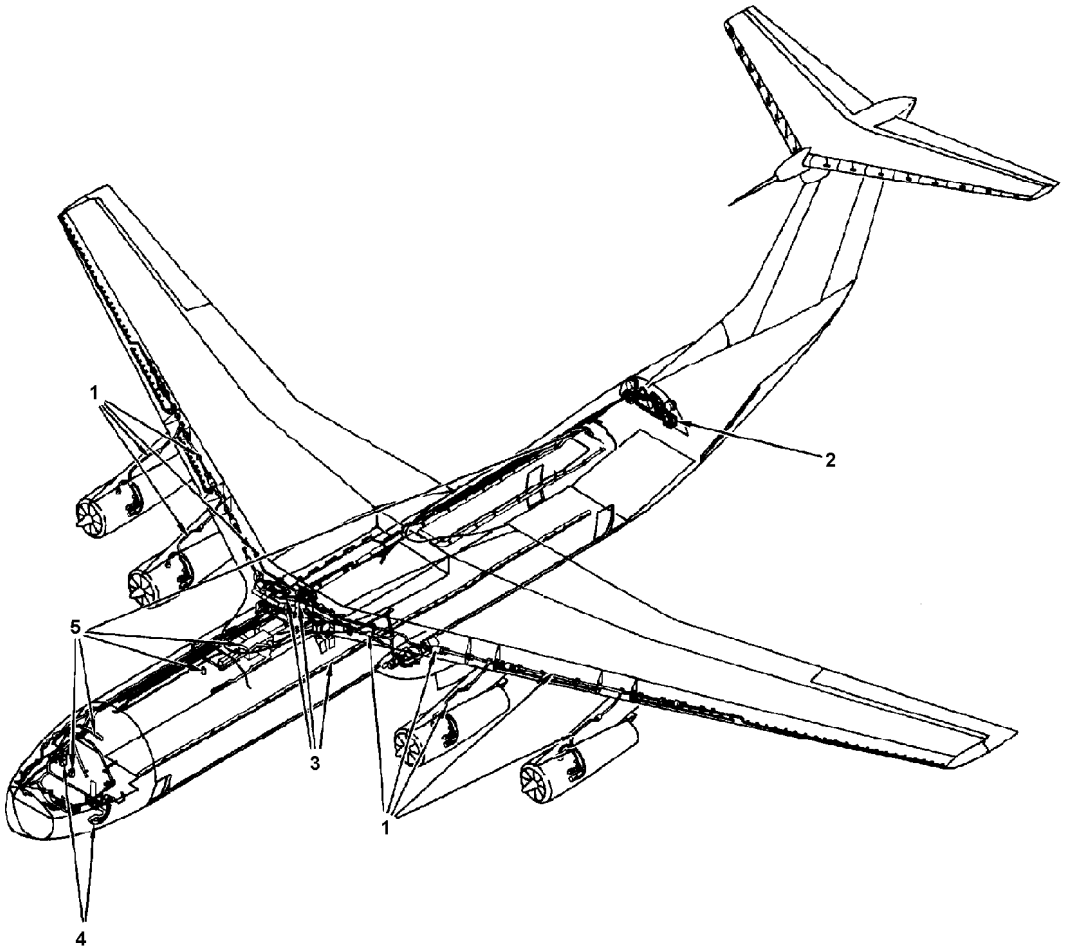

1. BLEED AIR SUBSYSTEM COMPONENTS
2. PRESSURIZATION SUBSYSTEM COMPONENTS
3. HEATING AND COOLING SUBSYSTEM COMPONENTS
4. EQUIPMENT COOLING SUBSYSTEM
5. TEMPERATURE CONTROL SUBSYSTEM COMPONENTS

C-141B Air Conditioning System

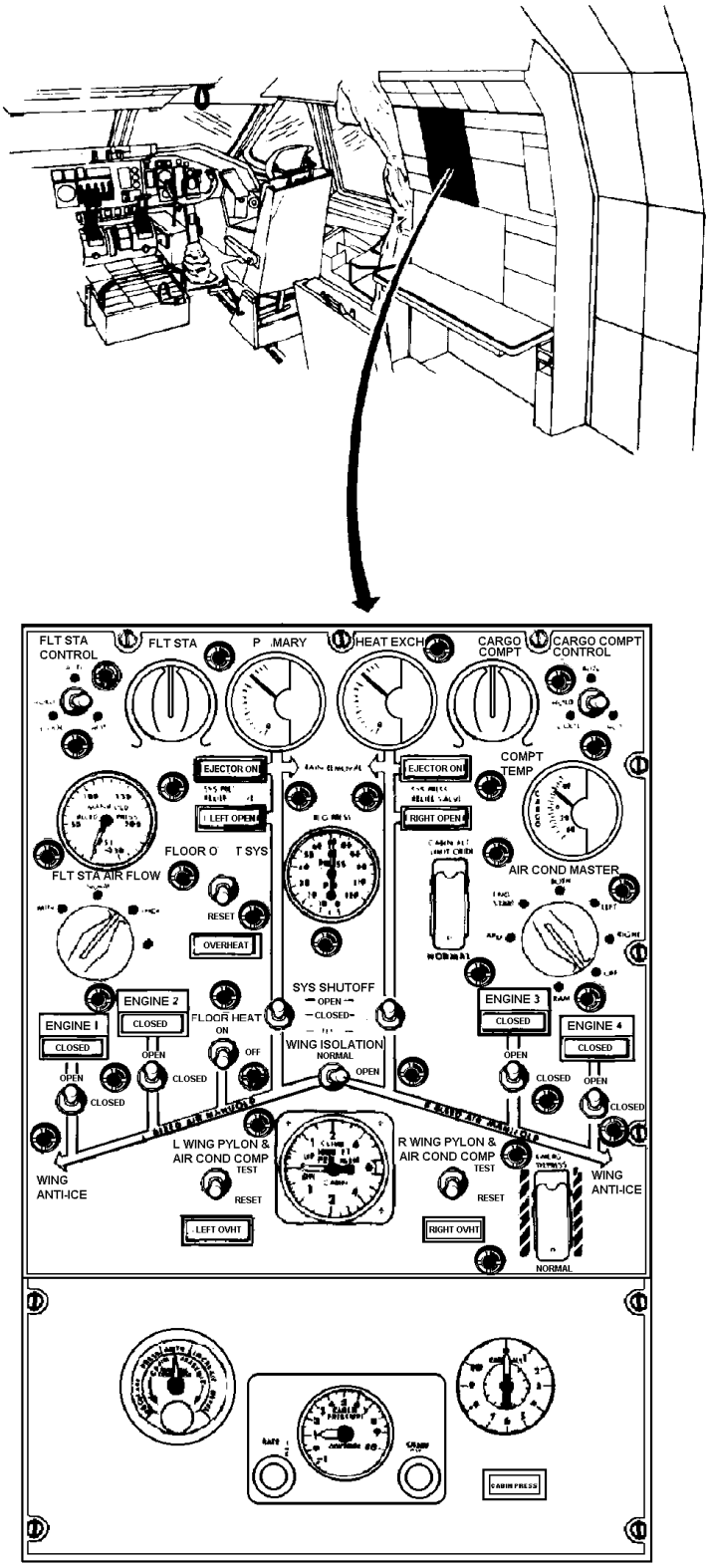

Environmental Control Panel

Bleed Air Subsystem

The bleed air subsystem is the high-pressure system that supplies the following systems: air conditioning and heating, cabin pressurization, wing anti-icing, windshield rain removal, and engine starting. The high-pressure bleed air supply in flight is extracted from each of the engines after final compression stages. On the ground, bleed air is supplied from the APU, from an external bleed air source, or from the engines when the engines are operating. Bleed air is hot, compressed air extracted from the engines. It is used to operate the air conditioning unit and mixes with cool air downstream from those units to heat the flight station and cargo compartment. This airflow into the airplane is also used to pressurize the cabin. During ground operations, the APU may be used as a source of bleed air, or a gas turbine compressor (GTC) may be connected at the high pressure bleed air connection in the forward end of the left landing gear pod. Bleed air is distributed from the engines (or from one of the ground sources) to the various systems by insulated stainless steel ducts. The flow of air is controlled by valves that are operated by positioning switches and controls on the flight engineer’s environmental control panel. The bleed air system includes the following components: engine bleed air shutoff valves, ducts and compensators, an overheat warning system, a wing isolation valve, a manifold pressure transmitter, two pressure regulator valves, two pressure relief valves, and various wing leading edge pressure relief doors.

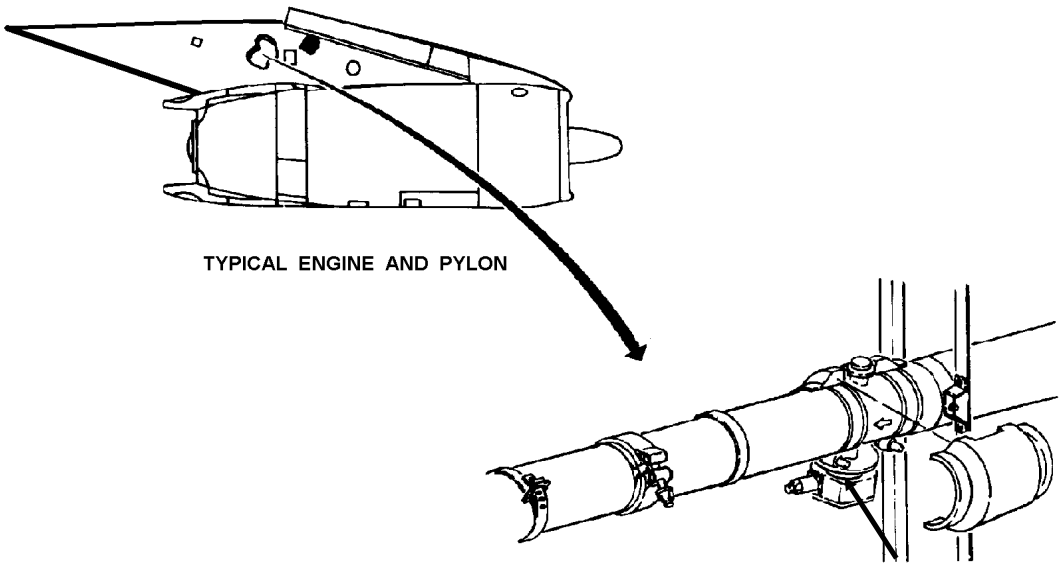

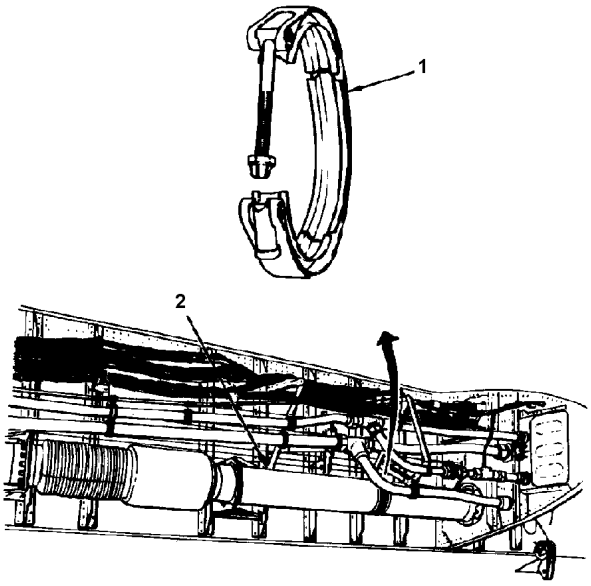

1. COUPLING
2. COMPENSATOR DUCT

Engine Bleed Air Shutoff Valve and Manifold

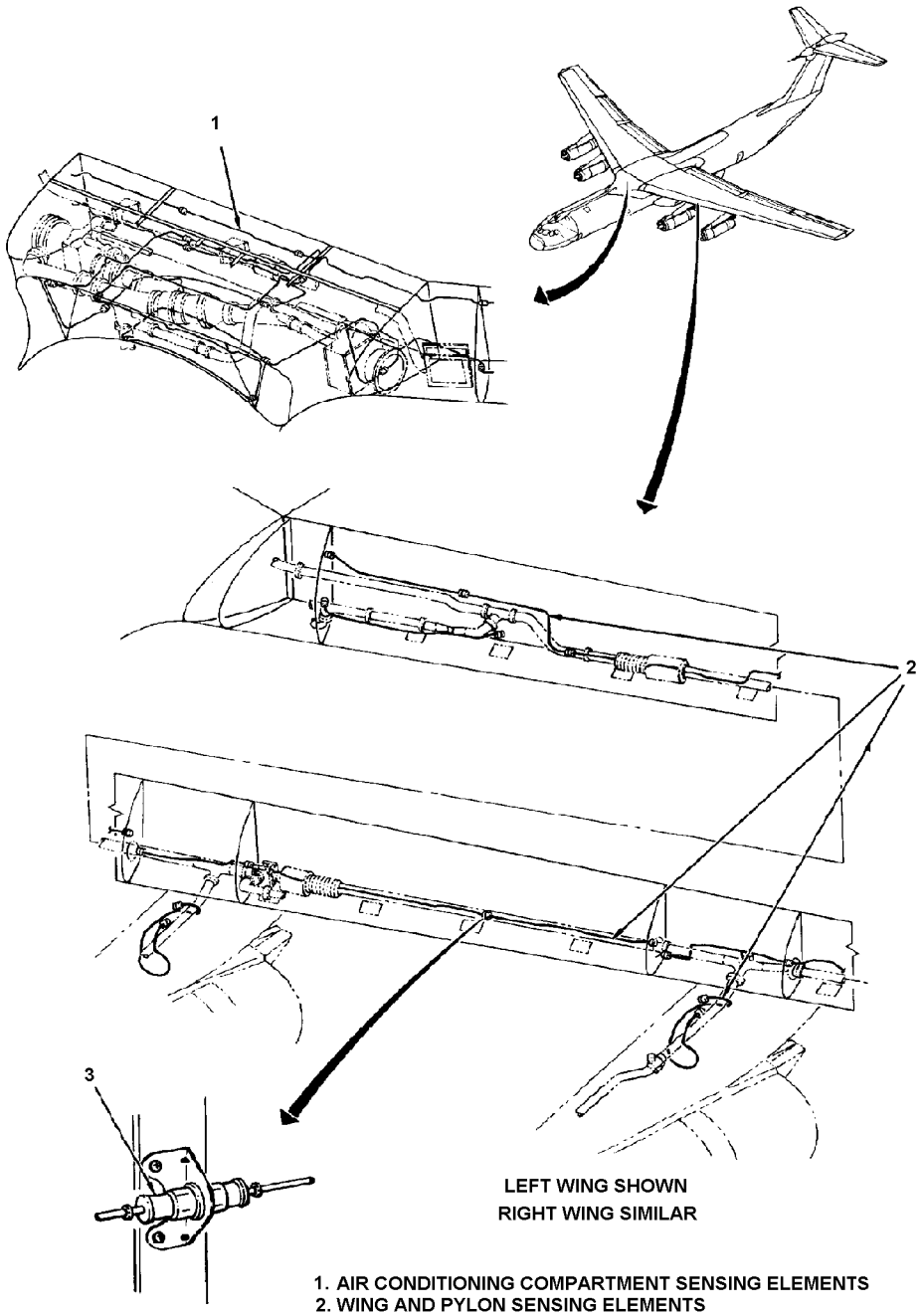

1. AIR CONDITIONING COMPARTMENT SENSING ELEMENTS
2. WING AND PYLON SENSING ELEMENTS
3. TYPICAL SENSING ELEMENT CONNECTION

Bleed Air Overheat System

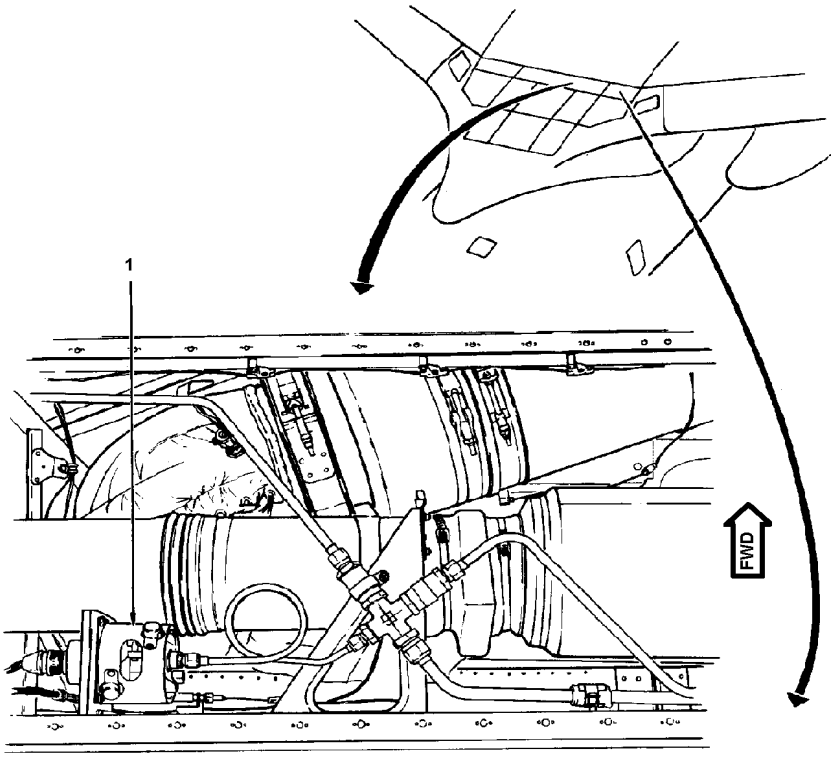

LOOKING DOWN

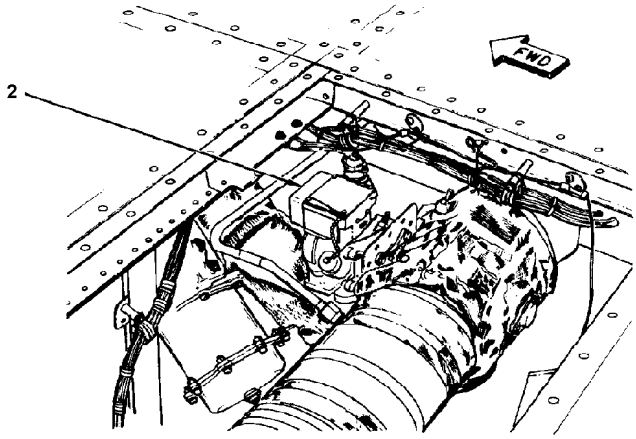

LOOKING DOWN
AND INBOARD

1. BLEED AIR MANIFOLD PRESSURE TRANSMITTER
2. WING ISOLATION VALVE

Wing Iso. Valve & Bleed Air Manifold Pressure Transmitter

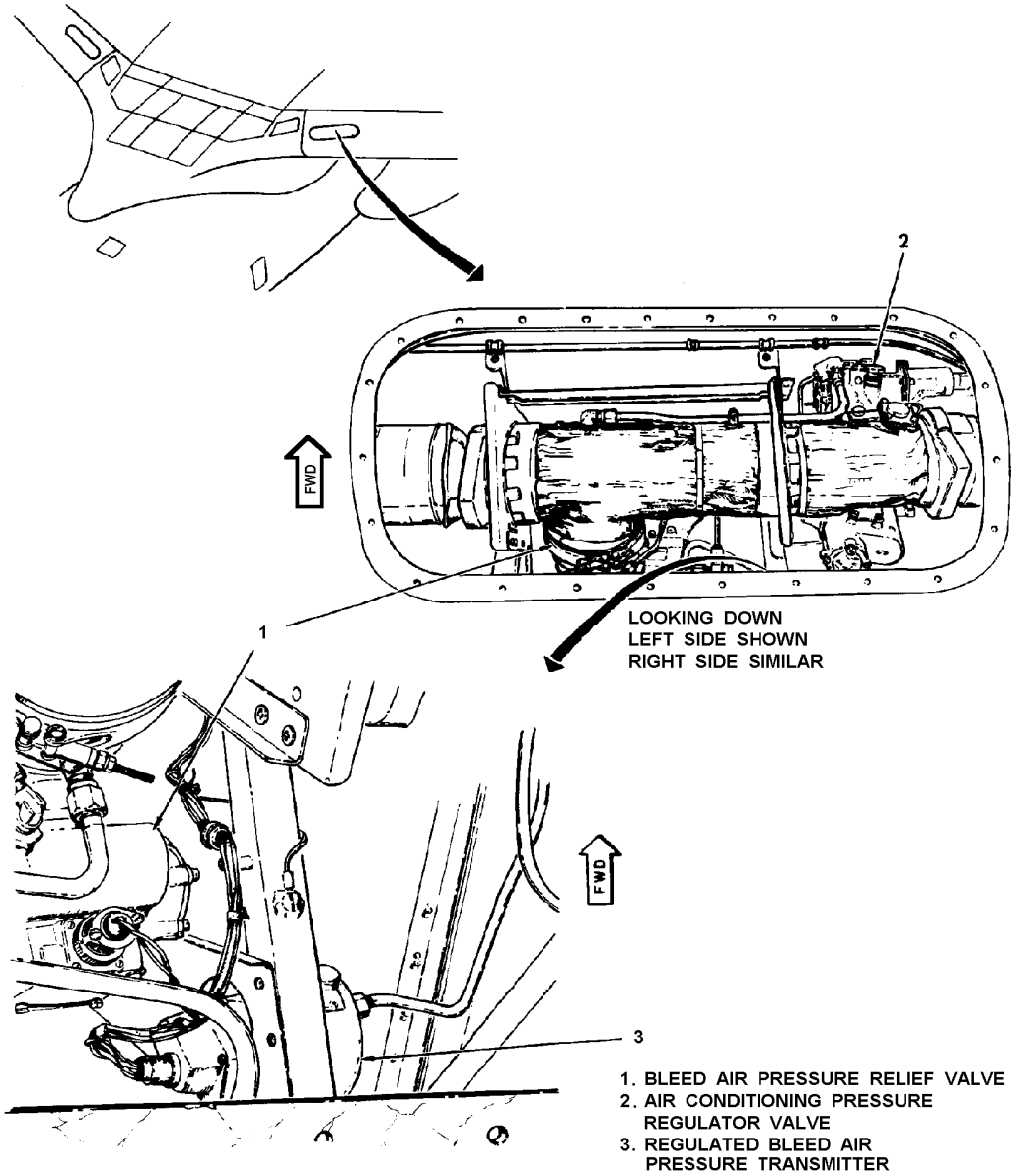

Pressure Regulator and Pressure Relief Valves (Sheet 1 of 2)

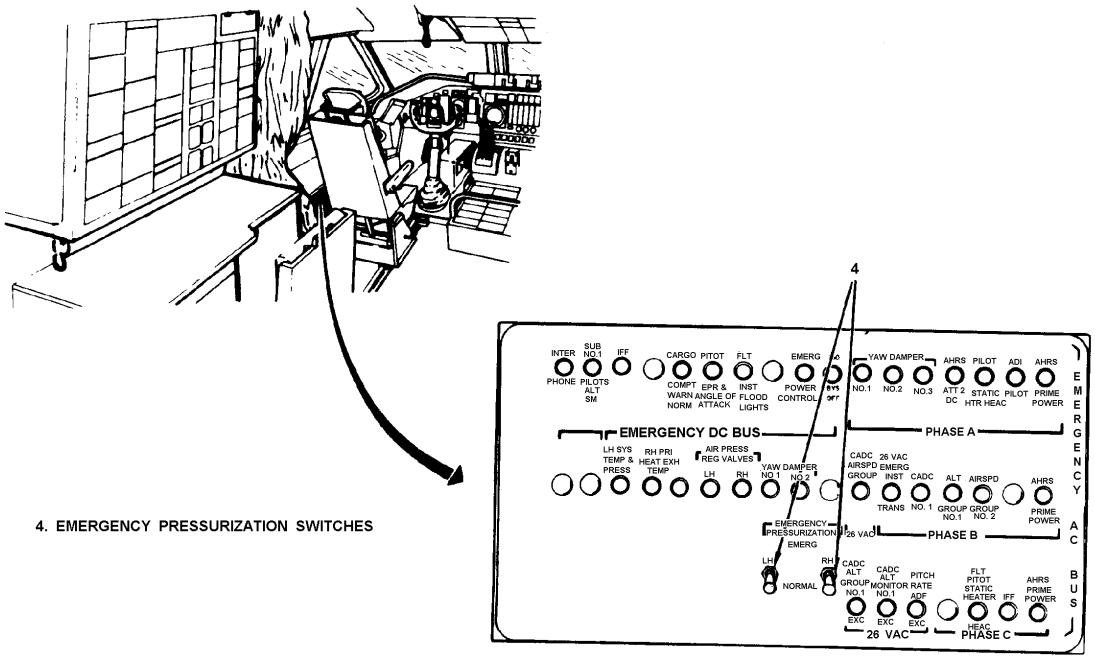

4. EMERGENCY PRESSURIZATION SWITCHES

Emergency Pressurization Switches (Sheet 2 of 2)

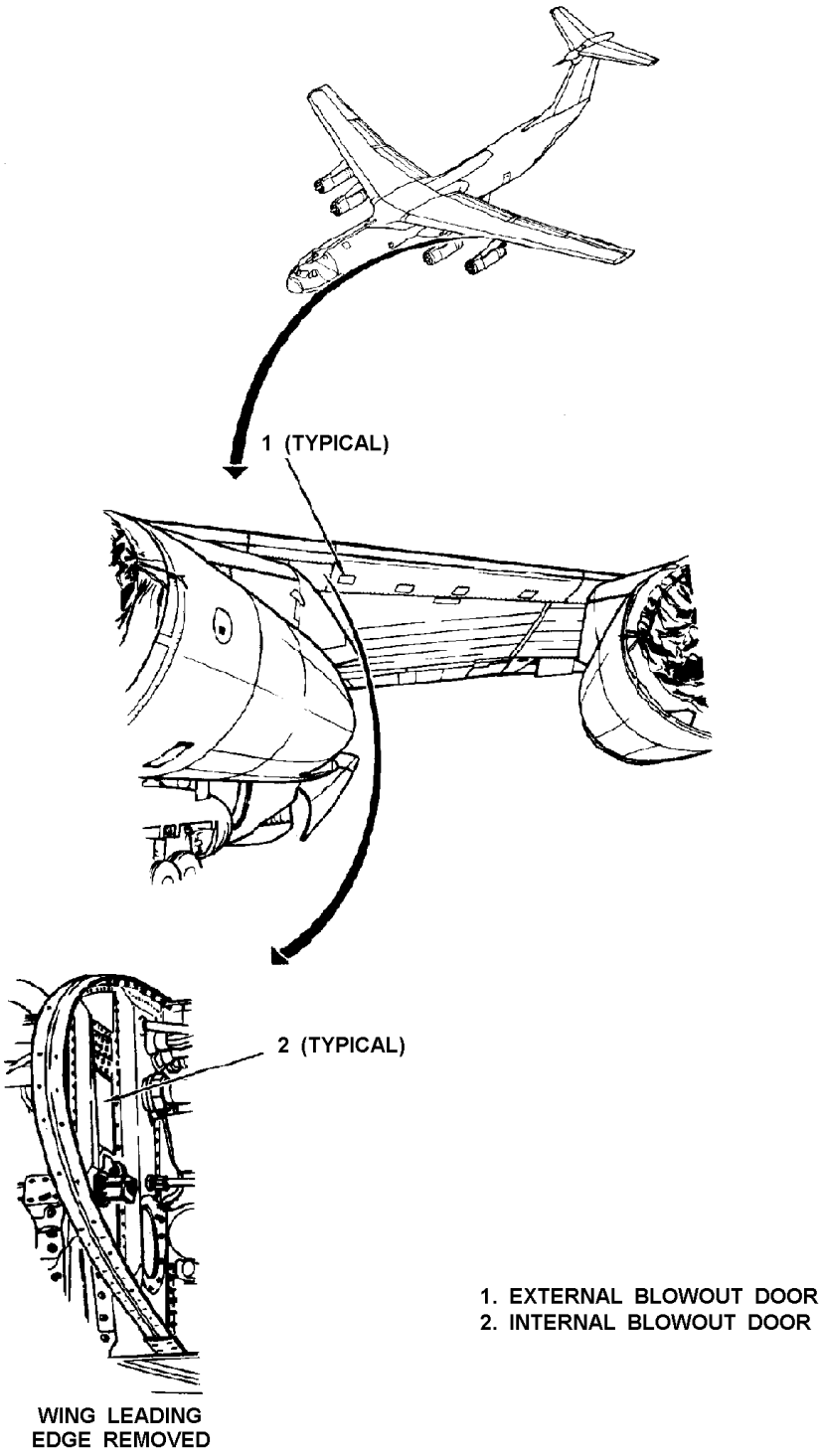

Wing Leading Edge Pressure Relief Doors

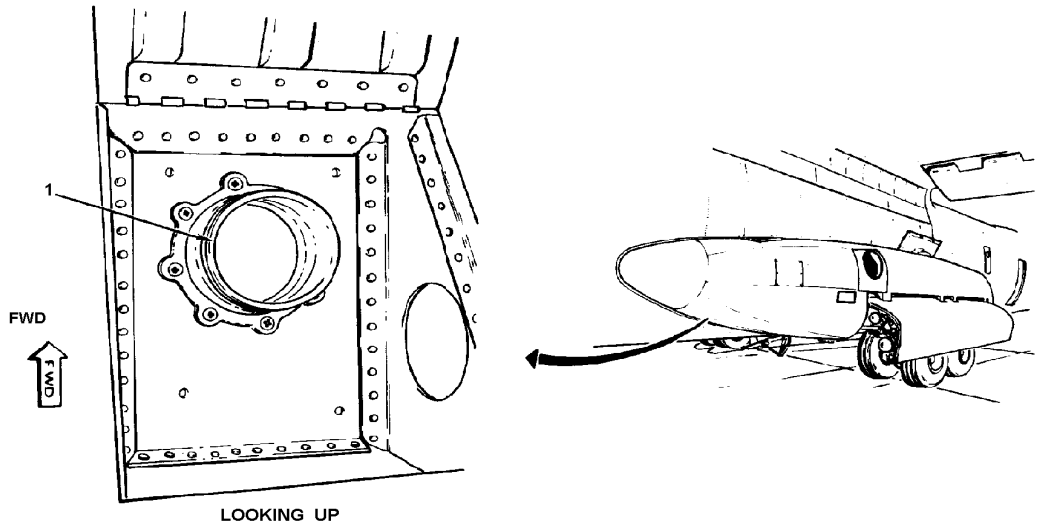

1. GROUND PRESSURE AIR CONNECTION

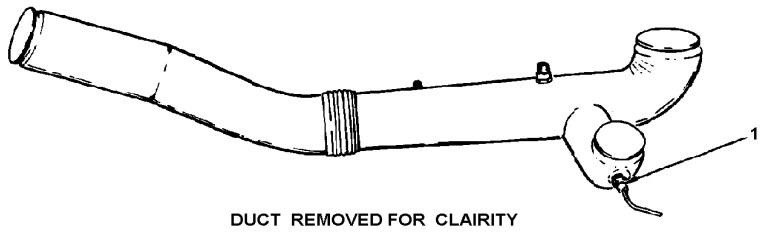

1. TYPICAL DUCT DRAIN VALVE

Ground Pressure Air Connection & Typical Duct Drain Valve

Equipment Cooling Subsystem

The majority of airplane avionics and electrical equipment is located in racks beneath the flight station floor. Discharge air from the flight station cools the AC power control panel and the circuit breaker panels at the flight engineer's station, then cools the AC electrical load center and avionics equipment below the flight deck. Four exhaust fans, two for electrical equipment cooling and two for avionics equipment cooling, propel the air over and through the equipment. Near the flight engineer's station, the two electrical equipment cooling fans pull in air from behind the AC power and circuit breaker panels and direct it through ducts to the AC electrical load center area below deck. The two electronic equipment cooling fans, in a parallel duct network, pull air through each of the avionics units by ducts connected to plenum chambers under the equipment rack shelves. Flow is proportioned to each piece of ducted equipment by orifices. The air is then expelled overboard through a cooling system flow control valve. Replaceable filters in the electrical cooling fans protect the equipment from debris. The equipment cooling subsystem includes the following components: two electrical cooling fans, two electronic cooling fans, a flow control valve, associated ducts, and warning lights on the flight engineer's panel.

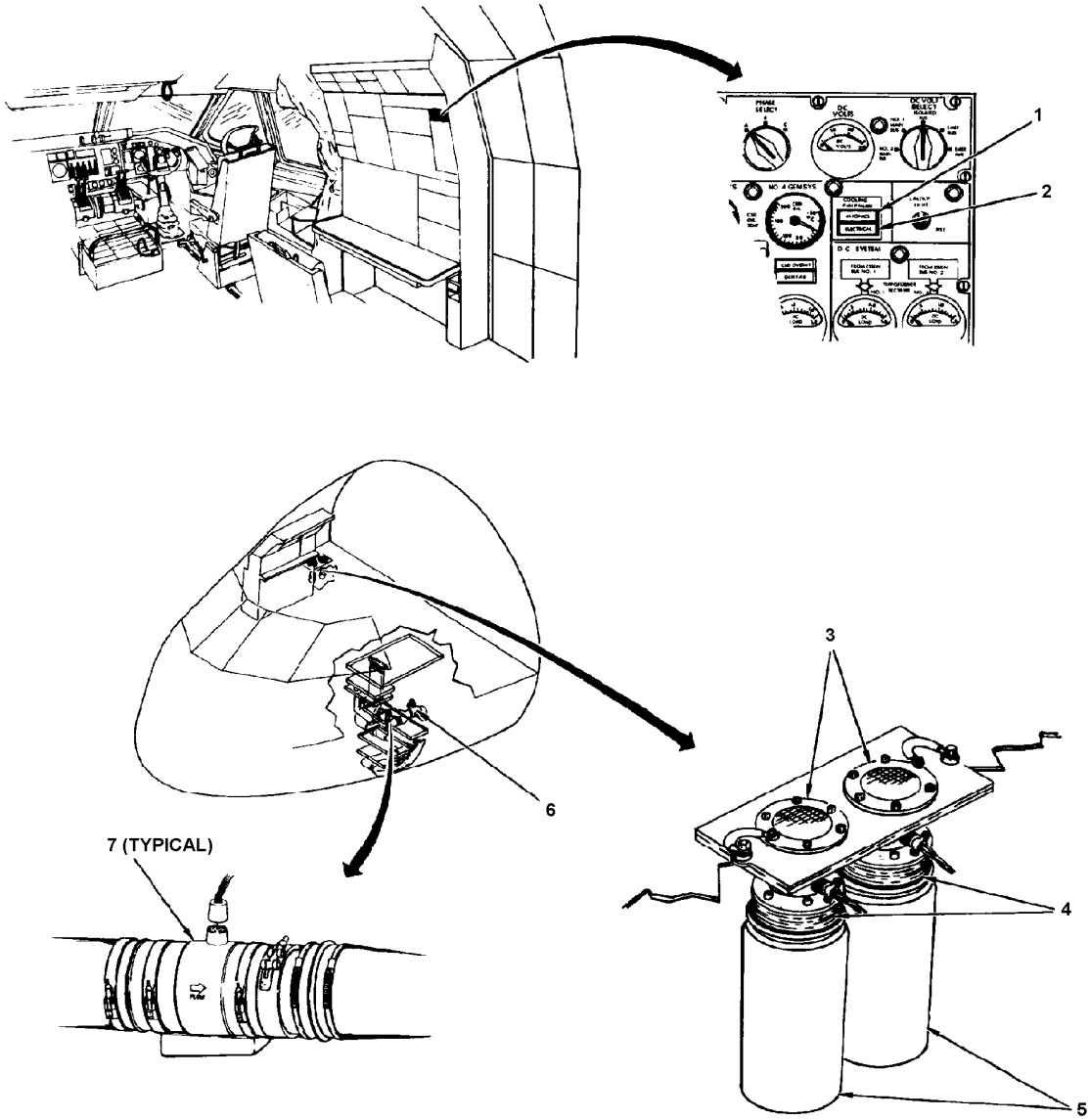

1. COOLING FAN FAILURE AVIONICS LIGHT
2. COOLING FAN FAILURE ELECTRICAL LIGHT
3. ELECTRICAL COOLING FANS
4. CHECK VALVES
5. DISPOSABLE FILTERS
6. FLOW CONTROL VALVE
7. ELECTRONIC COOLING FAN

Electrical and Electronic Equipment Cooling Components

Pressurization Subsystem

The pressurization subsystem is designed to maintain a cabin altitude of 8,000 feet at an airplane pressure altitude of 40,000 feet. The system operates by restricting the flow out of the airplane, supplied by the air conditioning system. Cabin pressure is normally controlled automatically by the automatic controller. In case of malfunction in the automatic controller, the cabin pressure can be decreased or increased by means of a manual control. Maximum pressure differential is limited to 8.6 psig by pressure relief mechanisms in the system. The setting on the relief provisions is such that relief cannot occur below 8.3 psig even with one outflow safety valve inoperative. As an added safety feature, each outflow valve contains a differential control which opens the valve to limit the pressure differential to the maximum of 8.6 psig. Each outflow valve is capable of limiting cabin pressure differential to 8.6 psig independently. Cabin altitudes from minus 1,000 to plus 10,000 feet can be selected on the automatic controller; however, the differential pressure controls of the automatic controller or the outflow valves will override the preselected cabin pressure to limit the differential pressure to the maximum of 8.6 psig. It is possible, therefore, to select and maintain a sea level cabin altitude up to a flight altitude of approximately 21,000 feet. Cabin altitude rate of climb during climb and descent can be selected from approximately 200 to 2,000 feet per minute. The cabin altitude limit control is set at 13,000 (+/- 1,500) feet. This control serves to limit cabin altitude in case of a malfunction which would allow the outflow valve to open. Unpressurized cabin differential pressure with maximum air conditioning flow does not exceed 3.5 inches of mercury. Maximum negative differential pressure is limited to 0.40 psig. The pressurization subsystem includes the following components: automatic controller, a manual controller, two outflow valves, a cabin pressure control venturi, a control fan and venturi, a jet pump pressure regulator, two solenoid valves, a pressurization control panel, and two negative pressure relief check valves.

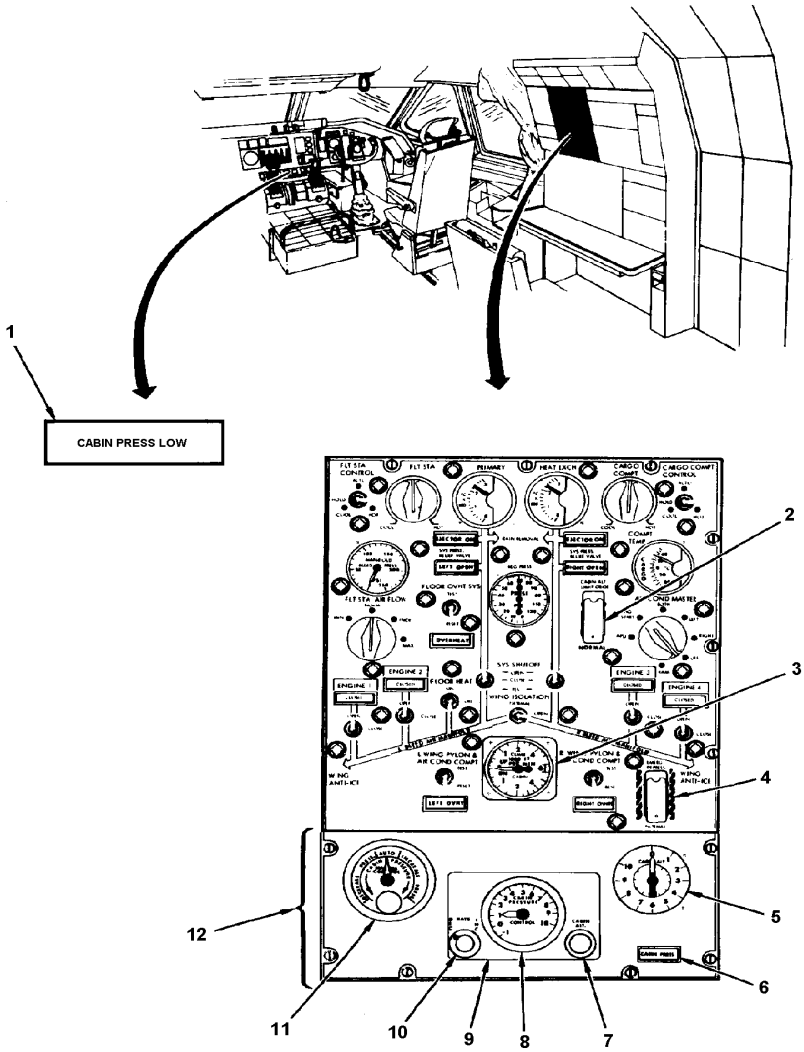

1. CABIN PRESS. LOW ANNUNCIATOR LIGHT
2. CABIN ALT. LIMIT OVERRIDE SWITCH
3. CLIMB CABIN GAGE
4. EMERGENCY DEPRESS SWITCH
5. CABIN ALT. GAGE
6. CABIN PRESS. WARNING LIGHT
7. CABIN ALT. CONTROL
8. CABIN PRESSURE CONTROL INDICATOR
9. AUTOMATIC CONTROLLER
10. RATE CONTROL
11. MANUAL CONTROLLER
12. PRESSURIZATION PANEL

Pressurization and Indicating Components (Sheet 1 of 2)

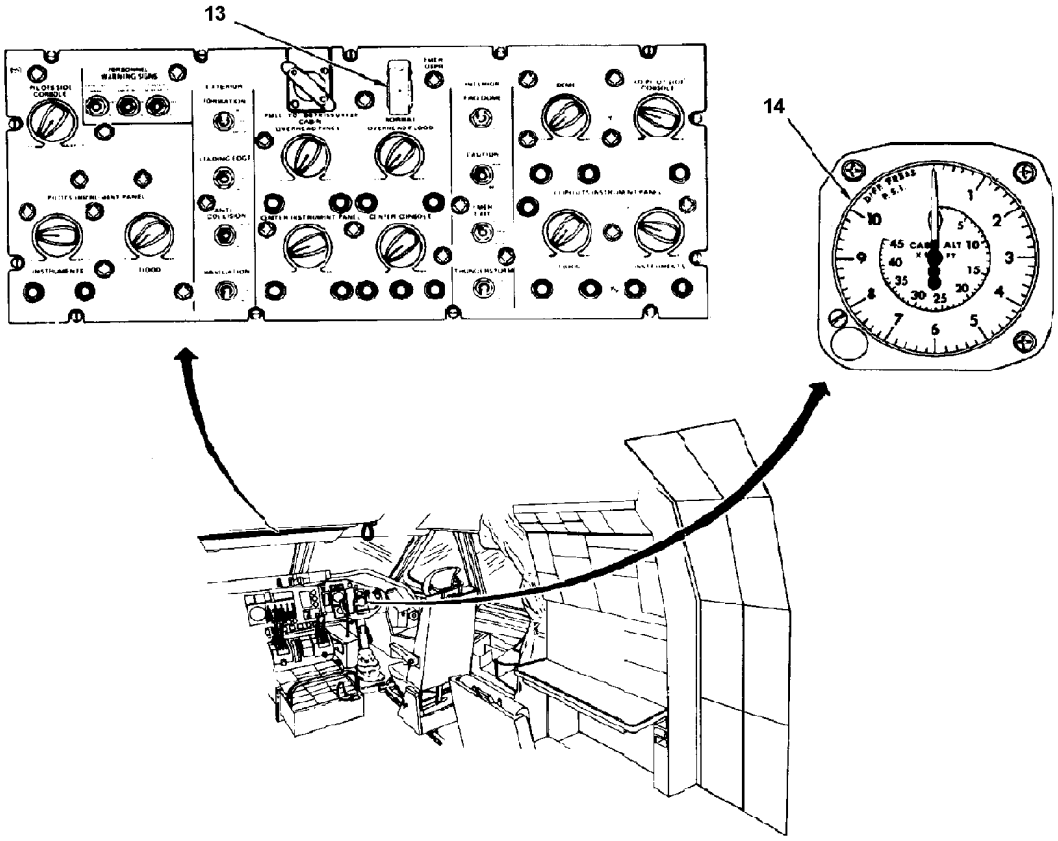

13. PILOT'S EMERGENCY DEPRESSURIZATION GAGE
14. COPILOT'S CABIN ALT. GAGE

Pressurization and Indicating Components (Sheet 2 of 2)

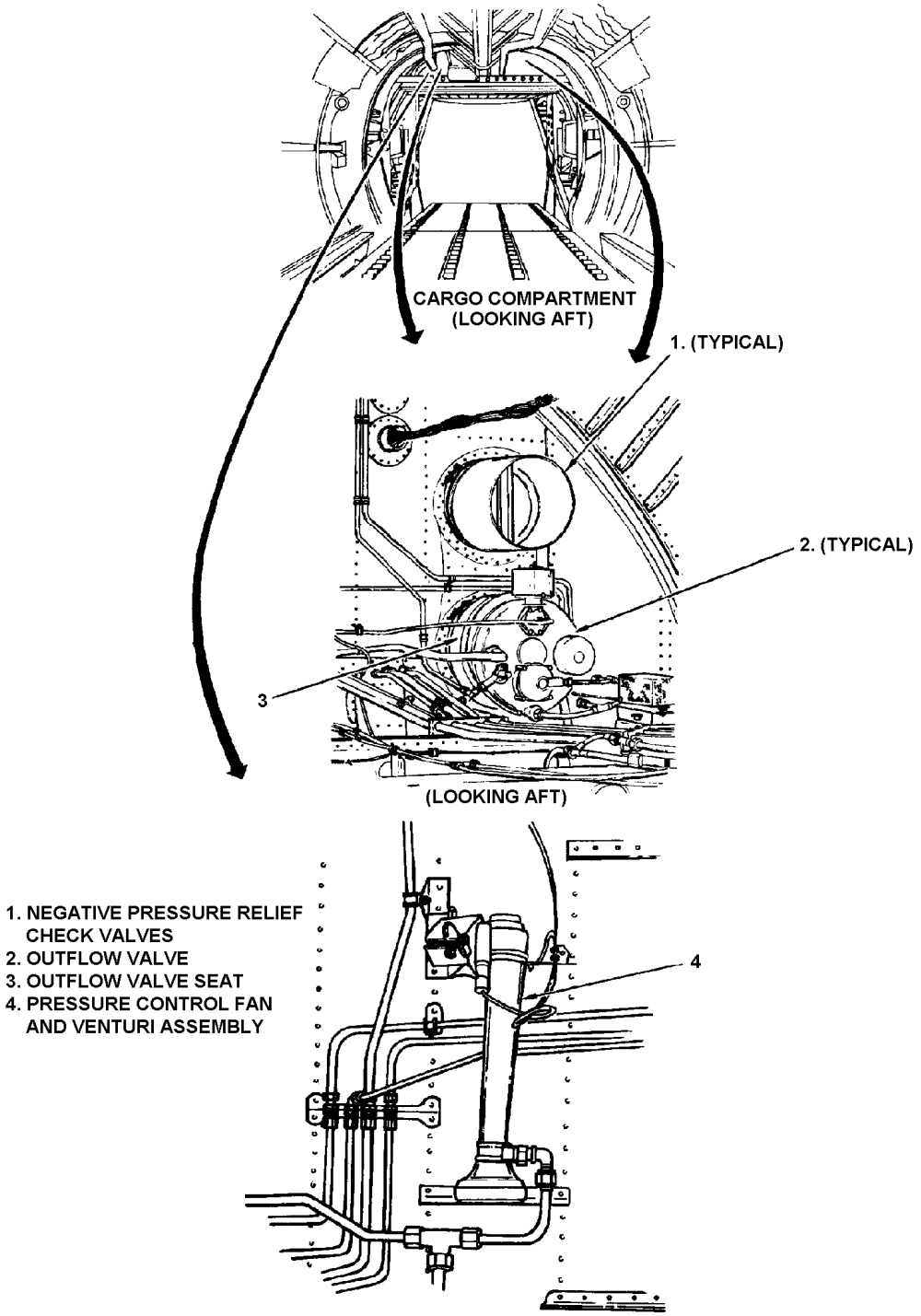

Negative Pressure Relief Check Valves and Related Components

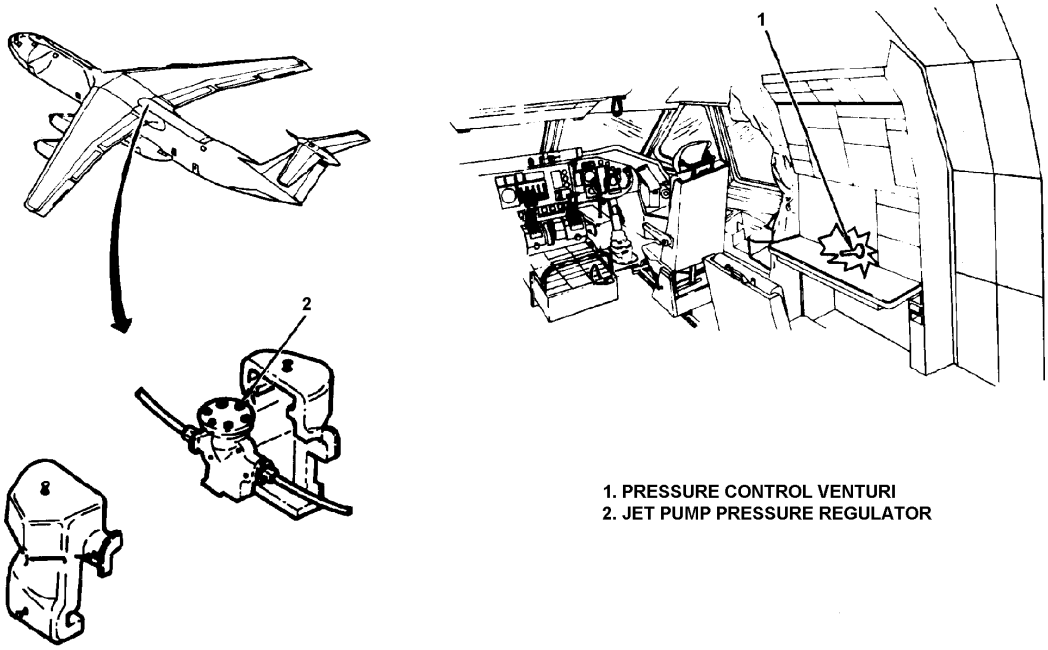

Cabin Pressure Control Venturi & Jet Pump Pressure Regulator

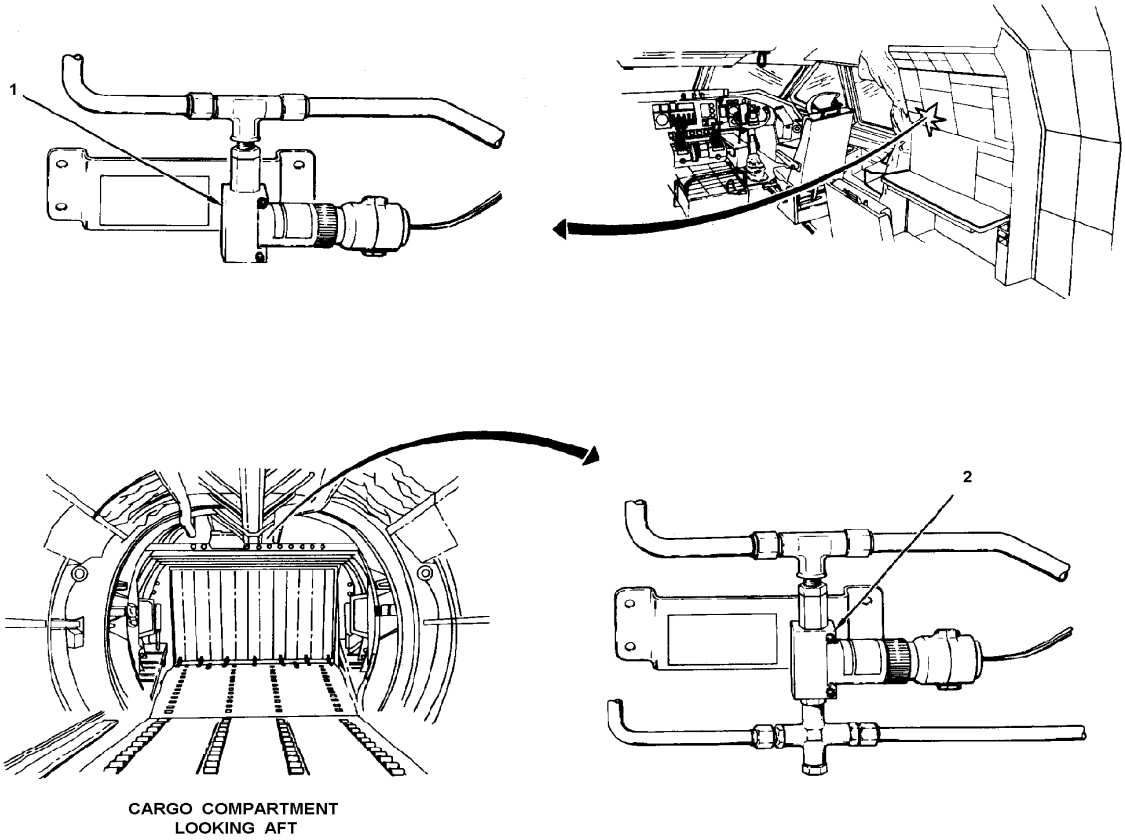

1. NO. 2 SOLENOID VALVE
2. NO. 1 SOLENOID VALVE

No. 1 and No. 2 Solenoid Valves

Heating and Cooling Subsystem

Heating, cooling, and ventilation are provided for the flight station and the cargo compartment by two parallel air conditioning systems sharing a common distribution duct system. Normally, the left system and right system are operated in unison, but either is capable of providing limited heating, cooling, and pressurization to both compartments. Both systems utilize bleed air from the internal diameter of the engine diffuser cases while in flight. On the ground, pressurized air can be supplied to both systems by the APU or by an external air source. Control of cargo floor temperature is provided by the cargo floor heat system. In each air conditioning system, hot air from the bleed air manifold flows through a primary heat exchanger, then a refrigerator unit. In each refrigerator unit, air flows first through a secondary heat exchanger and then through an expansion turbine, where air temperature is further reduced. Refrigerated air is then mixed with another supply of air ducted from the primary heat exchanger, in amounts required to regulate final air temperature. The air then passes through the distribution system. The cargo floor heat system obtains hot bleed air directly from the bleed air manifold. This hot air passes through a modulating valve and ejectors into the underfloor distribution duct, where it mixes with air entrained from the underfloor compartment. Temperature of the heated air is regulated by the modulating valve, which is controlled by a pneumatic type thermostat and a pneumatic-type temperature anticipator located in the distribution duct. Control switches and gages for the heating and cooling subsystem are located on the flight engineer's environmental control panel. The AIR COND MASTER switch, a seven-position rotary-type switch on the environmental control panel, is used to select the type of air conditioning control desired. The heating and cooling subsystem includes the following components: two primary heat exchangers, two refrigerator units, two water separators, a cargo floor heat duct, a floor overheat system, and various ducts, sensors, control boxes, and valves.

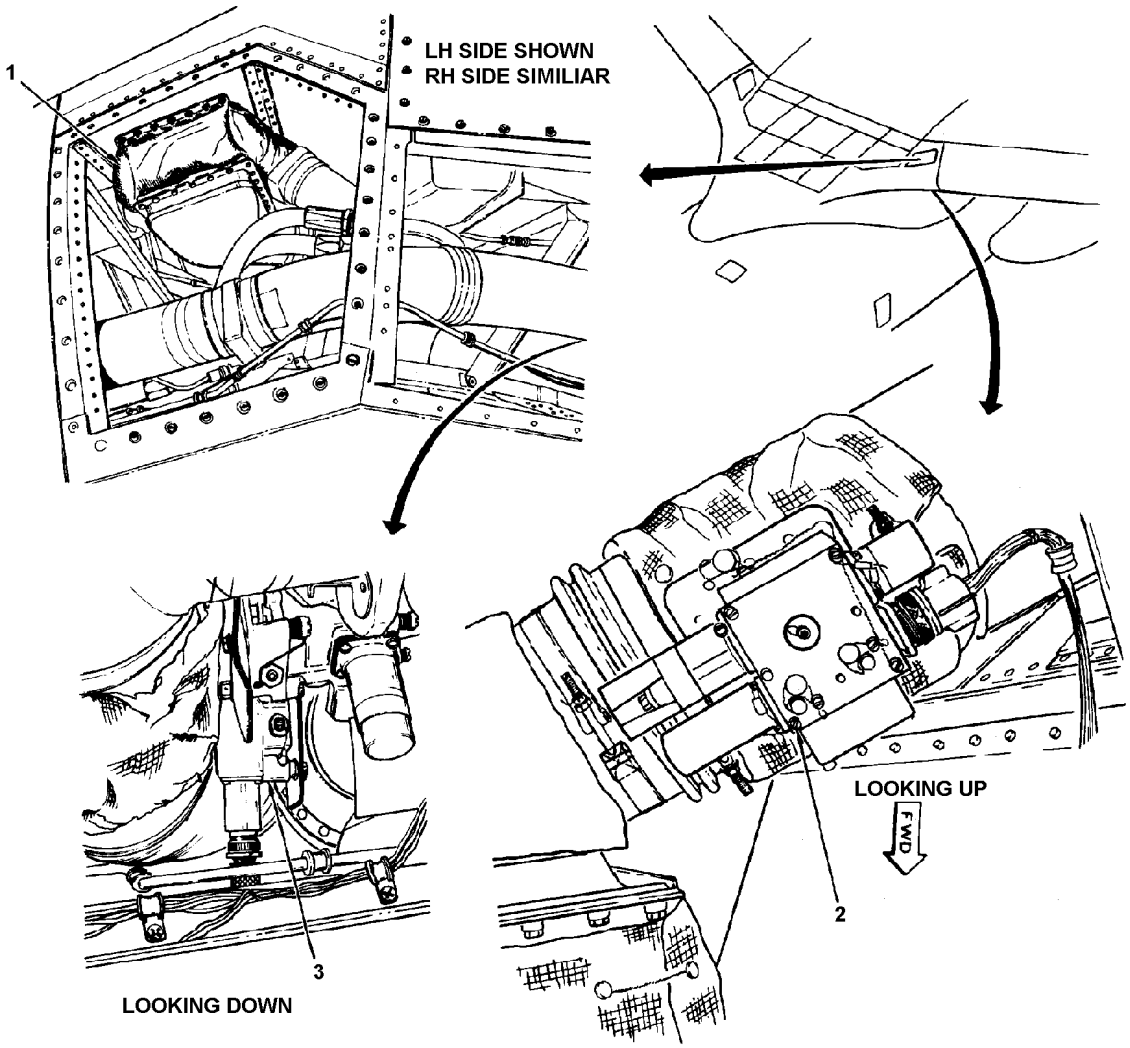

1. PRIMARY HEAT EXCHANGER
2. PRIMARY HEAT EXCHANGER COOLING AIR CONTROL VALVE
3. EJECTOR SHUTOFF VALVE

Primary Heat Exchanger System (Sheet 1 of 2)

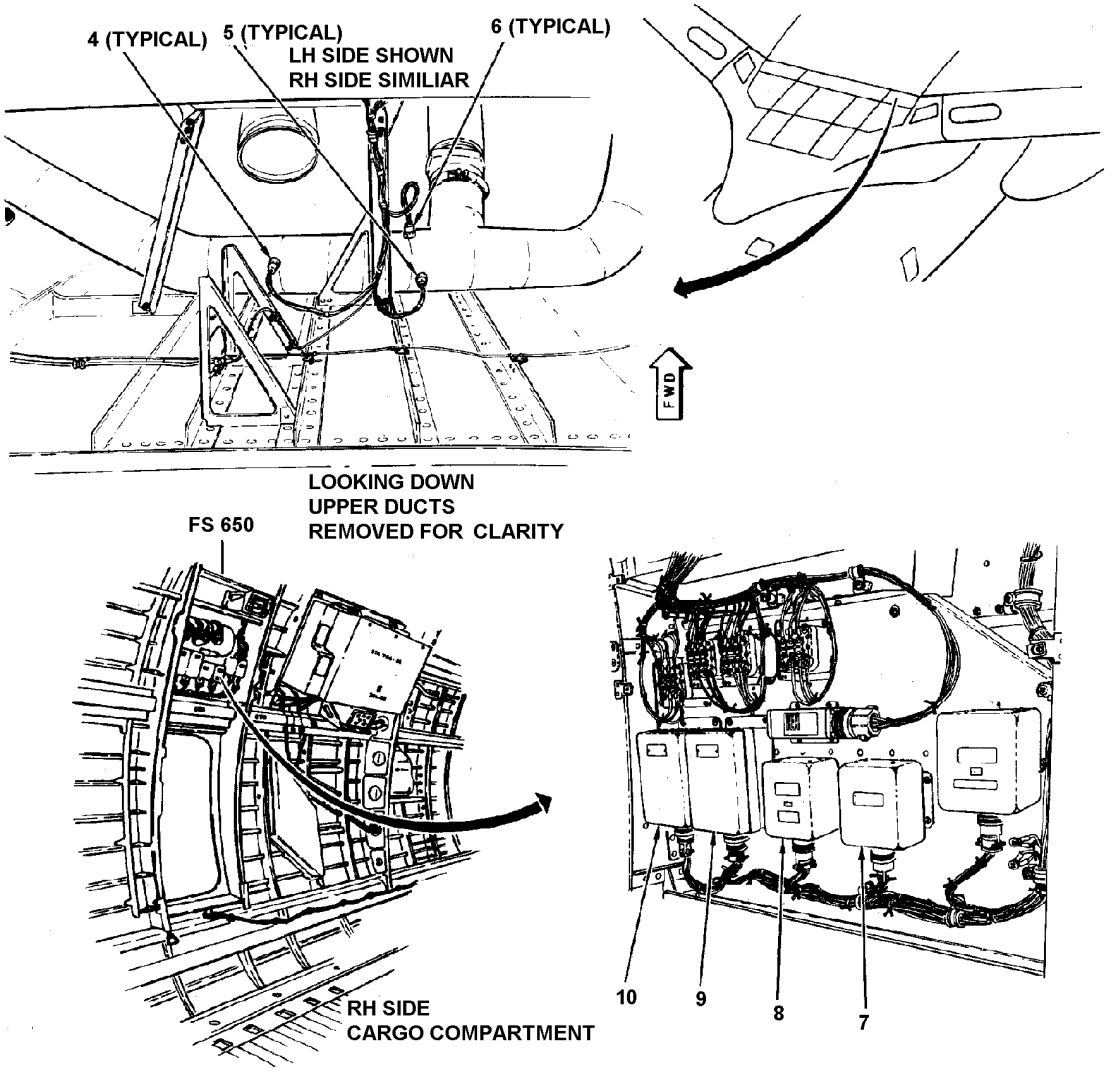

4. DISCHARGE TEMPERATURE BULB
5. DISCHARGE TEMPERATURE SENSOR
6. TEMPERATURE ANTICIPATOR AND HIGH LIMIT SWITCH
7. RH WATER SEPERATOR LOW LIMIT TEMPERATURE CONTROL BOX
8. LH WATER SEPERATOR LOW LIMIT TEMPERATURE CONTROL BOX
9. RH PRIMARY HEAT EXCHANGER DISCHARGE TEMPERATURE CONTROL BOX
10. LH PRIMARY HEAT EXCHANGER DISCHARGE TEMPERATURE CONTROL BOX

Primary Heat Exchanger System (Sheet 2 of 2)

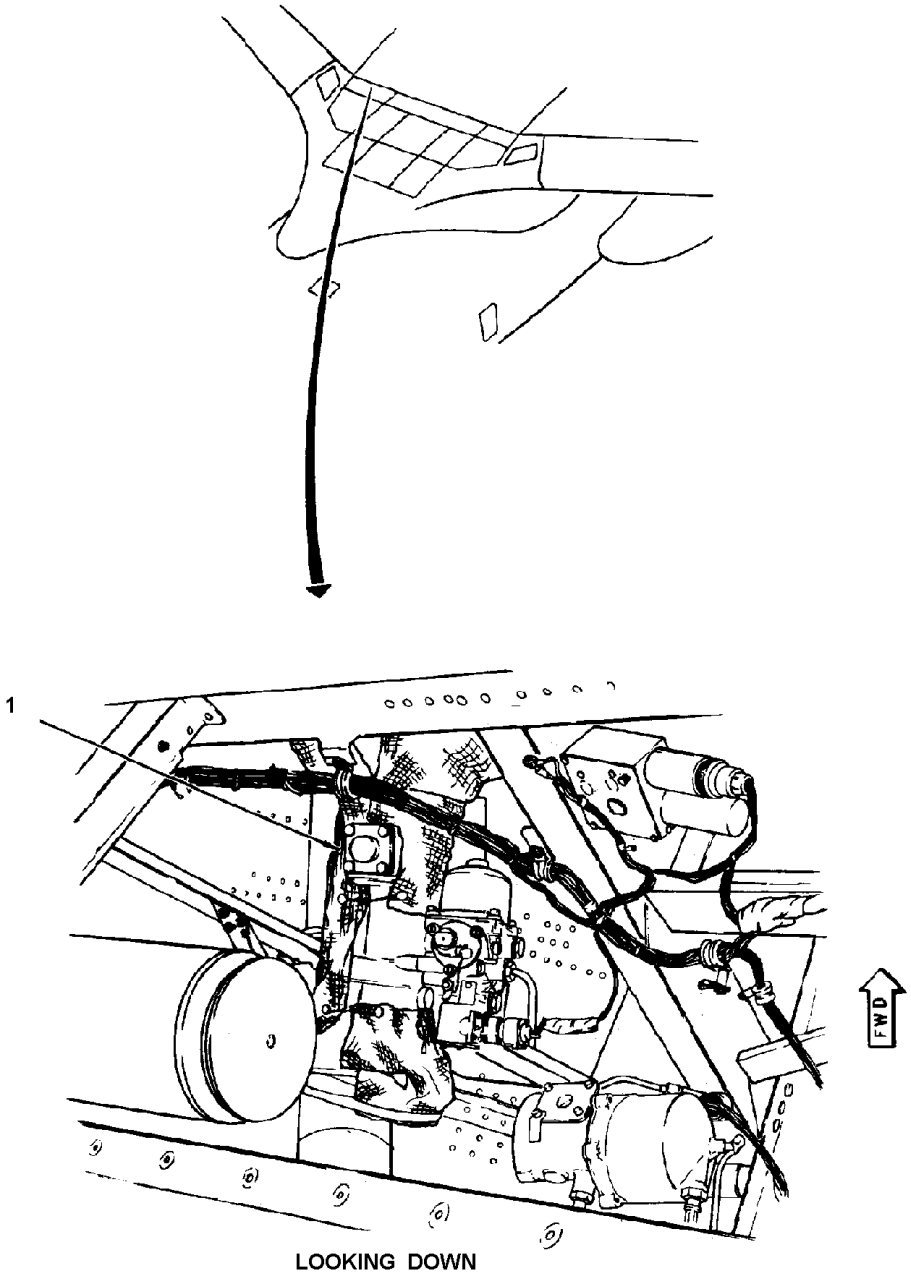

LOOKING DOWN
RH SIDE SHOWN
LH SIDE SIMILAR

1. FLOW CONTROL VALVE

Air Conditioning Flow Control Valve

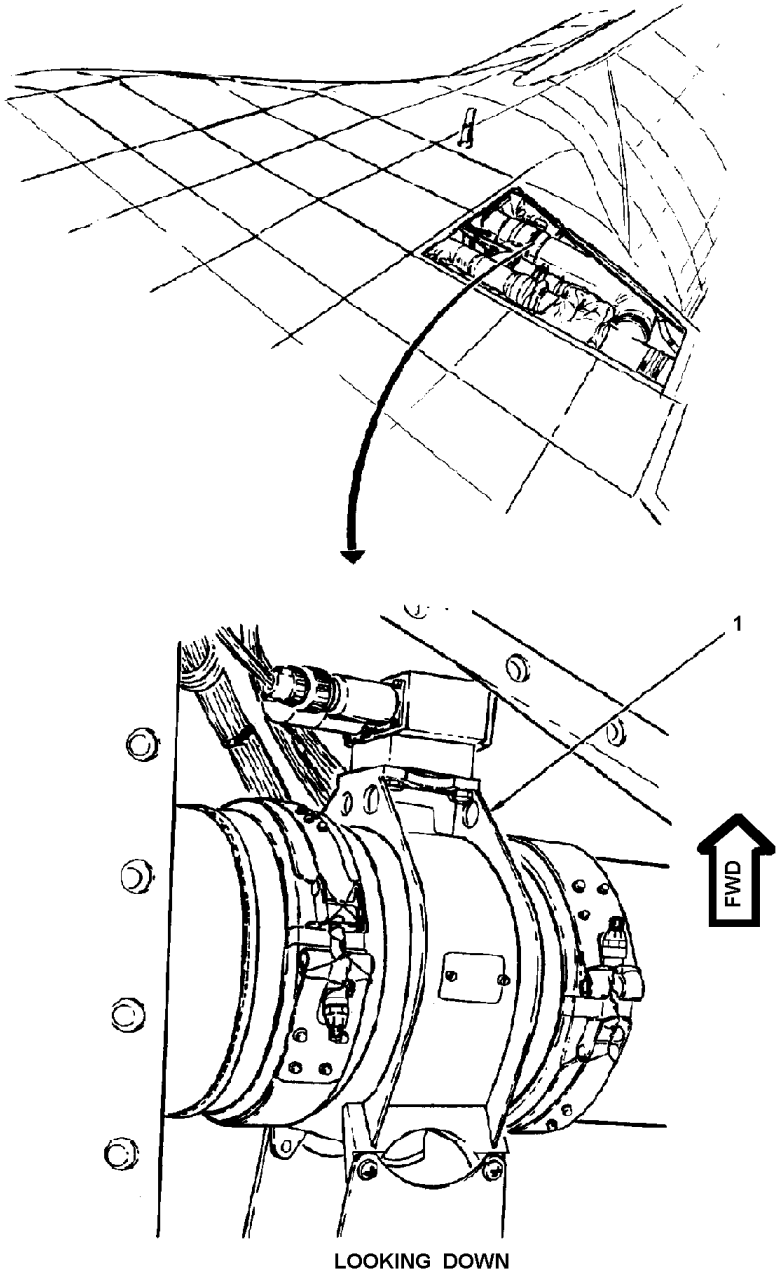

1. RAM AIR VENT SHUTOFF VALVE

Ram Air Vent Shutoff Valve

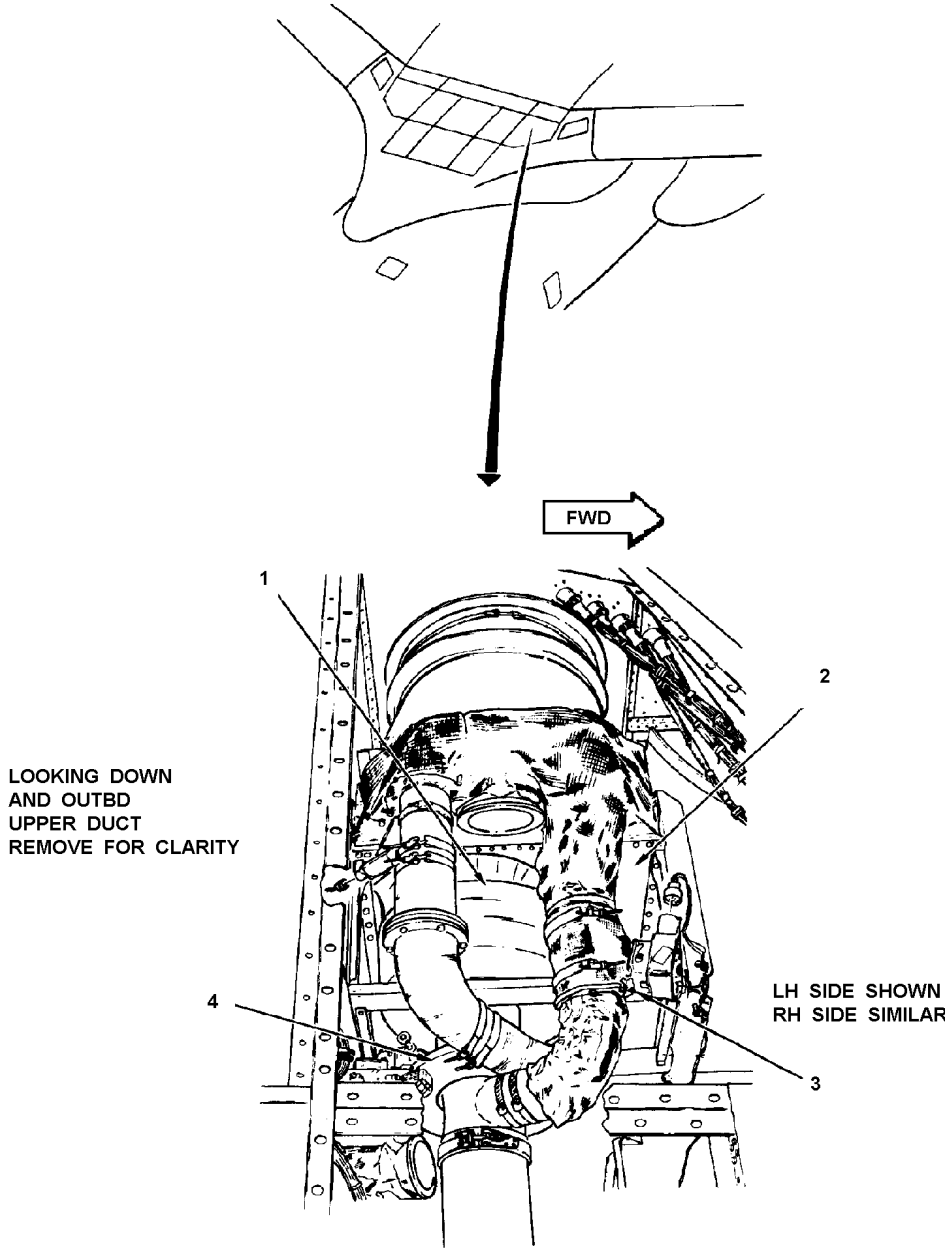

1. FAN
2. SECONDARY HEAT EXCHANGER
3. TURBINE BYPASS VALVE
4. COOLING TURBINE

Air Conditioning Refrigerator Unit

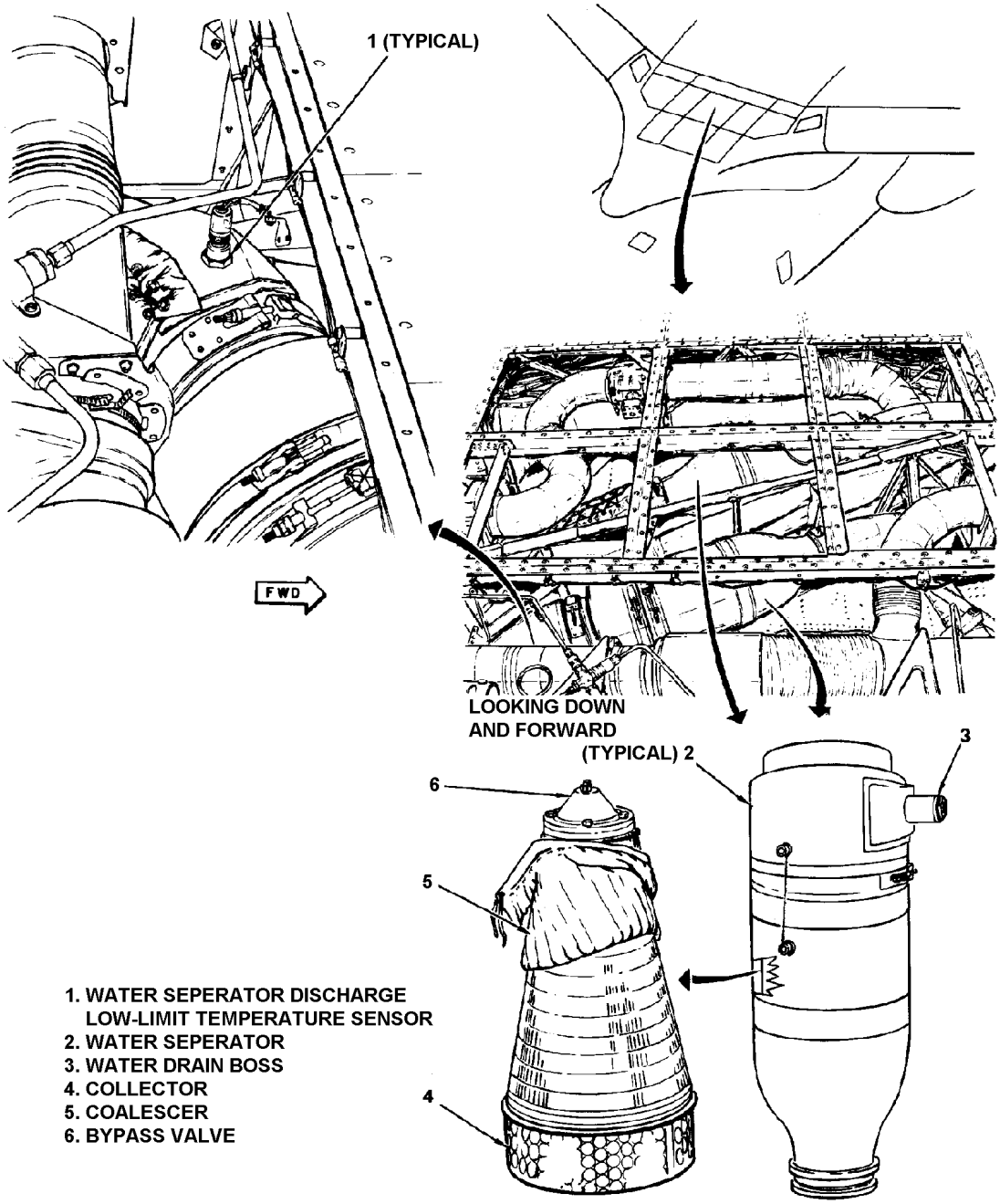

Water Separator System

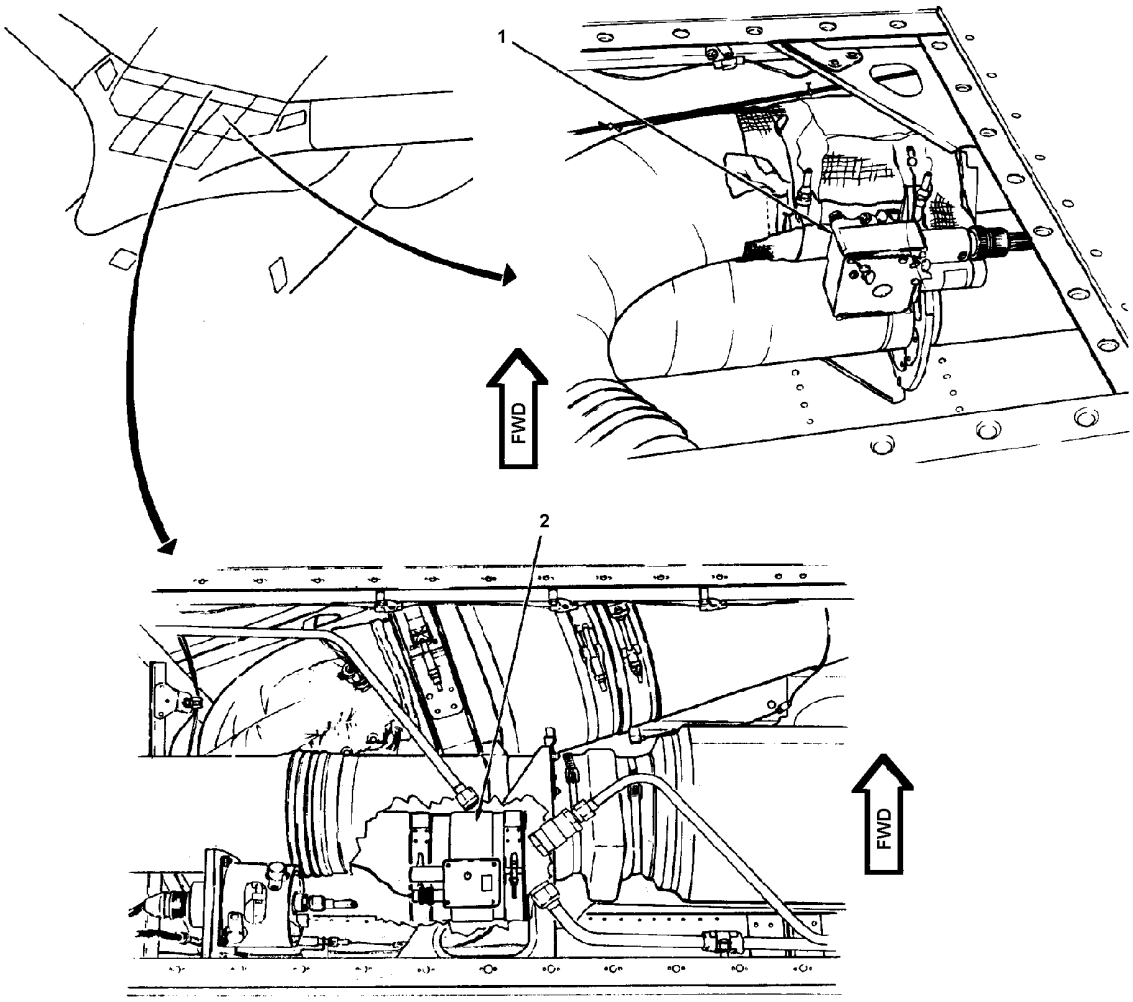

LOOKING DOWN

1. FLIGHT STATION TEMPERATURE CONTROL VALVE
2. CARGO COMPARTMENT TEMPERATURE CONTROL VALVE

Temperature Control Valve

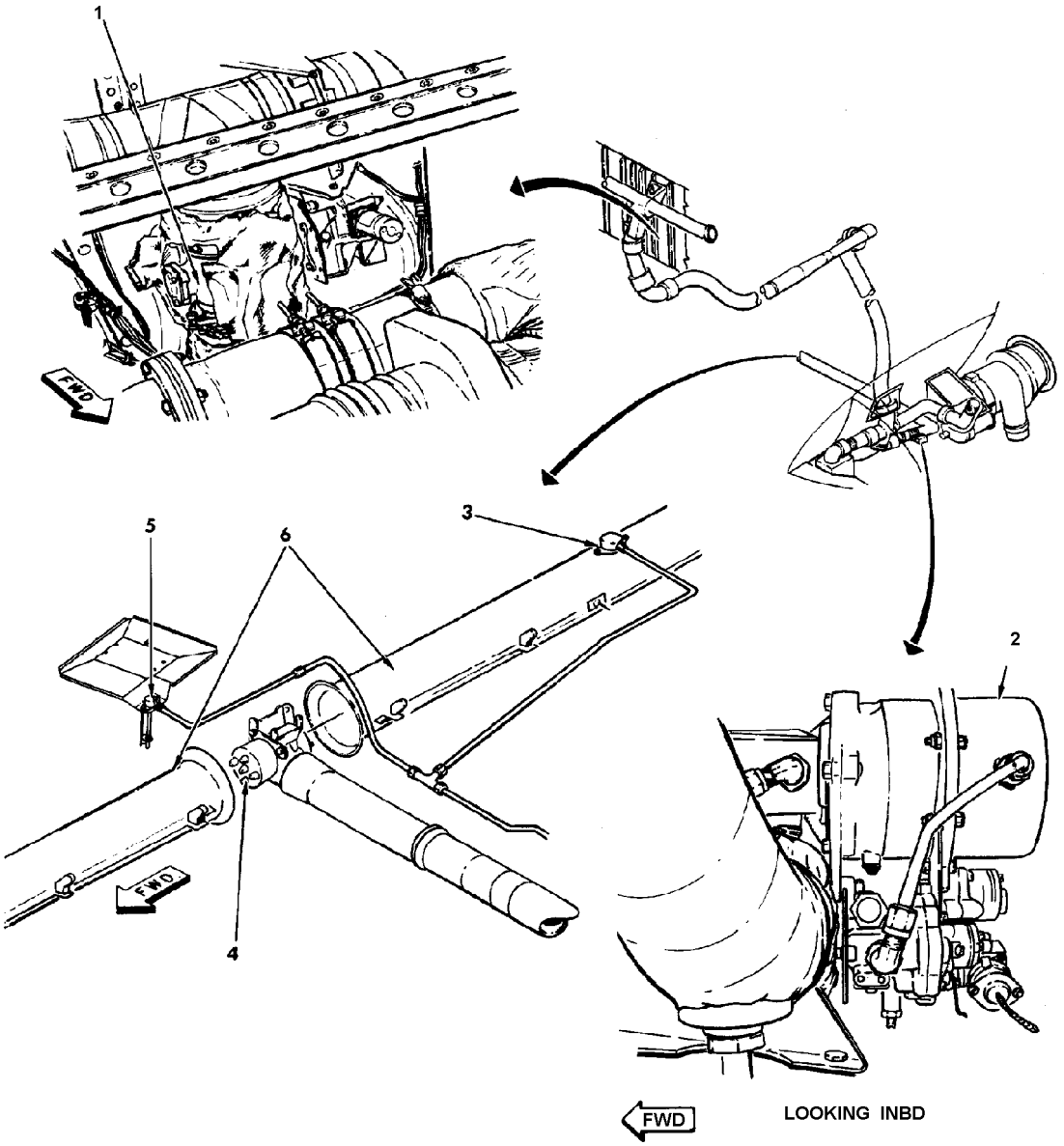

1. CARGO FLOOR HEAT SHUTOFF VALVE
2. FLOOR HEAT MODULATING VALVE
3. TEMPERATURE ANTICIPATOR
4. FLOOR HEAT EJECTORS
5. CONTROL THERMOSTAT
6. FLOOR HEAT DUCTS

Cargo Floor Heat System

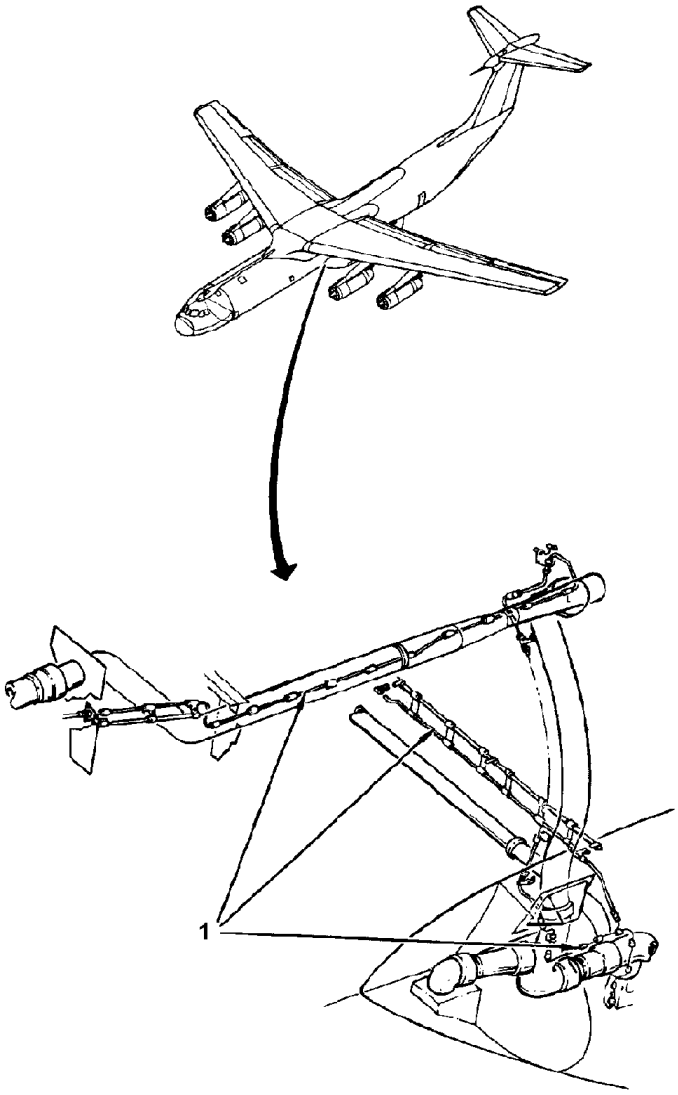

1. FLOOR OVERHEAT SENSING ELEMENTS

Floor Overheat Sensing Elements

Temperature Control Subsystem

The temperature control subsystem regulates the temperature and distribution of air from the heating and cooling subsystem. This is accomplished by the use of various temperature sensors and temperature anticipators that generate signals to temperature control boxes which, in turn, regulate the temperature of air being supplied by the heating and cooling subsystems. The flight station and cargo compartment have separate controls on the environmental control panel. The percentage of available air delivered to each station is determined by the diverter and alternate air shutoff valves installed in the left and right system supply ducts. Switches are provided that allow four modes of temperature control. Various sensors and valves combine to provide the desired degree of heating, cooling, and ventilation. Low pressure distribution ducts conduct conditioned air into the flight station and cargo compartment. The flight engineer controls and monitors the temperature control subsystem with switches and rheostats on the environmental control panel. The temperature control subsystem includes the following components: two temperature control boxes and associated sensors, two temperature control switches, two temperature control rheostats, a network of distribution ducts, a diverter valve, an alternate air shutoff valve, and a cargo compartment recirculating air fan.

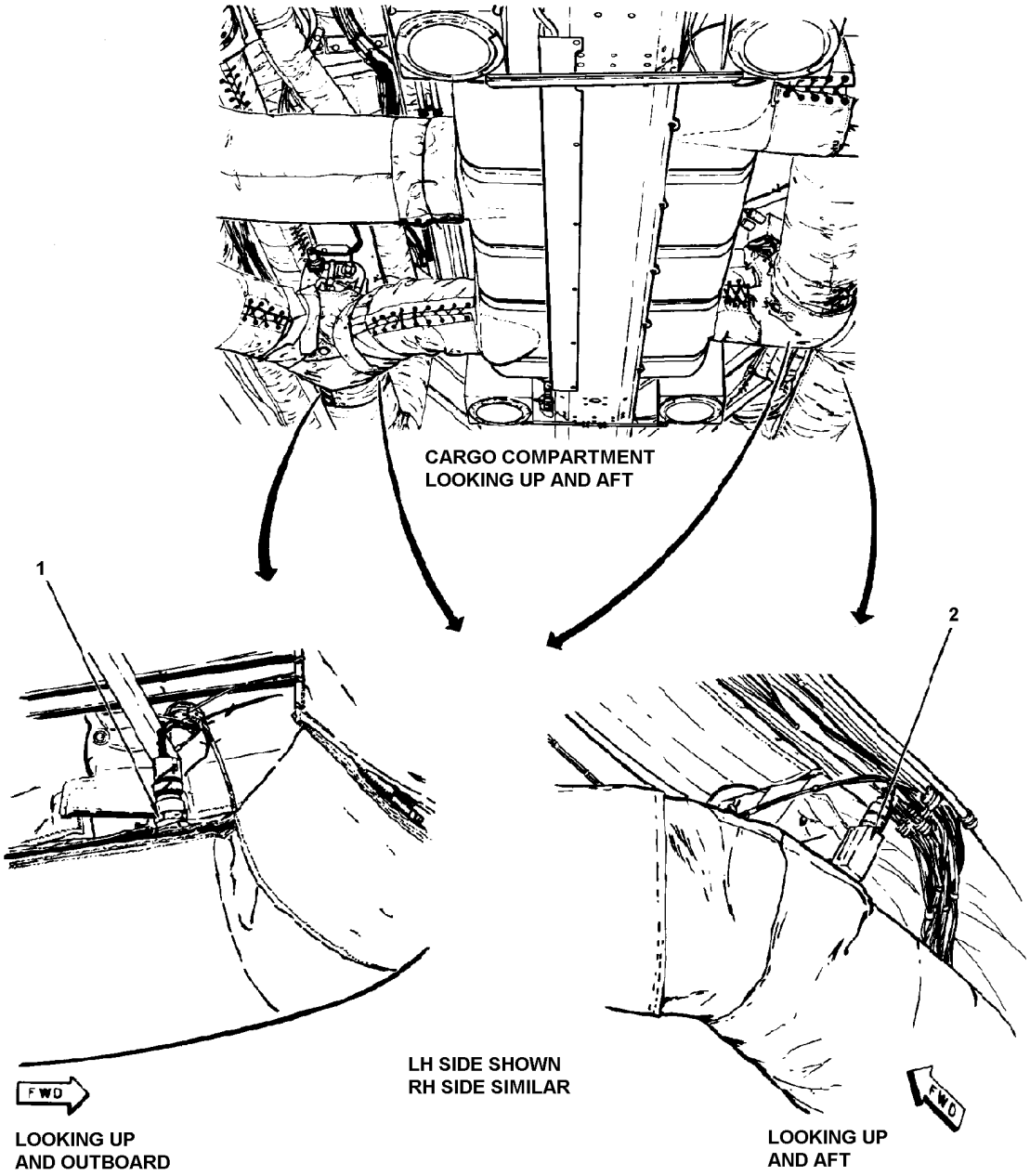

1. FLIGHT STATION OR CARGO COMPARTMENT ANTICIPATOR SENSOR
2. FLIGHT STATION OR CARGO COMPARTMENT HIGH-LIMIT SENSOR
3. CARGO COMPARTMENT TEMPERATURE CONTROL BOX
4. FLIGHT STATION TEMPERATURE CONTROL BOX

Temperature Control Boxes and Duct Sensors (Sheet 1 of 2)

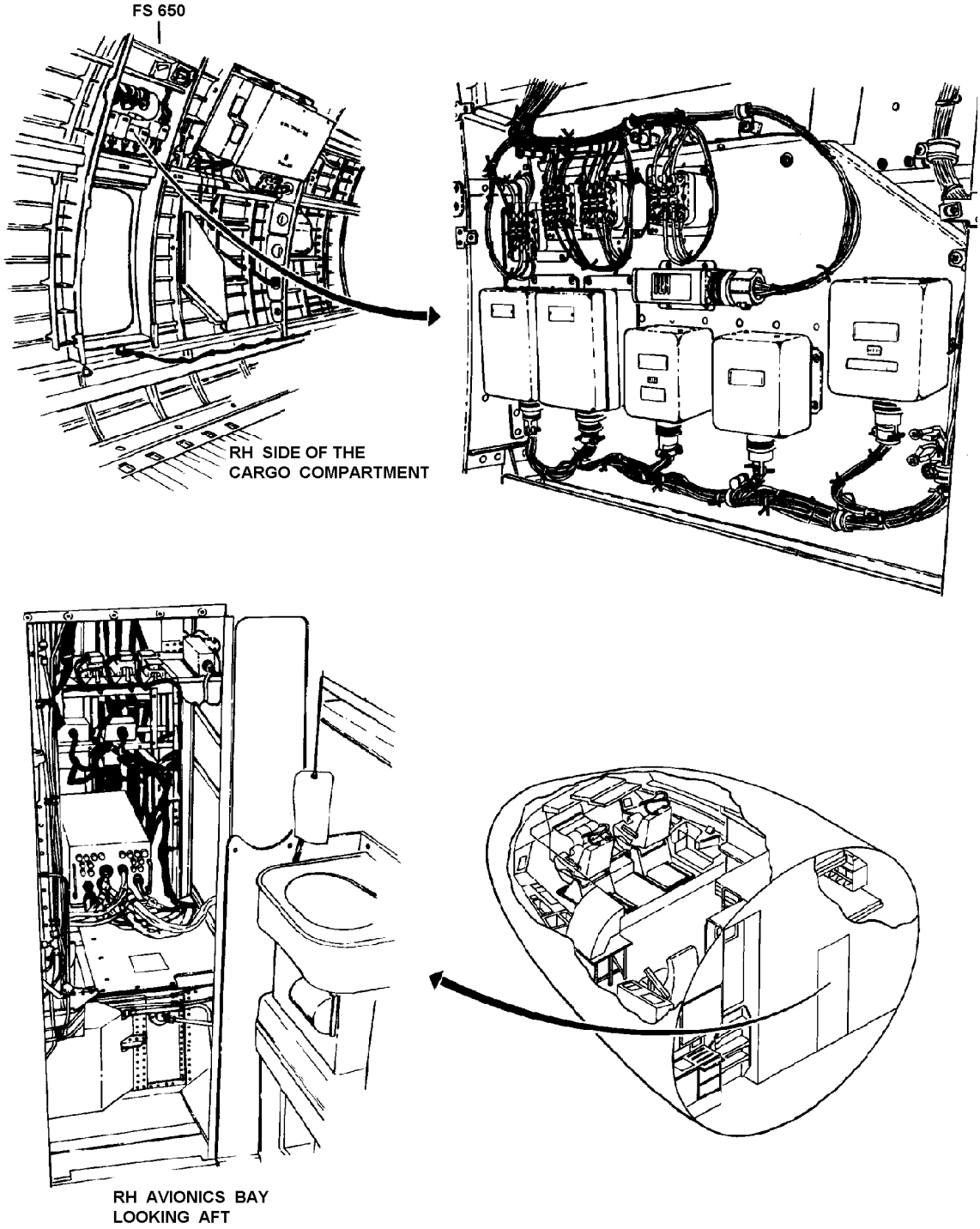

Temperature Control Boxes and Duct Sensors (Sheet 2 of 2)

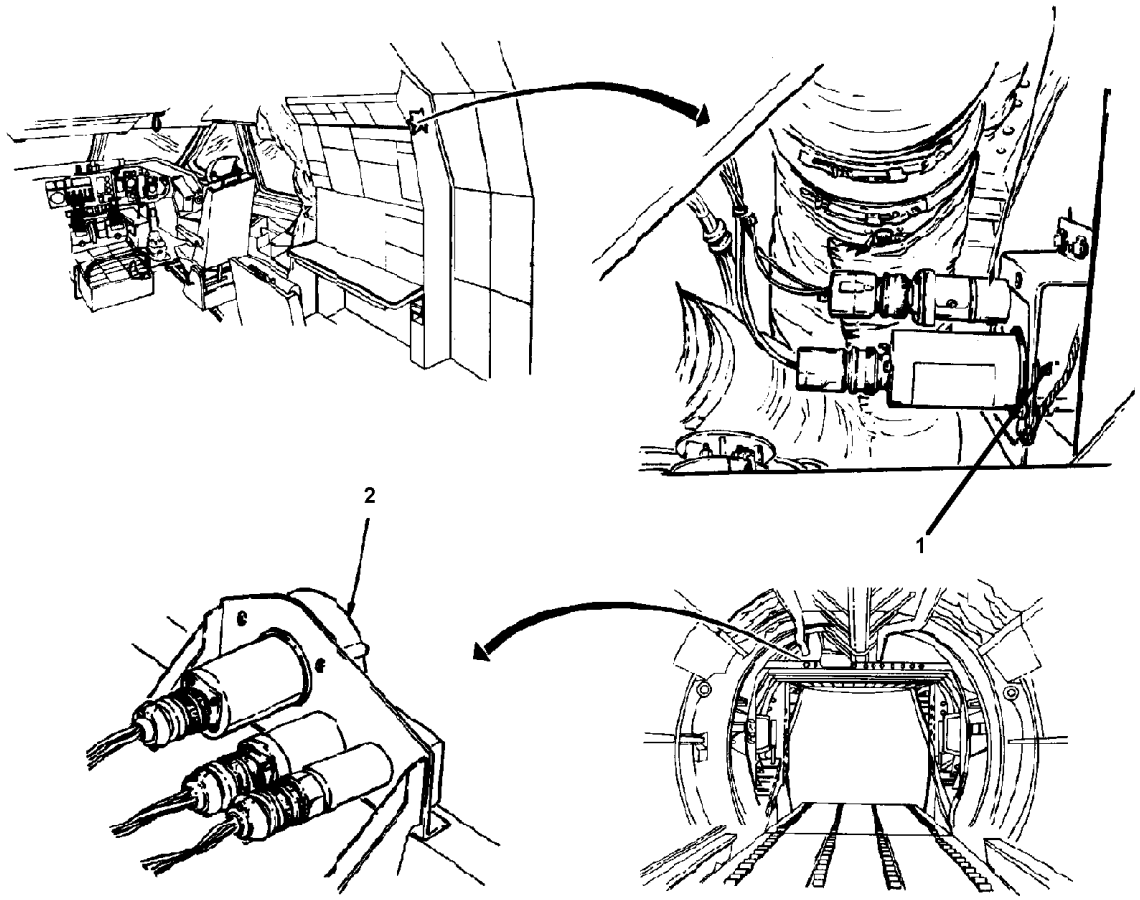

1. FLIGHT STATION TEMPERATURE SENSOR
2. CARGO COMPARTMENT TEMPERATURE SENSOR

Flight Station and Cargo Compartment Temperature Sensors

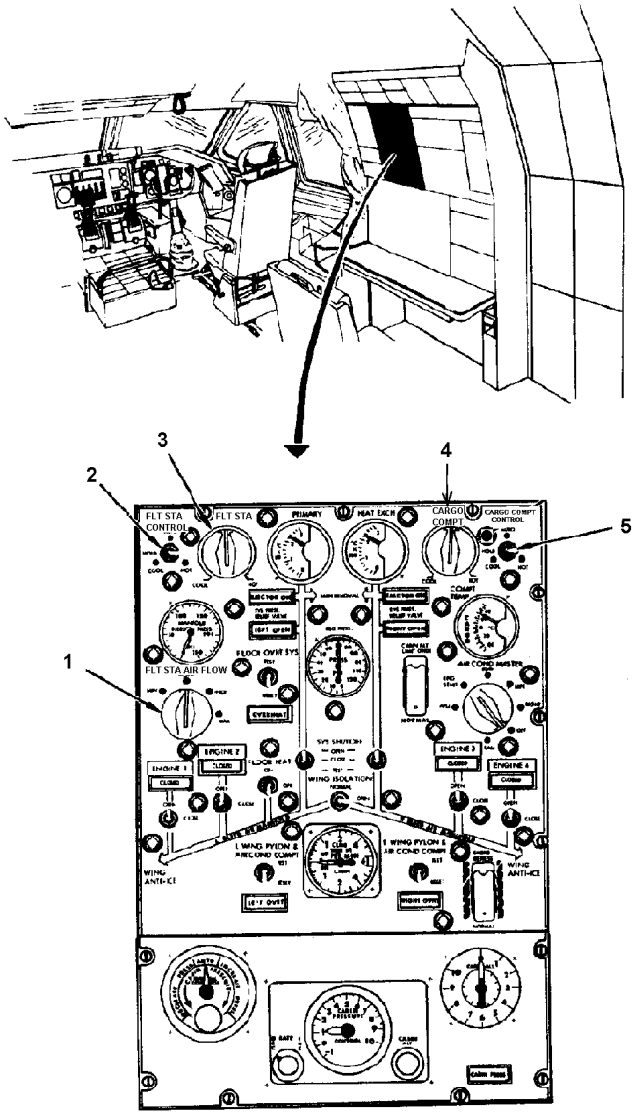

1. FLT STA AIR FLOW SWITCH
2. FLT STA CONTROL SWITCH
3. FLT STA TEMPERATURE CONTROL RHEOSTAT
4. CARGO COMPT TEMPERATURE CONTROL RHEOSTAT
5. CARGO COMPT CONTROL SWITCH

Temperature & Airflow Control Switches and Control Rheostats

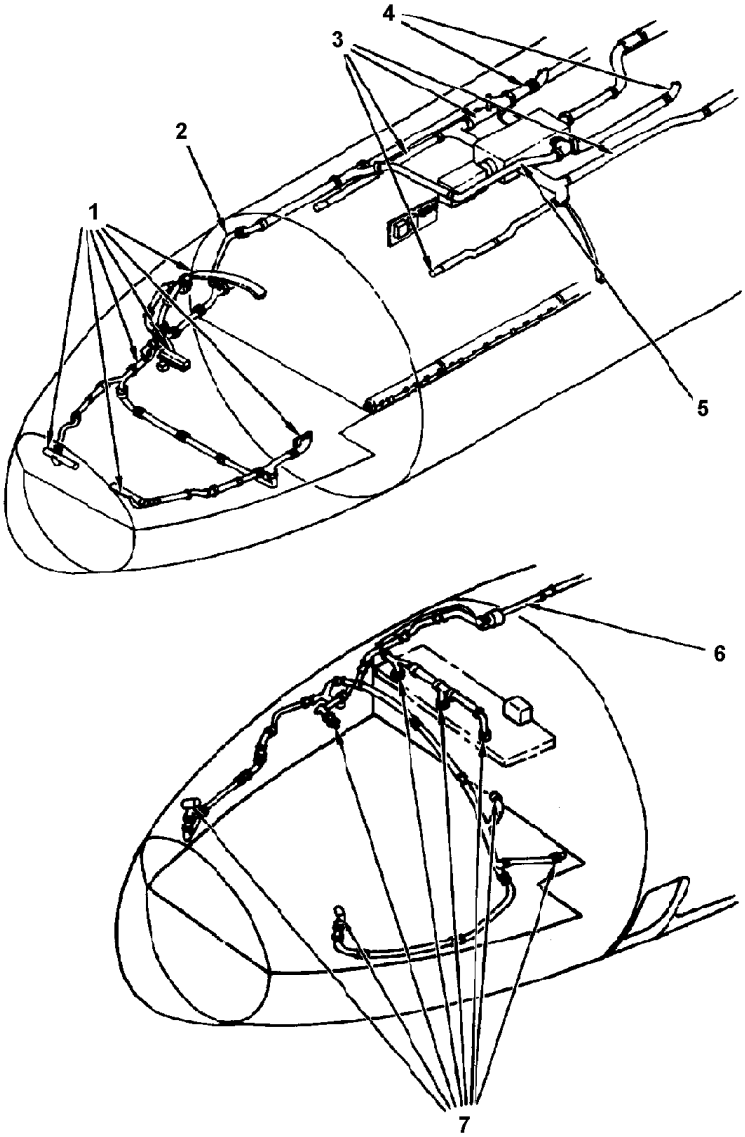

1. FLIGHT STATION OUTLETS
2. FLIGHT STATION SUPPLY DUCTS
3. CARGO COMPARTMENT OUTLETS
4. CHECK VALVES
5. MIXING PLENUM
6. GASPER SUPPLY DUCT
7. FLIGHT STATION GASPERS

Distribution Ducts

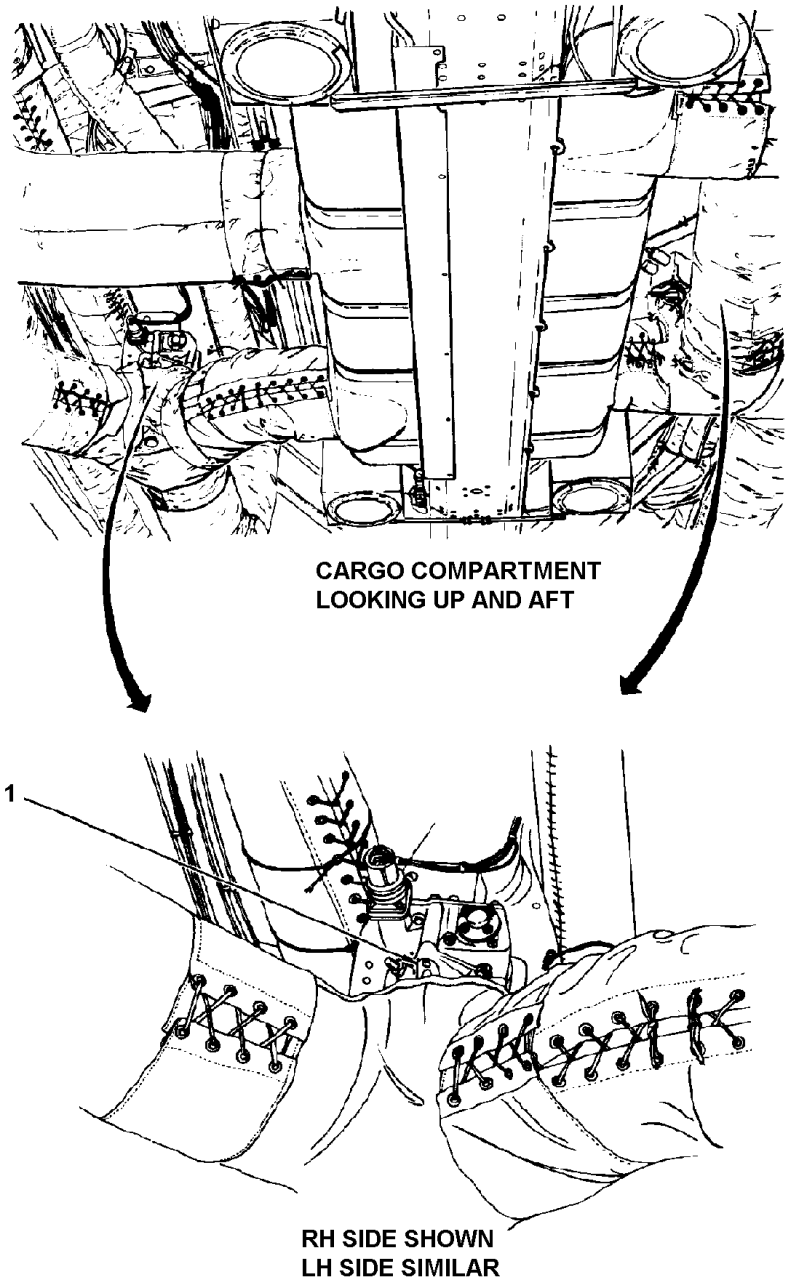

1. ALTERNATE AIR SHUTOFF VALVE
(DIVERTER VALVE SIMILAR)

Alternate Air Shutoff Valve

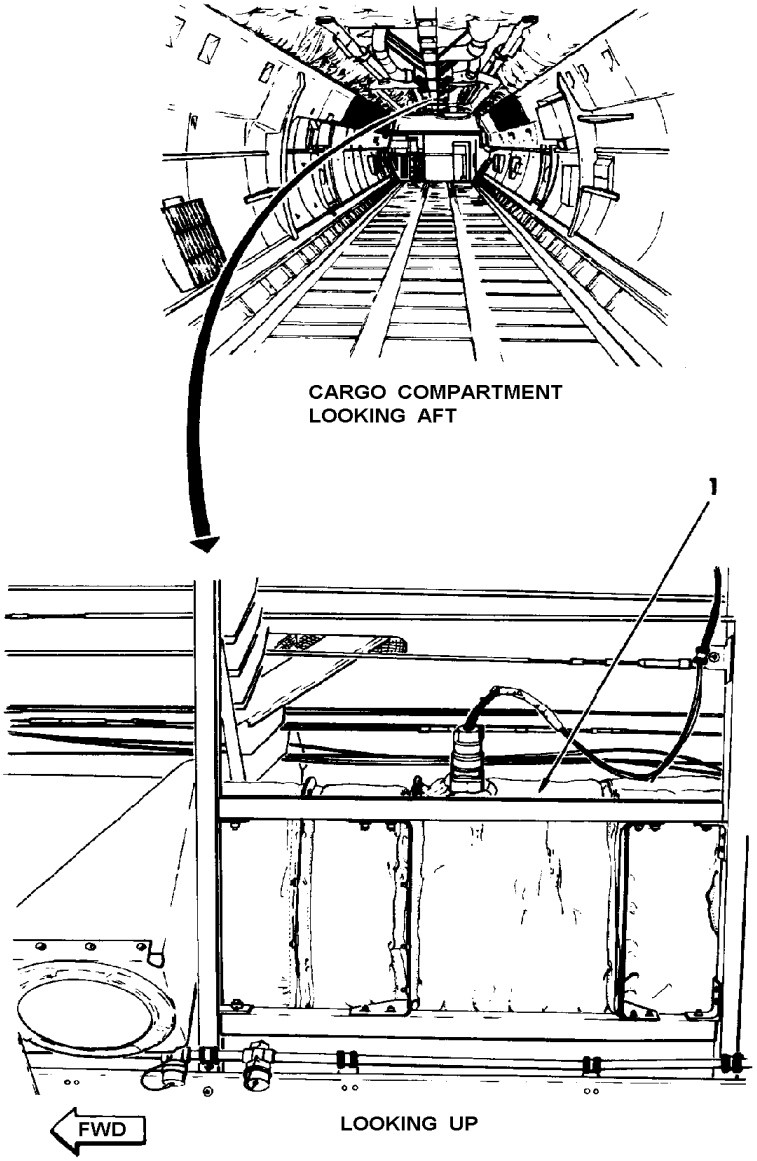

1. CARGO COMPARTMENT RECIRCULATING AIR FAN

Cargo Compartment Recirculating Air Fan

AUTOMATIC FLIGHT CONTROL SYSTEM (AFCS)

General Description

The AFCS includes the autopilot (A/P) and yaw damper (Y/D) system, automatic throttle system (ATS), and the all weather landing system (AWLS).

The AFCS provides a means for automatically controlling the airplane in normal flight. AFCS also automatically guides the airplane to runways for landings. Smooth control is produced by signals that are proportional to displacement and rate of displacement from references in the roll, pitch, and yaw axes. Coordinated turns (no slipping or skidding) are made in all modes of autopilot (A/P) operation. A control wheel steering (CWS) feature allows the pilot to make small changes in roll and pitch attitudes by means of the pilot's control wheel. The AFCS includes a yaw damper (Y/D) system which is used independently of the autopilot portion of the AFCS. The Y/D system is a full time system which supplies yaw stability augmentation as a function of yaw rate. This system also provides turn coordination.

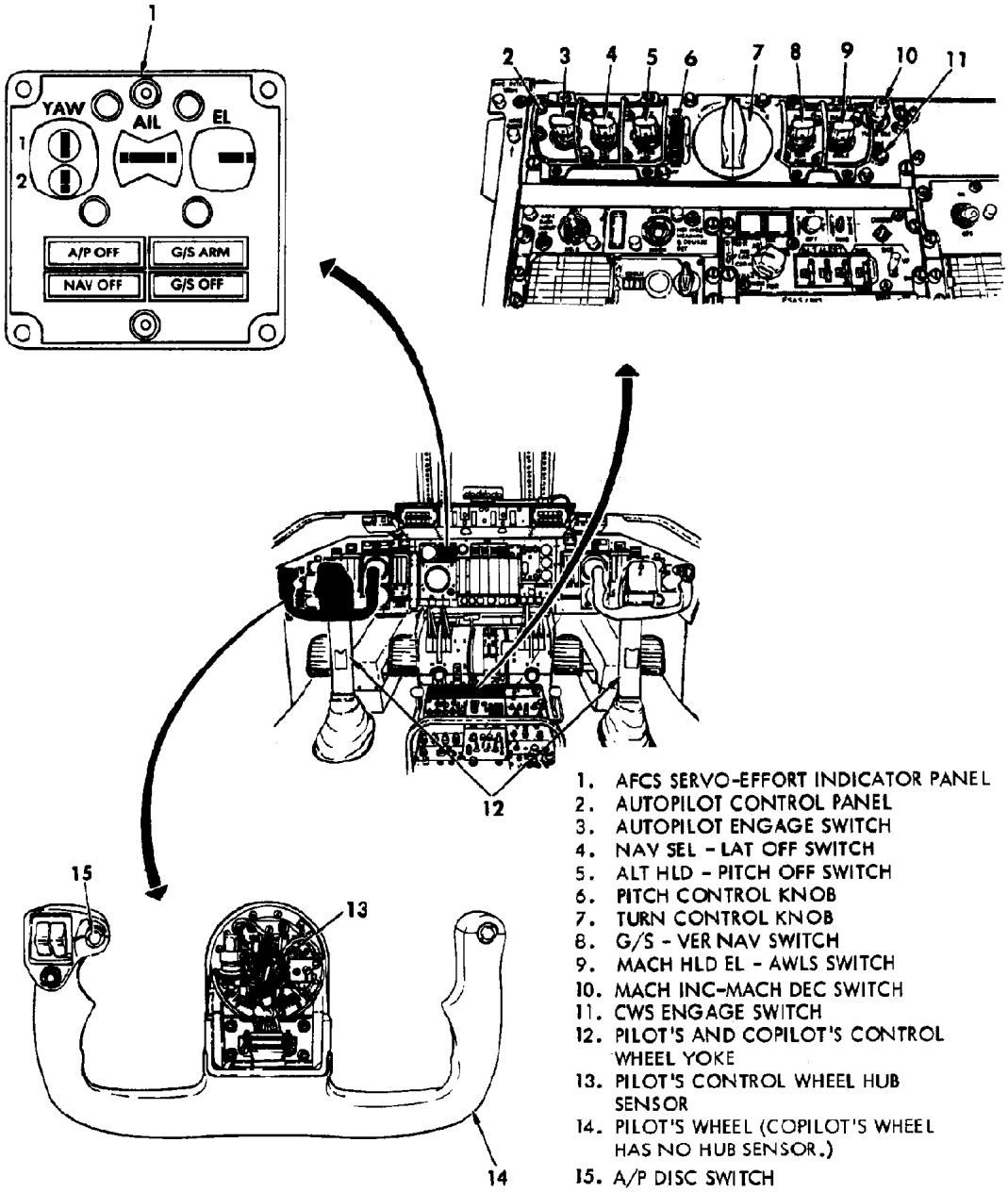

1. AFCS SERVO-EFFORT INDICATOR PANEL
2. AUTOPILOT CONTROL PANEL
3. AUTOPILOT ENGAGE SWITCH
4. NAV SEL - LAT OFF SWITCH
5. ALT HLD - PITCH OFF SWITCH
6. PITCH CONTROL KNOB
7. TURN CONTROL KNOB
8. G/S - VER NAV SWITCH
9. MACH HLD EL - AWLS SWITCH
10. MACH INC-MACH DEC SWITCH
11. CWS ENGAGE SWITCH
12. PILOT'S AND COPILOT'S CONTROL WHEEL YOKE
13. PILOT'S CONTROL WHEEL HUB SENSOR
14. PILOT'S WHEEL (COPILOT'S WHEEL HAS NO HUB SENSOR.)
15. A/P DISC SWITCH

Autopilot (A/P) Controls

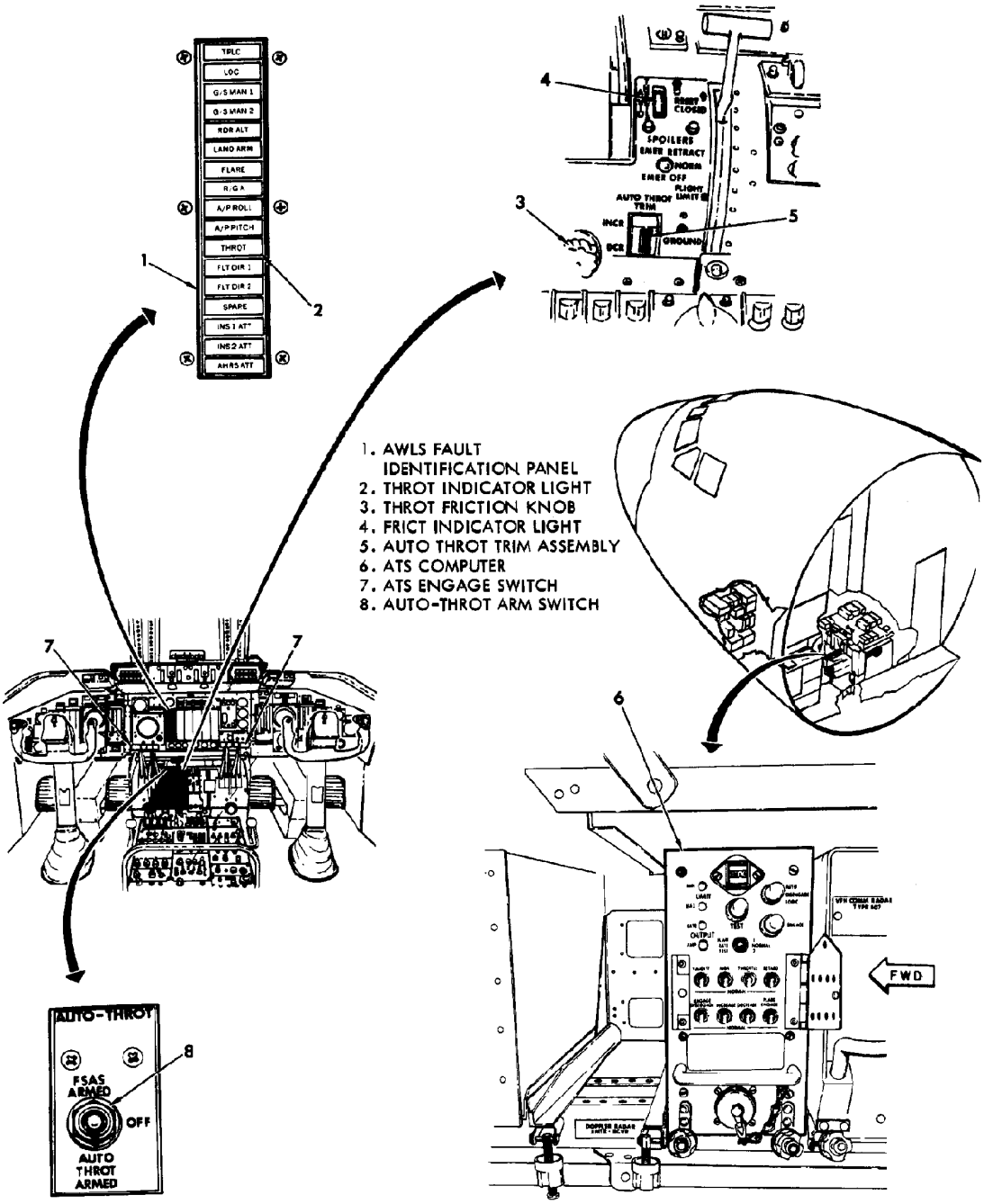

Automatic Throttle System (ATS) Components

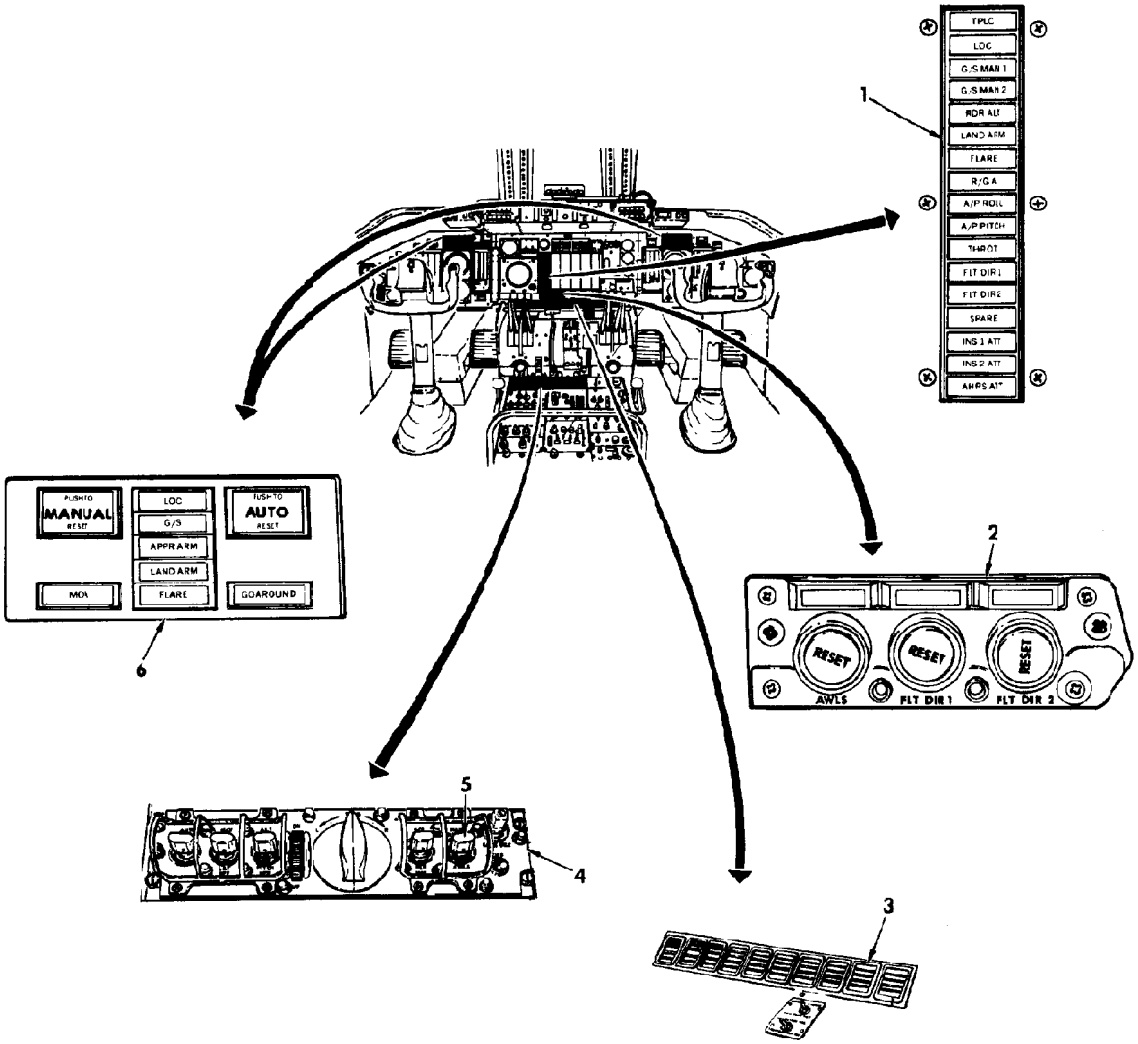

1. AWLS FAULT IDENTIFICATION PANEL
2. AWLS AND FLIGHT DIRECTOR TEST PANEL
3. ANNUNCIATOR AND CAUTION LIGHT TEST PANEL
4. AUTOPILOT CONTROL PANEL
5. MACH HLD EL-AWLS SWITCH
6. FLIGHT PROGRESS DISPLAY AND AWLS CAUTION PANEL

All Weather Landing System (AWLS) Controls

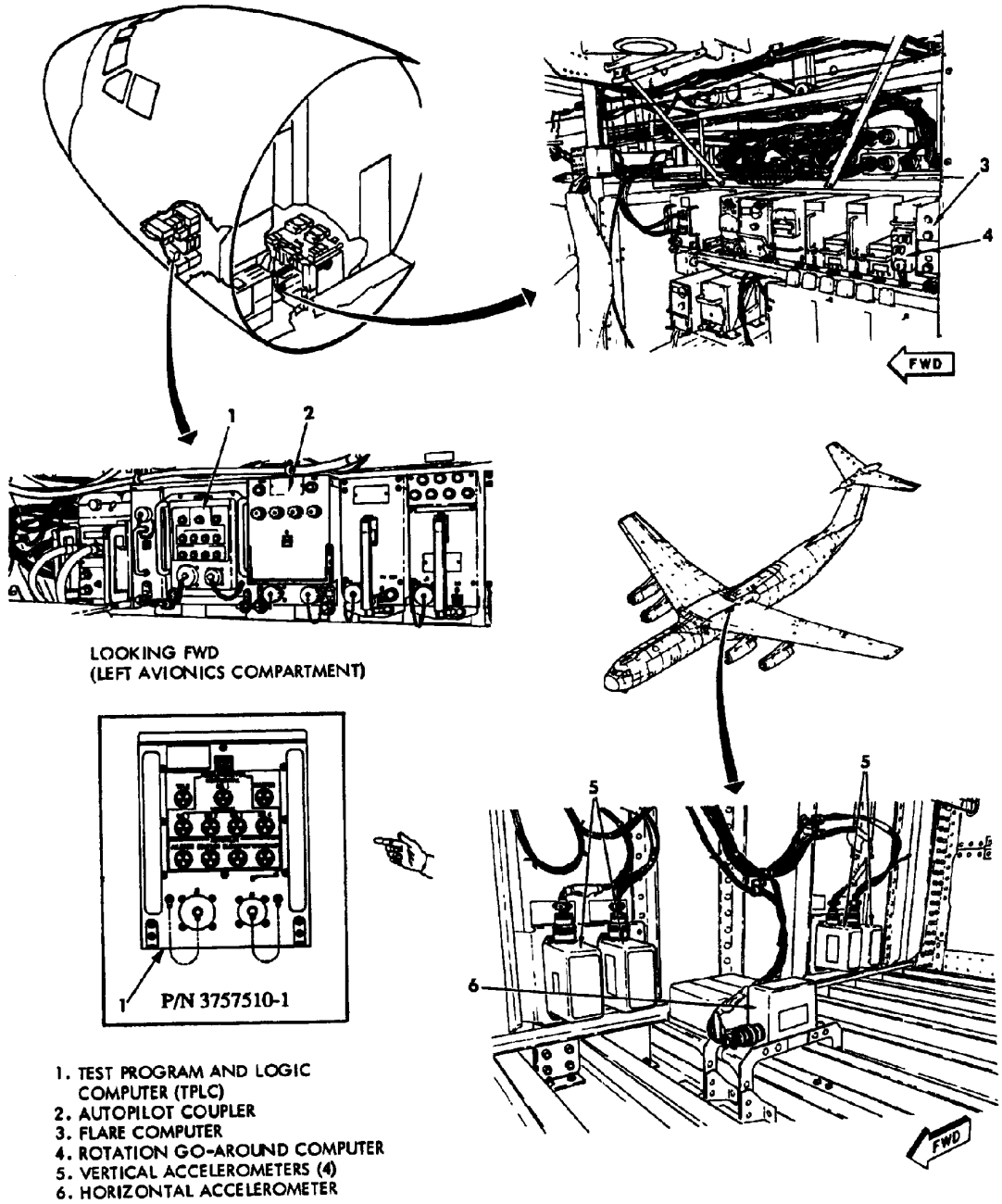

All Weather Landing System (AWLS) Components

Autopilot (A/P) and Yaw Damper (Y/D) System

The A/P provides automatic control of the aileron and elevator axes and also controls the rudder with the Y/D servo actuators for coordinated turns. Automatic control of the roll axis can be turned off (LAT OFF) while the A/P controls the rudder and elevator axes. Automatic control of the pitch axis can be turned off (PITCH OFF) while the A/P controls the rudder and aileron axes. The A/P can maintain a selected pressure altitude or Mach number within the limits of the control ranges. The A/P can also maintain selected navigational bearings by using information supplied by LOC/VOR, TACAN, AHRS, dead-reckoning, and compass systems. The A/P can be engaged to fly a flight profile as computed by the FSAS utilizing the VER NAV (Vertical Navigation) mode. A/P control is coordinated in all operating modes, if the roll and yaw axes are engaged so that airplane turns are made without slipping, skidding, or loss of altitude.

The Y/D portion of the AFCS can be engaged independently of the A/P. Y/D is normally engaged at all times in flight. The Y/D system provides compensating rudder movement, in relation to the rate of yaw, to damp out inherent dutch roll tendencies that occur when airplane direction is altered. The Y/D system is electrically isolated from the A/P portion of the AFCS.

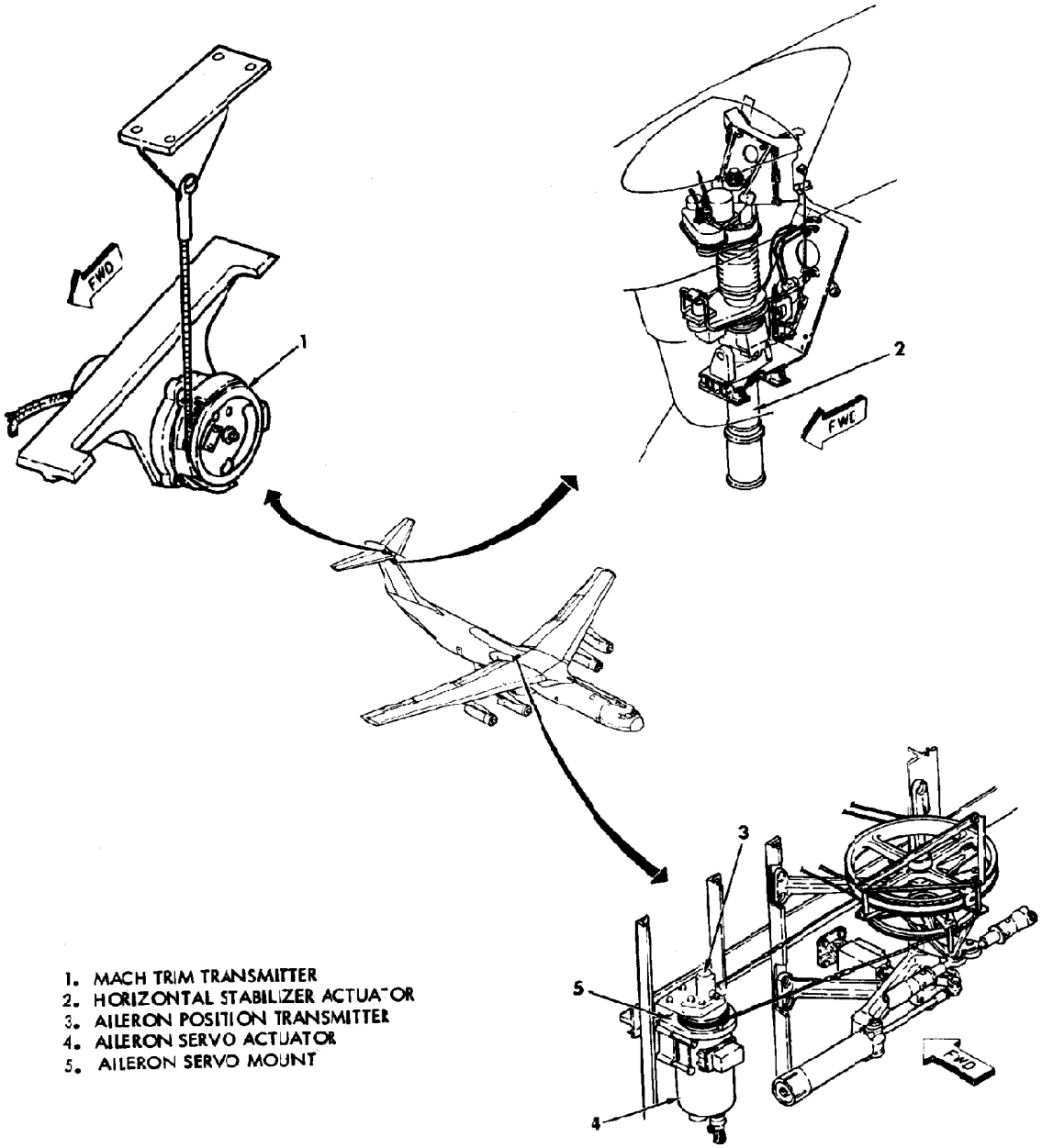

Autopilot (A/P), Yaw Damper (Y/D), and Associated Component Locations
(Sheet 1 of 5)

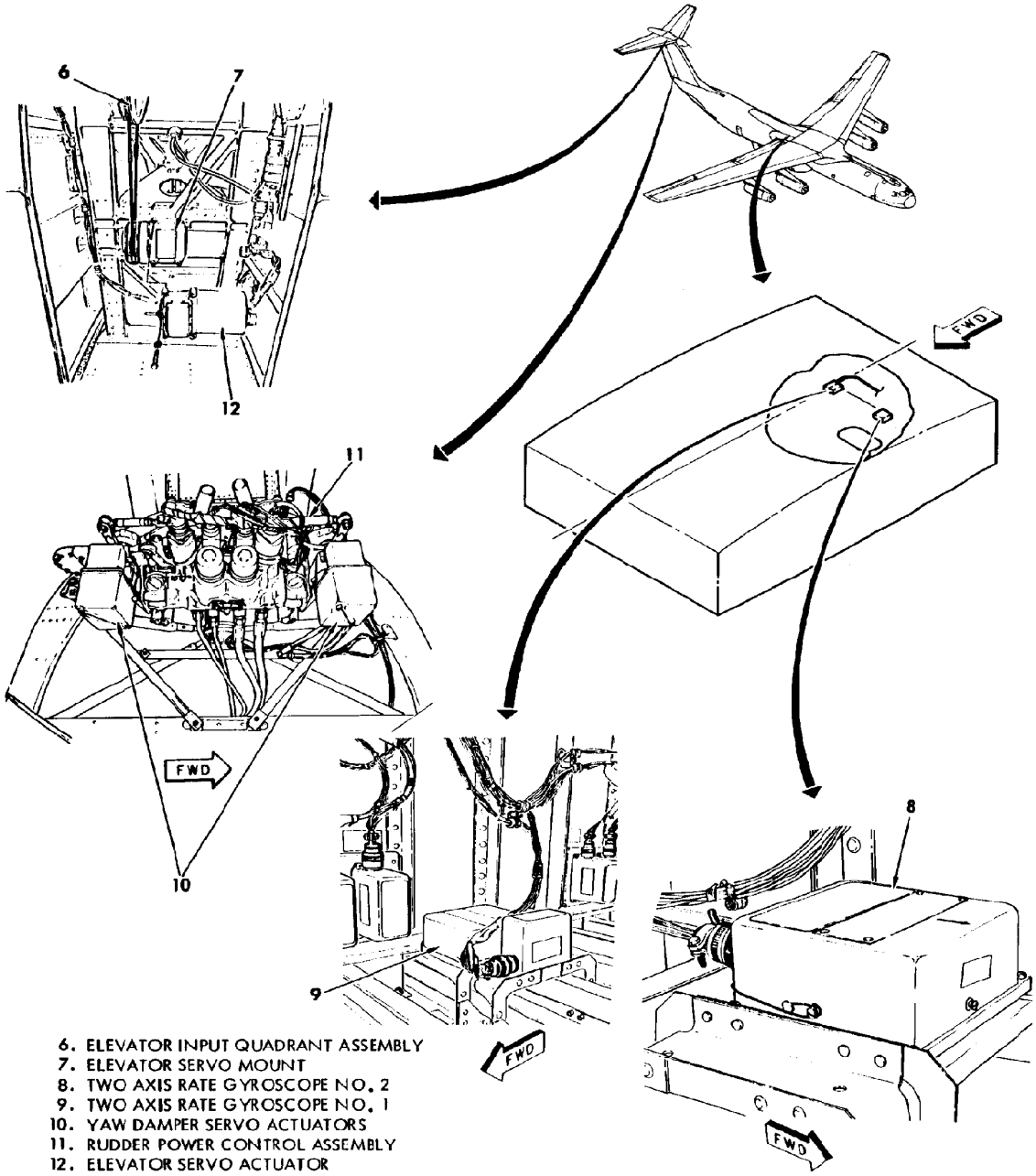

Autopilot (A/P), Yaw Damper (Y/D), and Associated Component Locations
(Sheet 2 of 5)

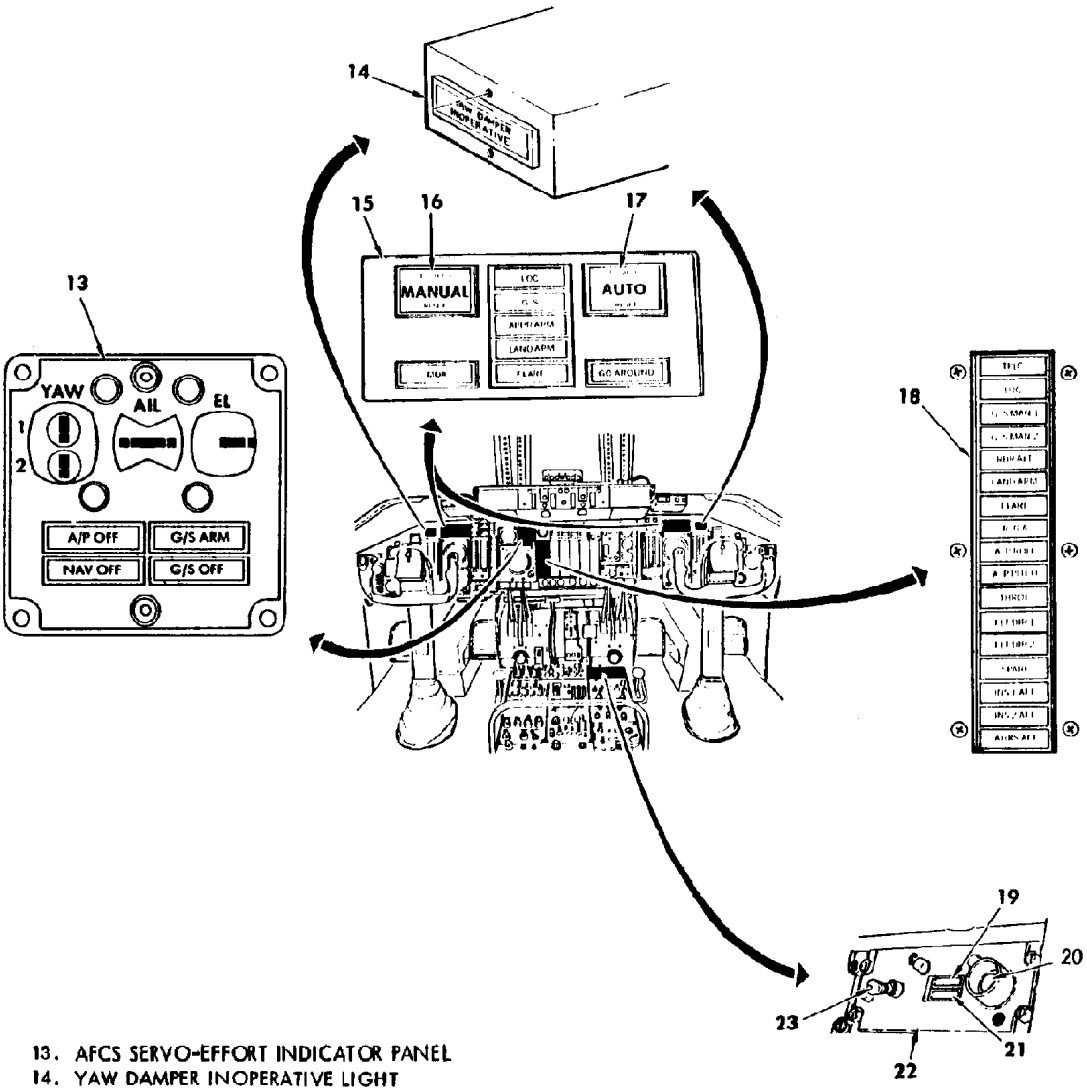

13. AFCS SERVO-EFFORT INDICATOR PANEL
14. YAW DAMPER INOPERATIVE LIGHT
15. AWLS FLIGHT PROGRESS DISPLAY AND AWLS CAUTION PANEL
16. MANUAL CAUTION LIGHT, AWLS
17. AUTO CAUTION LIGHT, AWLS
18. AWLS FAULT IDENTIFICATION PANEL
19. MONITOR TEST LIGHT
20. YAW DAMPER TEST SWITCH
21. YAW DAMPER CHECK/RESET LIGHT
22. YAW DAMPER CONTROL PANEL
23. YAW DAMPER ENGAGE SWITCH

Autopilot (A/P), Yaw Damper (Y/D), and Associated Component Locations
(Sheet 3 of 5)

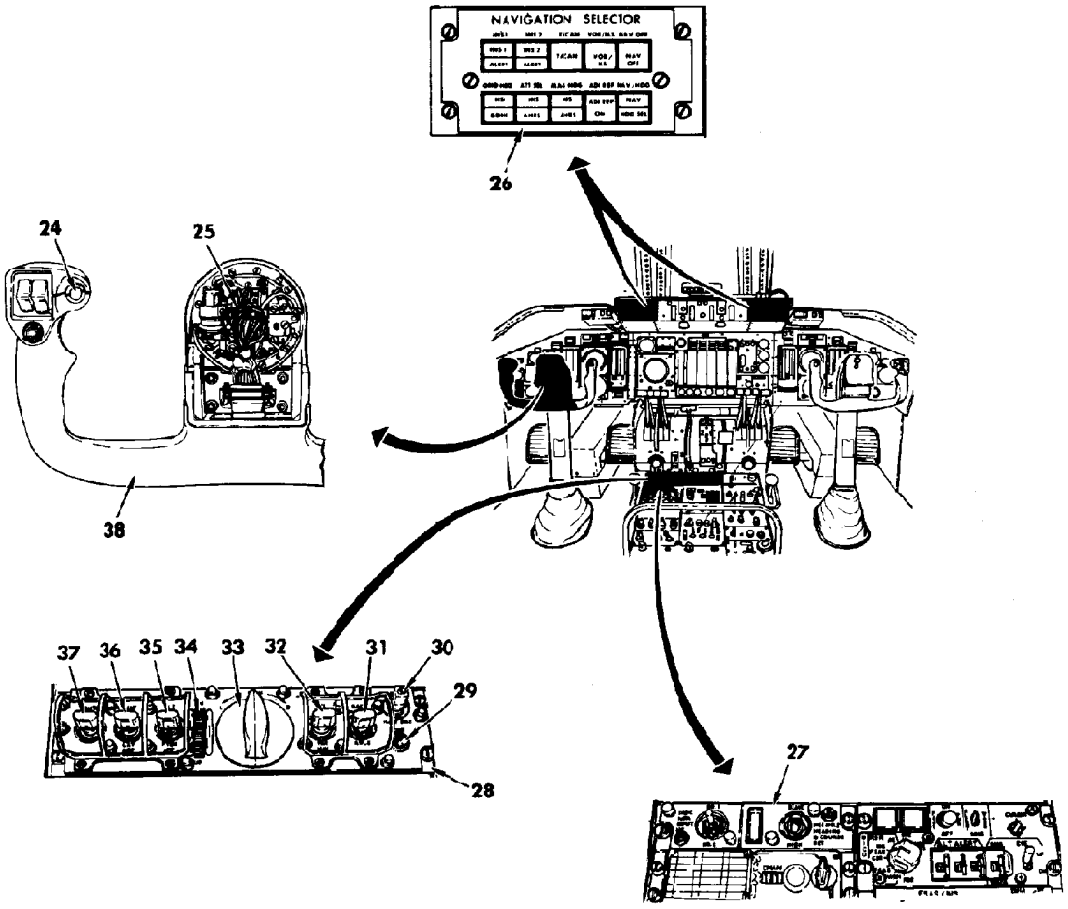

24. AUTOPILOT DISCONNECT SWITCH (ALSO ON COPILOT'S)
25. PILOT'S CONTROL WHEEL HUB SENSOR (COPILOT'S HAS NO HUB SENSOR)
26. NAVIGATION SELECTOR PANEL
27. HSI NO.2 HEADING & COURSE SET PANEL
28. AUTOPILOT CONTROL PANEL
29. CWS ENGAGE SWITCH
30. MACH INC-MACH DEC SWITCH
31. MACH HLD EL-AWLS SWITCH
32. G/S-VER NAV SWITCH
33. TURN CONTROL KNOB
34. PITCH CONTROL KNOB
35. ALT HLD-PITCH OFF SWITCH
36. NAV SEL-LAT OFF SWITCH
37. AUTOPILOT ENGAGE SWITCH
38. PILOT'S CONTROL WHEEL

Autopilot (A/P), Yaw Damper (Y/D), and Associated Component Locations
(Sheet 4 of 5)

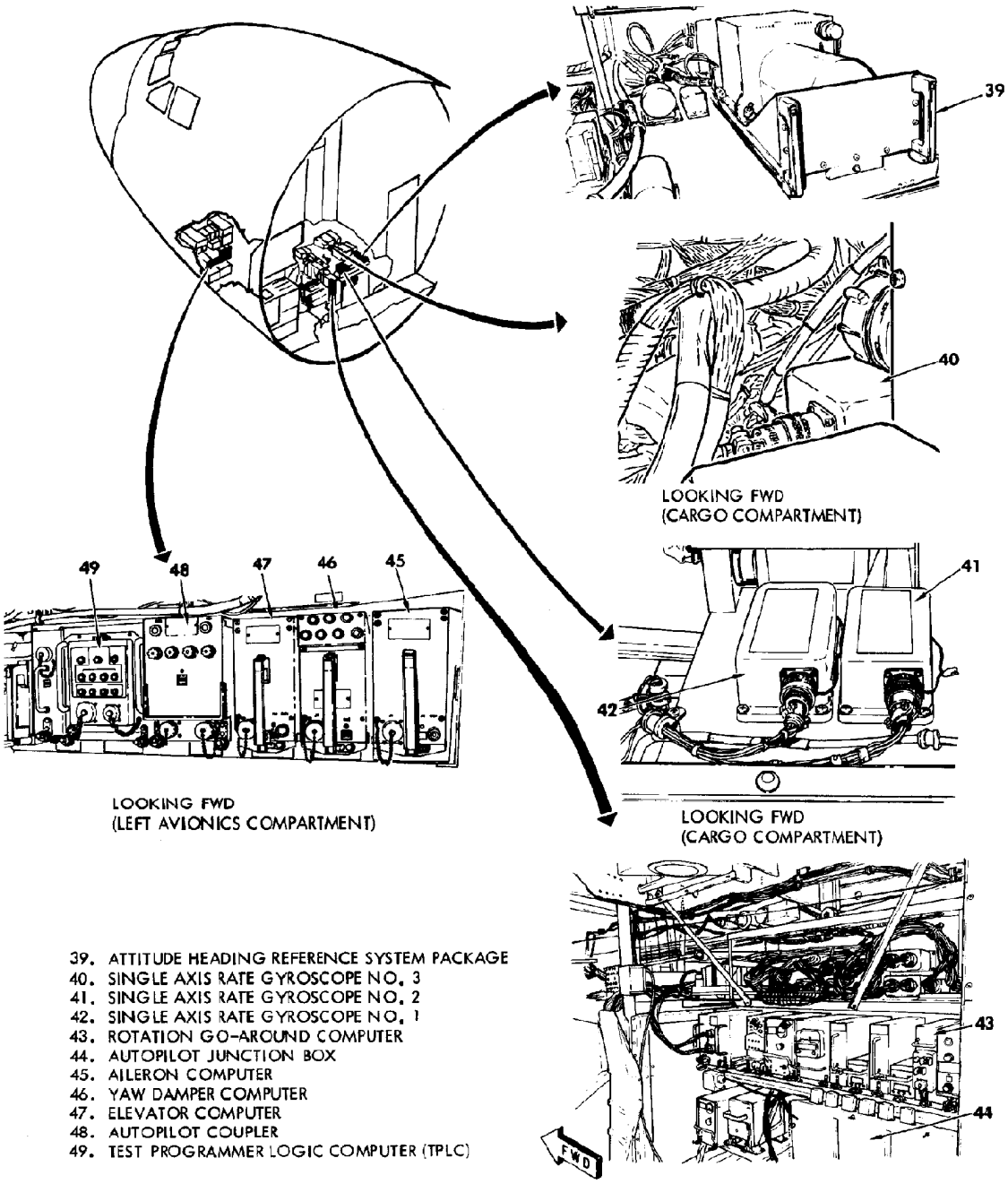

Autopilot (A/P), Yaw Damper (Y/D), and Associated Component Locations
(Sheet 5 of 5)

Automatic Throttle System (ATS)

An ATS is provided to maintain and hold the airspeed existing at the time the system is engaged. This system is used primarily to control the airspeed during the approach, flare, and touchdown. The pilots can manually override any throttle lever, or all four throttle levers with a force of approximately 60 pounds.

NOTE: The ATS is inoperative when the aerial refuel master switch is ON.

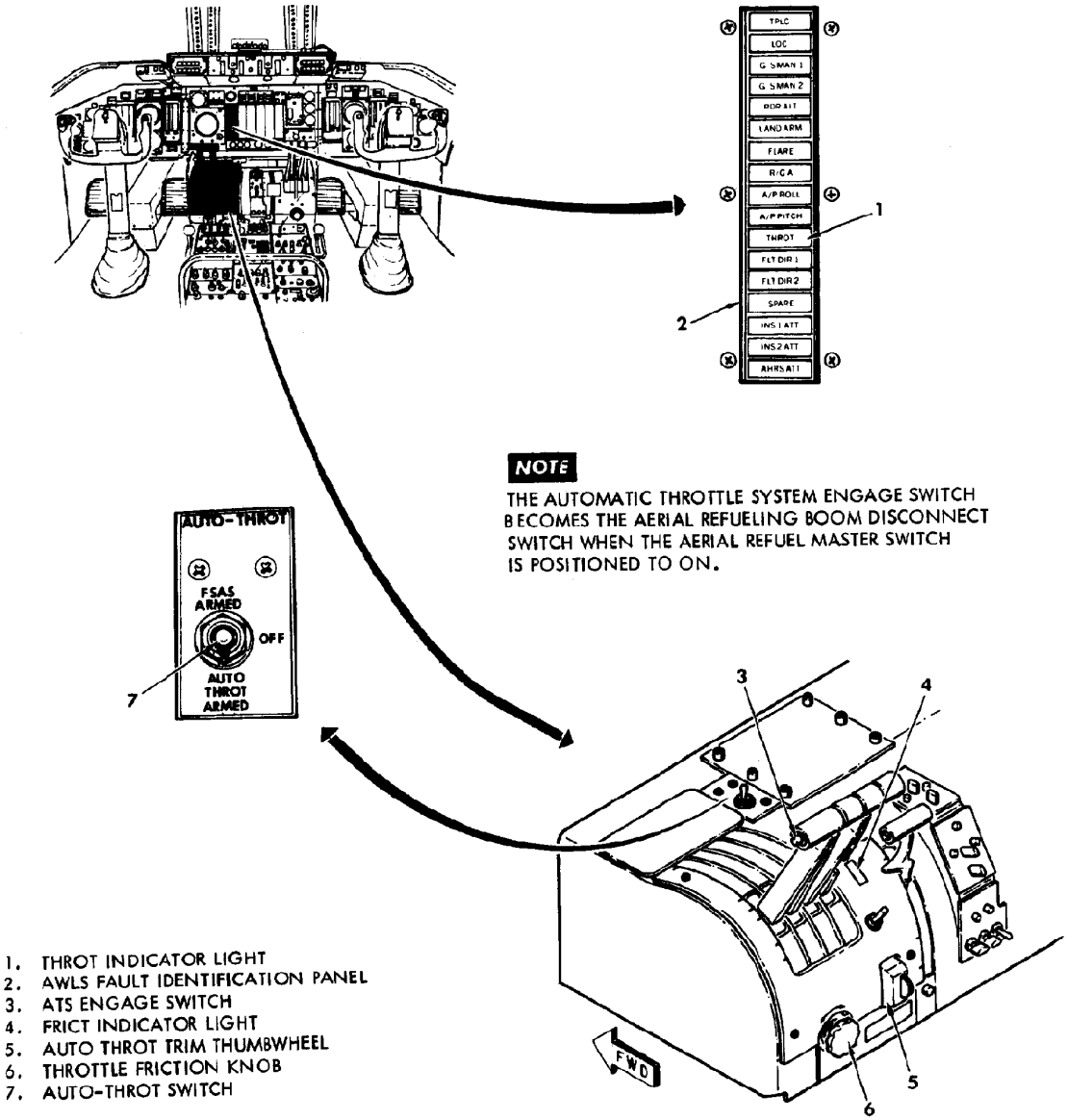

Automatic Throttle System (ATS) and Associated Component Locations
(Sheet 1 of 3)

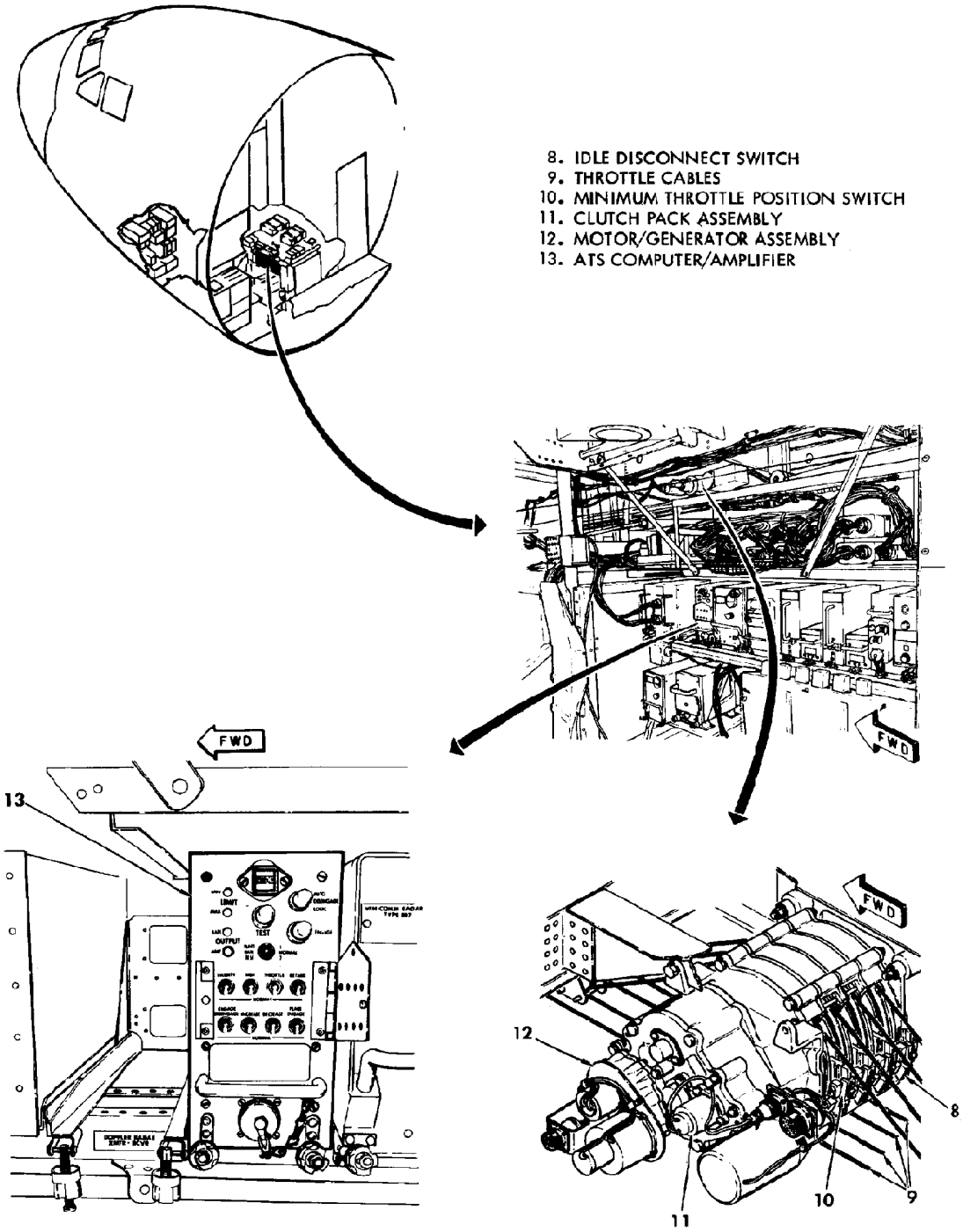

Automatic Throttle System (ATS) and Associated Component Locations
(Sheet 2 of 3)

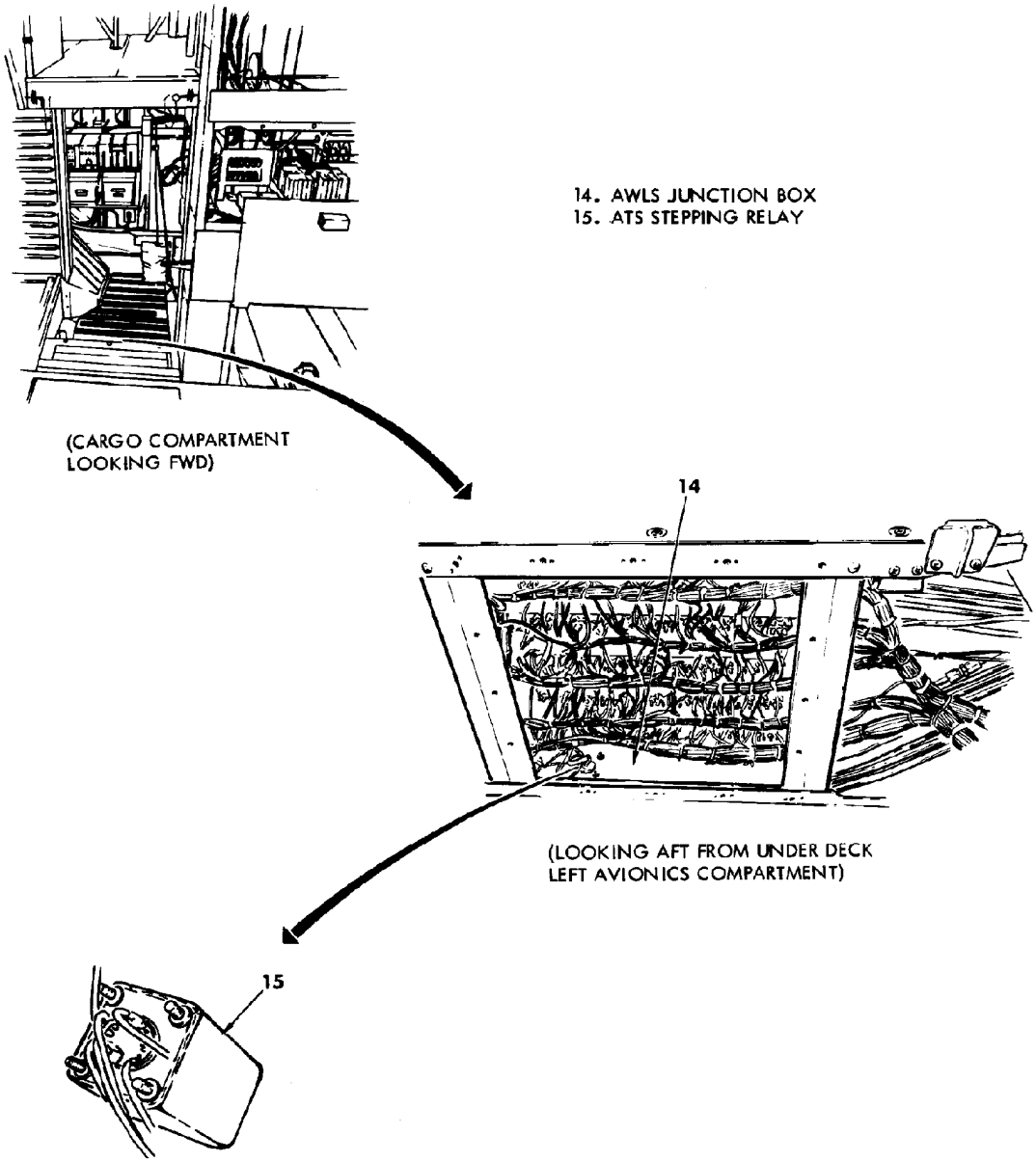

Automatic Throttle System (ATS) and Associated Component Locations
(Sheet 3 of 3)

All Weather Landing System (AWLS)

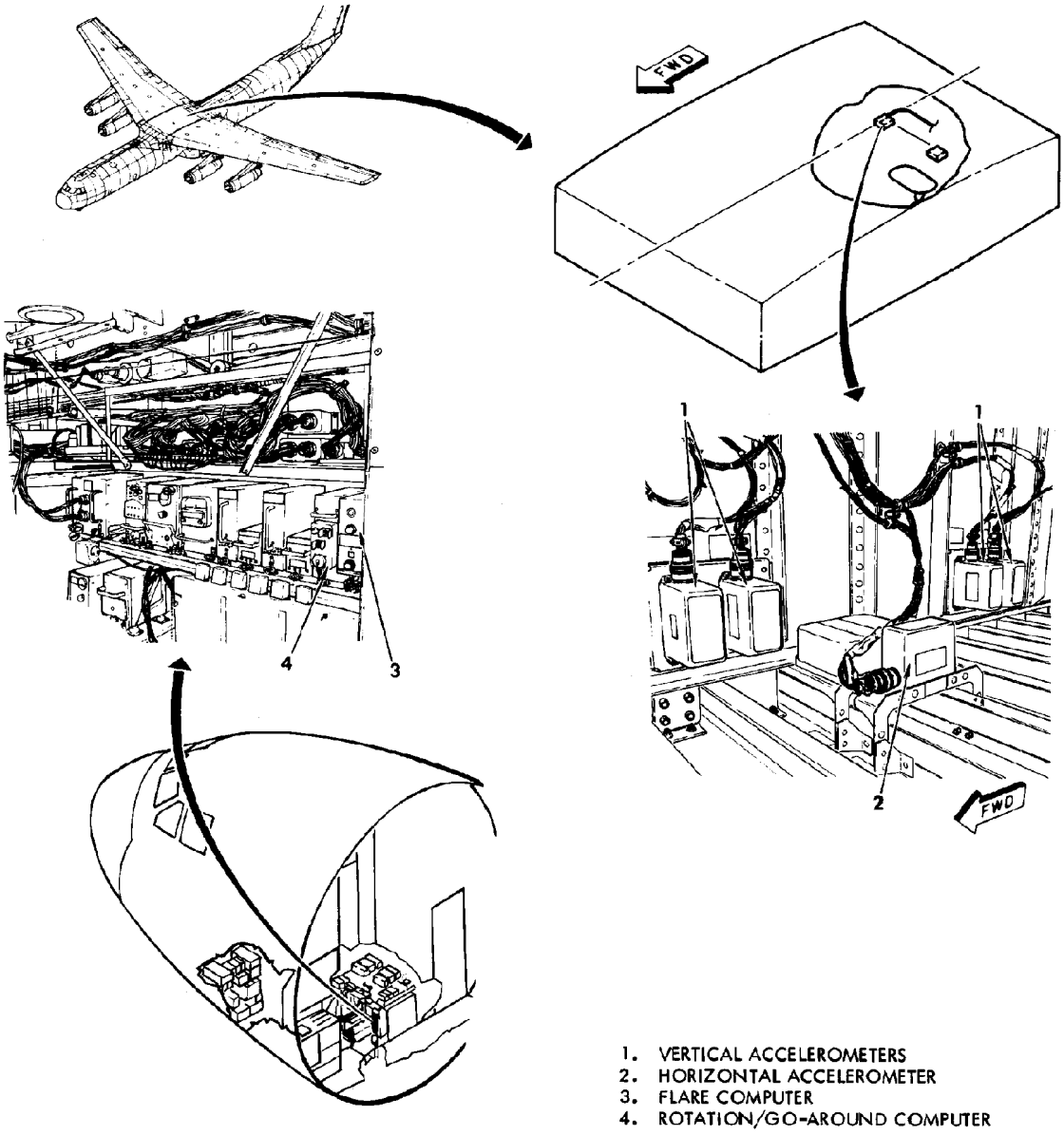

All Weather Landing System (AWLS) and Associated Component Locations
(Sheet 1 of 4)

The AWLS provides either automatic control or guidance for manual control of the airplane during normal landing approaches. The system is used in any weather

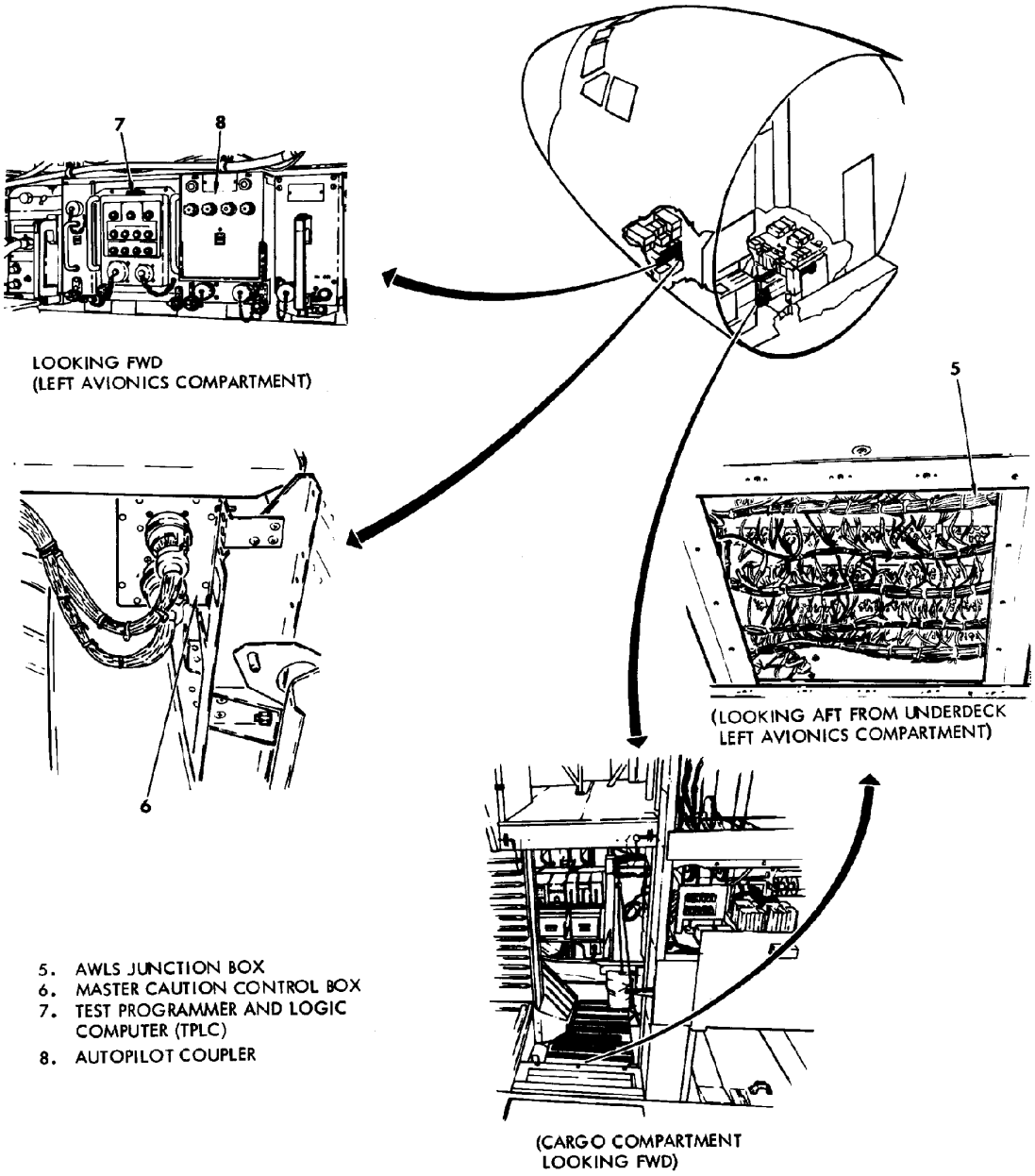

All Weather Landing System (AWLS) and Associated Component Locations
(Sheet 2 of 4)

conditions down to a minimum decision altitude (MDA) of 100 feet. If the landing field is in sight at the MDA, the AWLS continues to provide either automatic control or

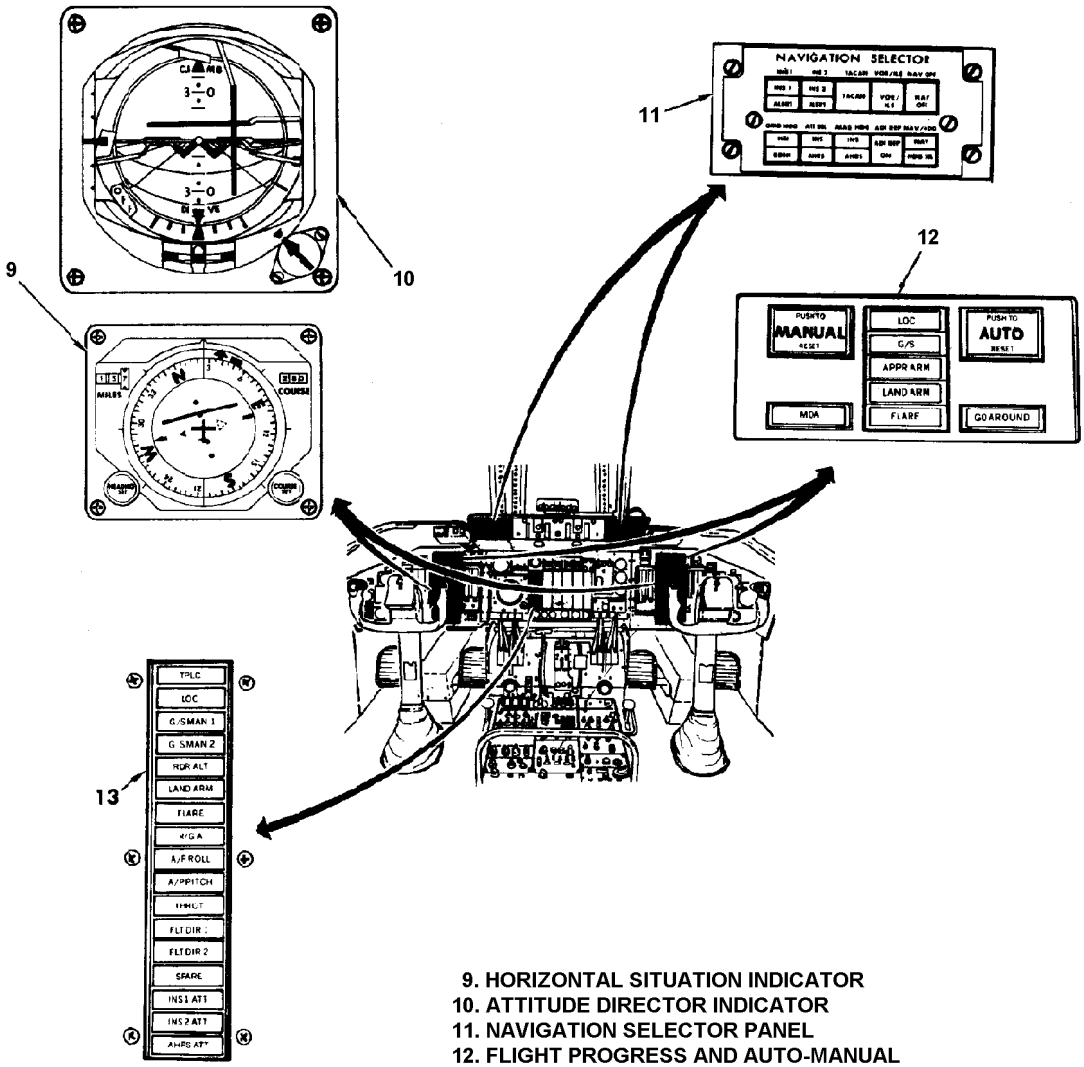

9. HORIZONTAL SITUATION INDICATOR
10. ATTITUDE DIRECTOR INDICATOR
11. NAVIGATION SELECTOR PANEL
12. FLIGHT PROGRESS AND AUTO-MANUAL DISPLAY PANEL
13. AWLS FAULT IDENTIFICATION PANEL

All Weather Landing System (AWLS) and Associated Component Locations
(Sheet 3 of 4)

guidance for manual control through the flare and throttle retard maneuvers to an altitude of about 15 feet. At this altitude and time, the pilot manually aligns the airplane

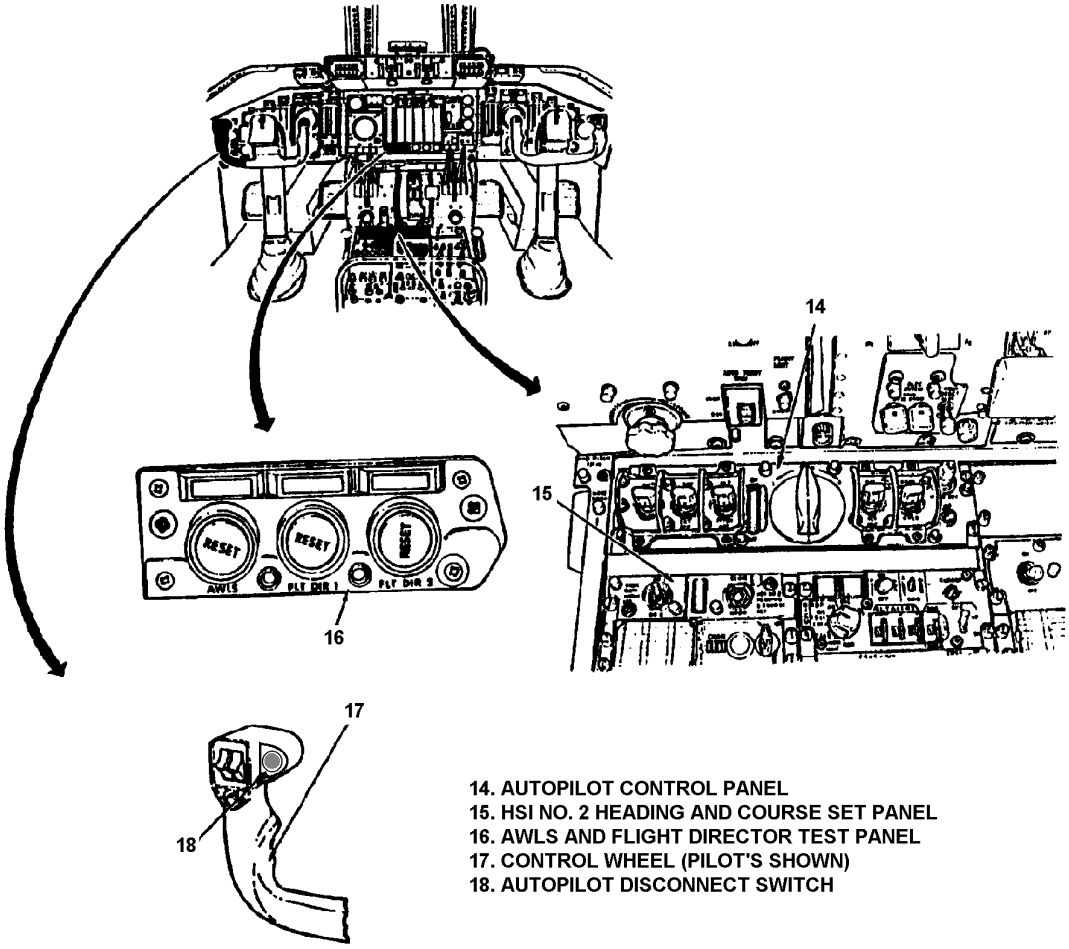

All Weather Landing System (AWLS) and Associated Component Locations
(Sheet 4 of 4)

with the runway (decrabs the airplane) and manually controls it during touchdown and landing roll. If the landing field is not in view at the MDA of 100 feet, a missed landing maneuver can be initiated by pressing the GO- AROUND switch on either control wheel and advancing the throttles. In go-around, the rotation/go- around (R/GA) computer provides pitch steering guidance on both attitude director indicators (ADIs) as the pilots control the airplane manually. The R/GA mode may also be used for pitch steering guidance during manual takeoffs. The automatic flight control system provides control of the flight control surfaces for automatic AWLS landings. The flight director system (FDS) supplies visual guidance as the pilots control the flight control surfaces for manual AWLS landings. Other airplane components and systems that contribute to the AWLS landings are angle-of-attack transmitters of the stall prevention system, wing flap position transmitters, localizer and glideslope systems, radar altimeter, central air data computer system, INSs, automatic throttle system, and the primary flight control systems. The AWLS system includes built-in test equipment (BITE) to test the validity of critical channels and functions in flight prior to use and for ground checkout and troubleshooting. An AWLS master caution system provides indication of unreliable or faulty channels or modes detected during inflight testing and of proper performance at critical stages of AWLS landings.

NOTES

COMMUNICATION SYSTEM

General Description

The communication system provides air-to-air, air-to-ground, and intra-airplane communications. Secure voice, multiple radio transmit, and Joint Airborne Communication Center/Command Post (JACC/CP) systems are installed on some airplanes. System and type identification for installed communication equipment follows: HF Comm/HF-102, VHF Comm/ARC-186, UHF Comm/ARC-164, Interphone/ AIC-18A, Public Address/AIC-13, Static Discharging, JACC/CP URC-56, Secure Voice (HF) KY-75/TSEC, Secure Voice (VHF, UHF) KY-58/TSEC.

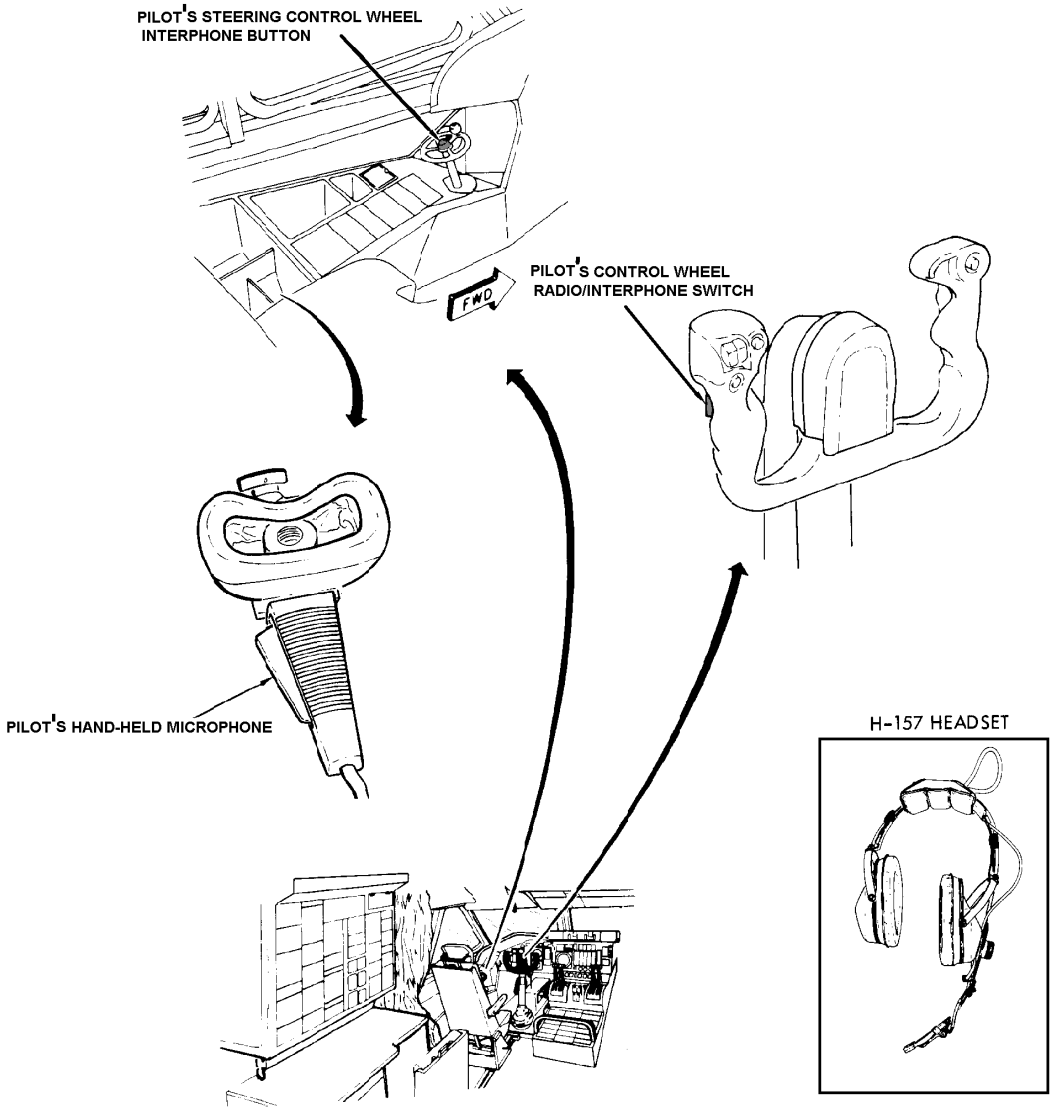

Typical Communication System Components

High Frequency (HF) Systems

No. 1 and No. 2 HF automatic communications systems (ACS) provide long-range, 2-way communications as well as automatic link establishment (ALE), selective calling, and Anti-Jam (AJ) capability. Using channel scanning and selective calling features, the ACS improves HF communications quality, connectivity, and reduces operator tasks required to communicate under varying propagation conditions. The ACS provides normal HF operation in three operational modes: manual, channel, and automatic. Manual mode requires manual frequency and radio mode selection. Manual mode can also be used to make ALE calls once a frequency and mode are manually selected. Channel mode uses an operator selected preset channel for placing a call. The preset channel contains radio mode and frequency presets. Channel mode can also be used to make ALE calls. Automatic (AUT) mode employs ALE, selective scanning, and link quality analysis to make HF communications fully automatic. In the automatic mode, the ACS scans programmed channels. When an operator places a call, the optimum channel is automatically selected. The ACS also provides an AJ mode which employs a frequency hopping technique used to combat the effects of enemy jammers and direction finding attempts. AJ keys control the pseudorandom hopping pattern and are loaded from the remote keyfill/data load panel located on the navigator's console using a KYK-13 or KOI-18 keyfill device. Two KY-75 secure voice systems are used in conjunction with the HF radios to provide secure HF communications. The secure voice system encrypts and decodes classified communications. KY-75 secure voice communications are not possible in the AJ mode. On airplanes equipped with multiple radio transmit capability, HF No. 1 can transmit simultaneously with VHF and UHF No.1 systems.

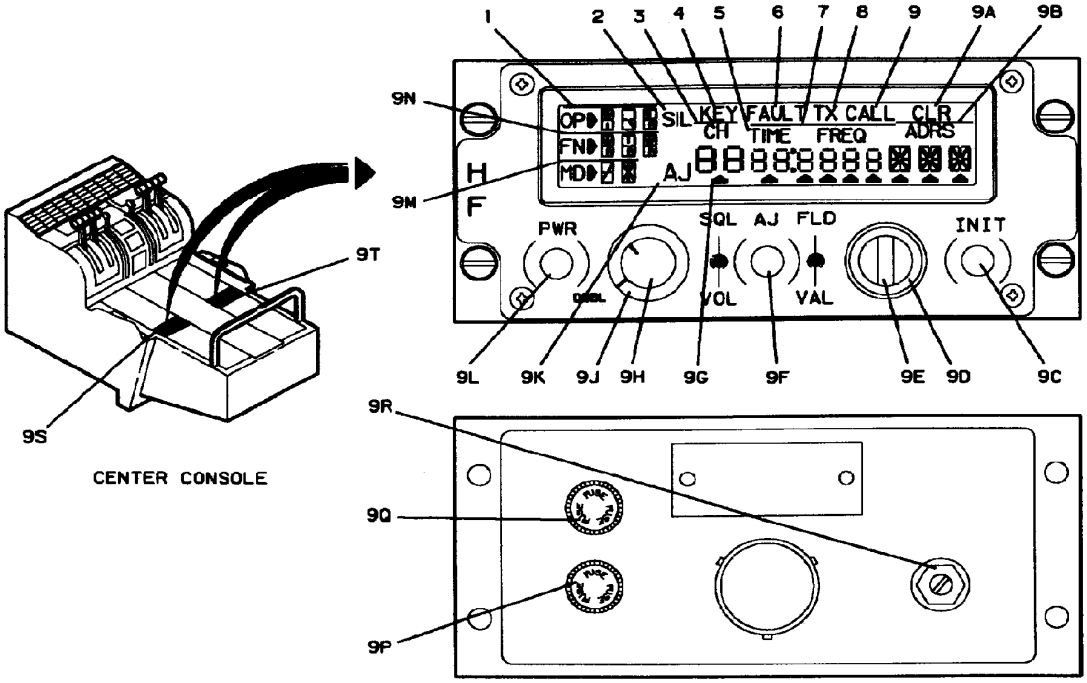

CENTER CONSOLE

REAR VIEW

NOTE:
CALLOUTS POINTING TO SOLID HORIZONTAL LINES ARE APPLICABLE TO THE DISPLAYED CHARACTERS BELOW THE LINE.

1. OPERATION DISPLAY FIELD
2. SILENT INDICATOR
3. CHANNEL DISPLAY FIELD
4. KEY INDICATOR
5. TIME INDICATOR
6. FAULT INDICATOR
7. TIME/FREQ DISPLAY FIELD
8. TRANSMIT INDICATOR
9. CALL INDICATOR
9A. CLEAR INDICATOR
9B. ADDRESS DISPLAY FIELD
9C. INITIATE SWITCH
9D. FIELD SELECTOR
9E. VALUE SELECTOR
9F. ANTIJAM INDICATOR
9G. FIELD SELECT CURSOR
9H. VOLUME SWITCH
9J. SQUELCH SWITCH
9K. ANTIJAM INDICATOR
9L. POWER SWITCH
9M. MODE DISPLAY FIELD
9N. FUNCTION DISPLAY FIELD
9P. SPARE FUSE
9Q. FUSE
9R. PANEL LIGHTING CONTROL
9S. HF ACS CONTROL PANEL NO.1
9T. HF ACS CONTROL PANEL NO.2

HF Communication Systems Components Locations (Sheet 1 of 8)

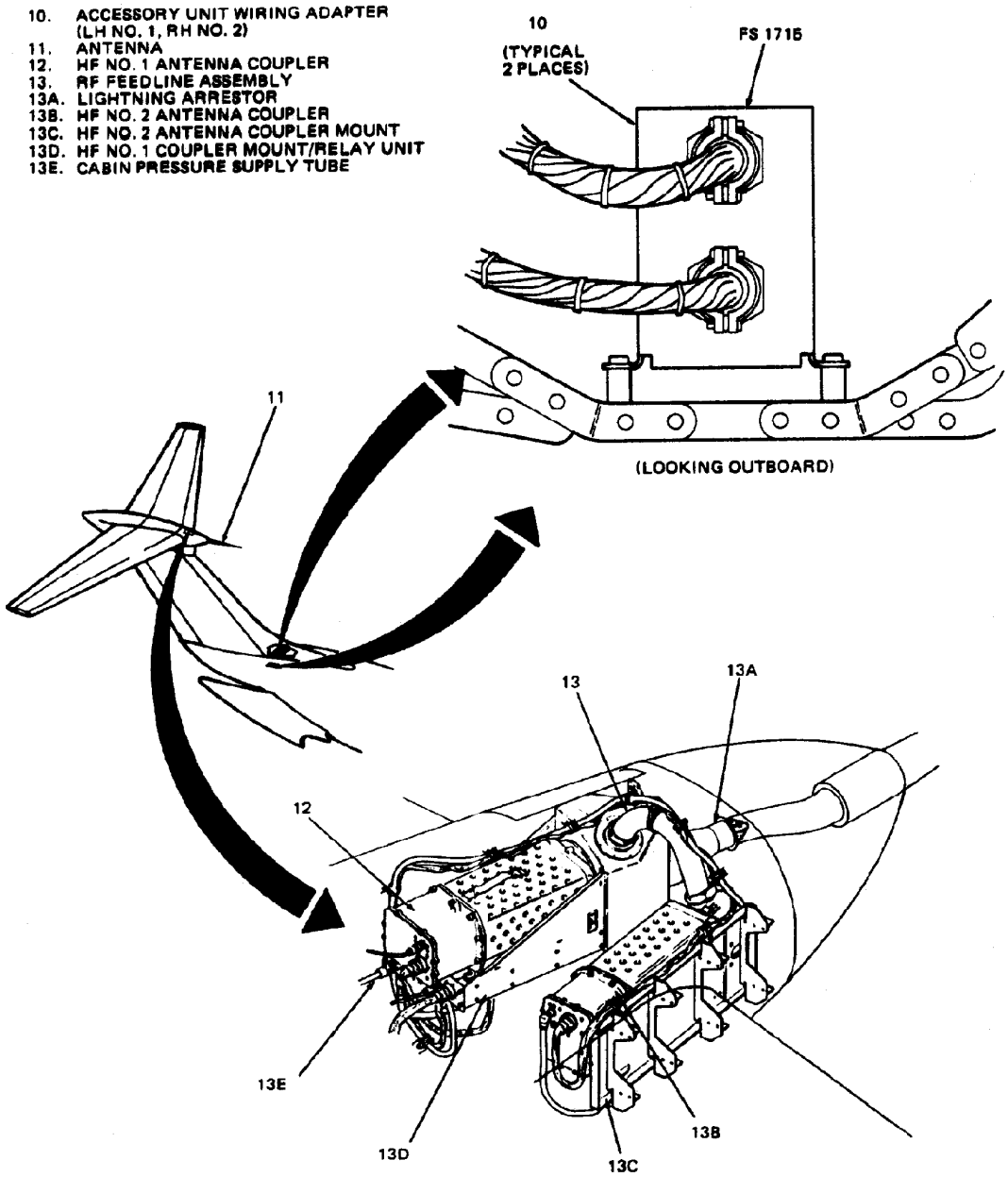

HF Communication Systems Components Locations (Sheet 2 of 8)

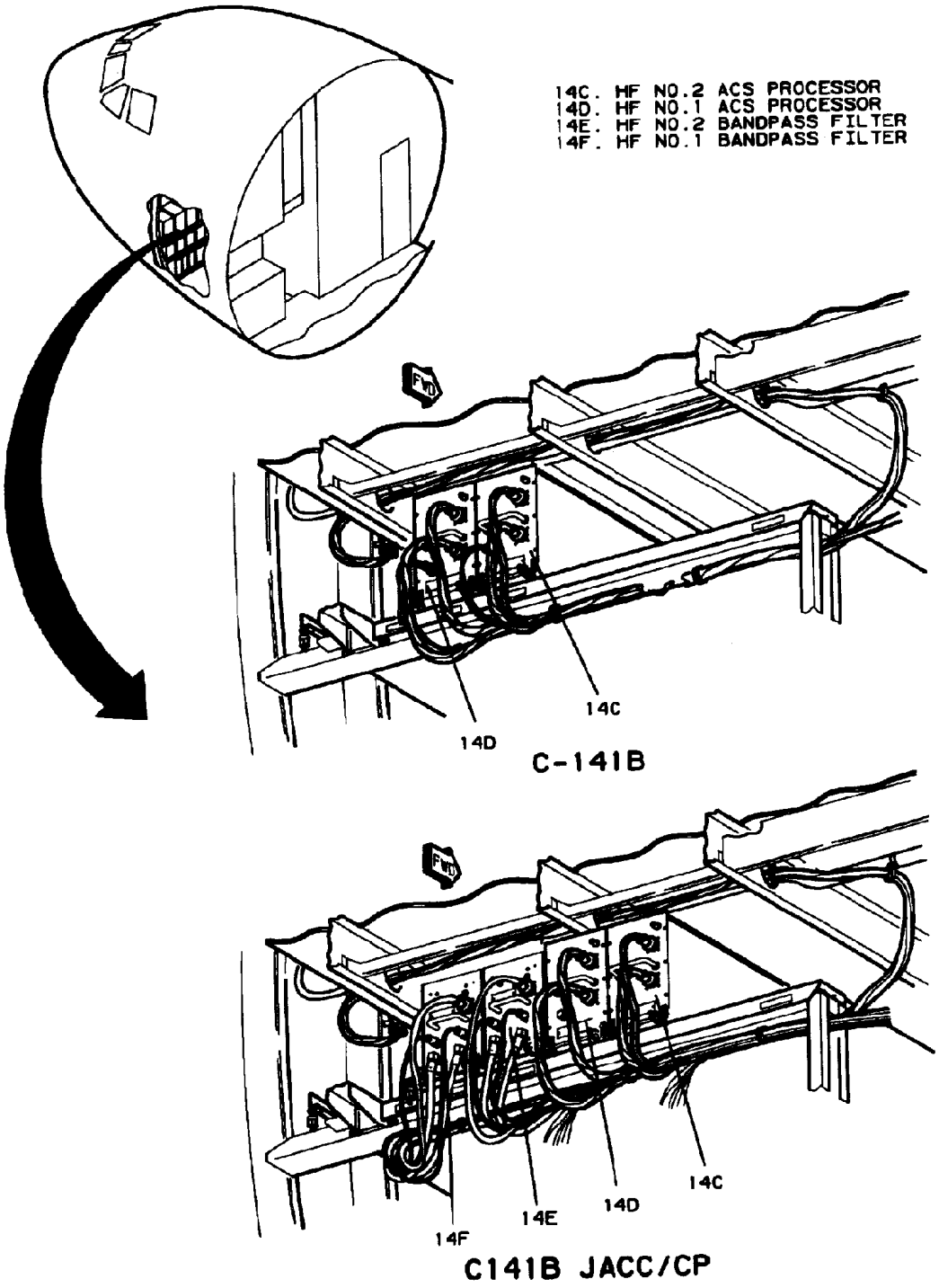

HF communication Systems Components Locations (Sheet 3 of 8)

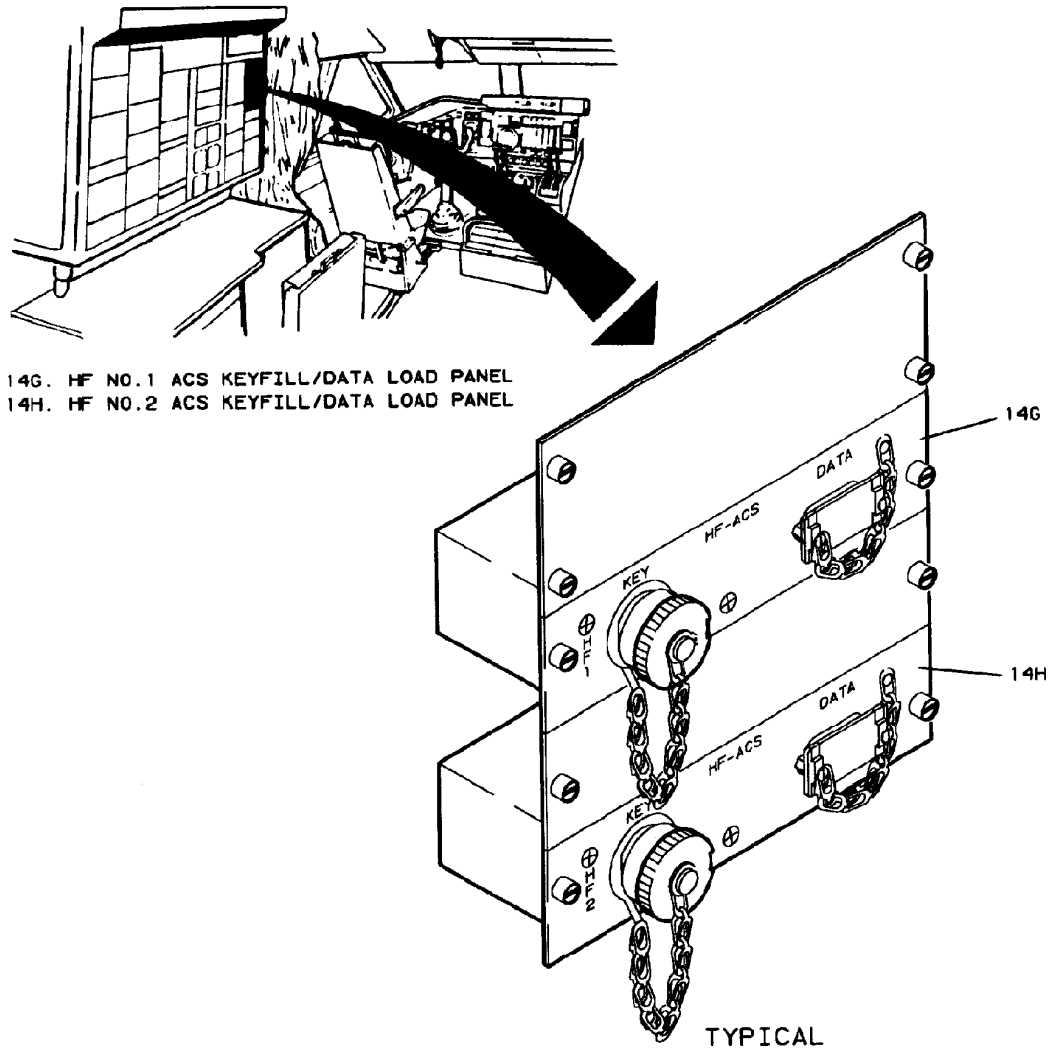

HF Communication Systems Components Locations (Sheet 4 of 8)

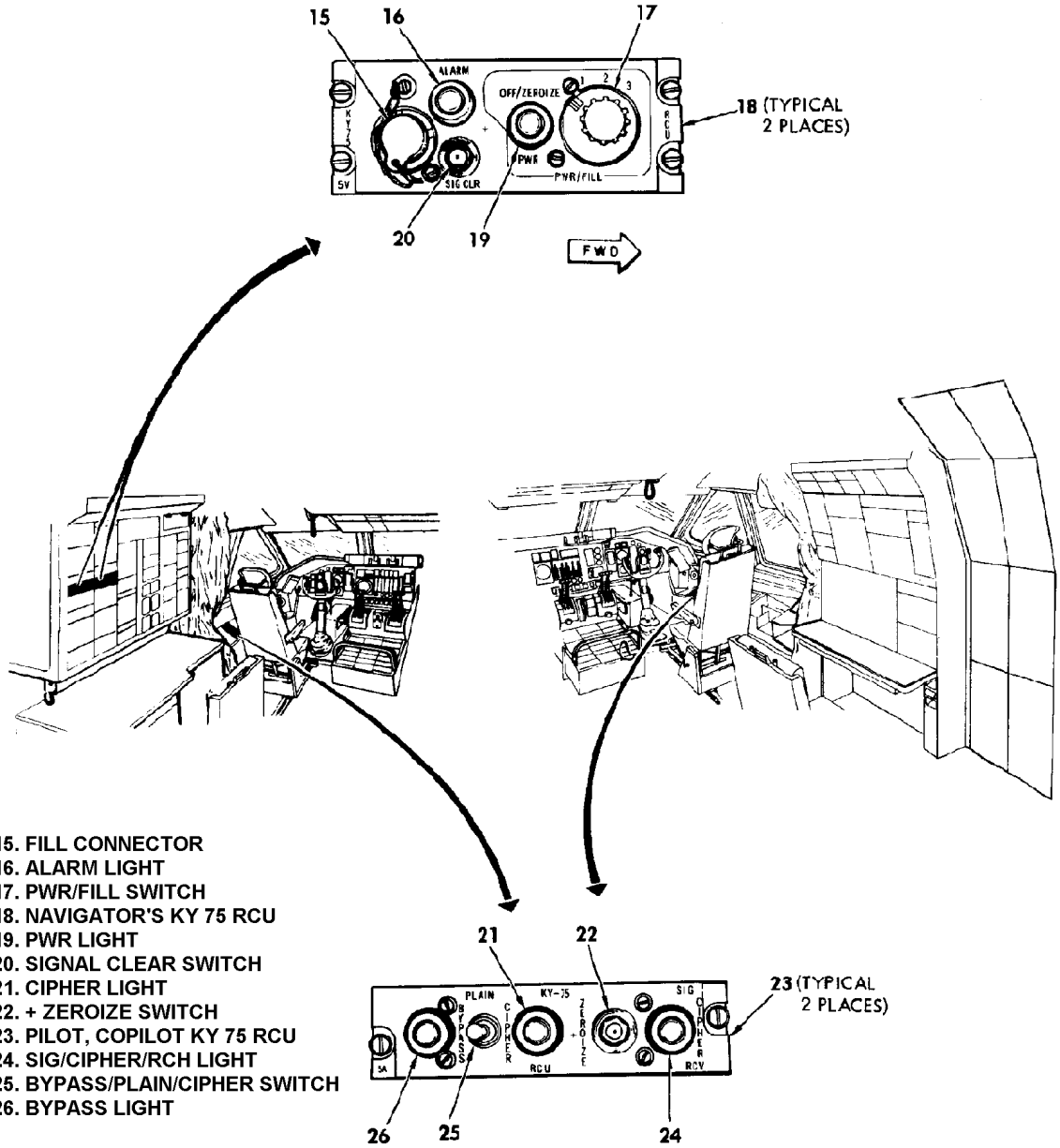

15. FILL CONNECTOR
16. ALARM LIGHT
17. PWR/FILL SWITCH
18. NAVIGATOR'S KY 75 RCU
19. PWR LIGHT
20. SIGNAL CLEAR SWITCH
21. CIPHER LIGHT
22. + ZEROIZE SWITCH
23. PILOT, COPILOT KY 75 RCU
24. SIG/CIPHER/RCH LIGHT
25. BYPASS/PLAIN/CIPHER SWITCH
26. BYPASS LIGHT

HF Communication Systems Components Locations (Sheet 5 of 8)

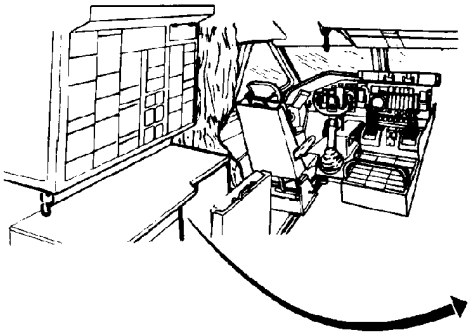

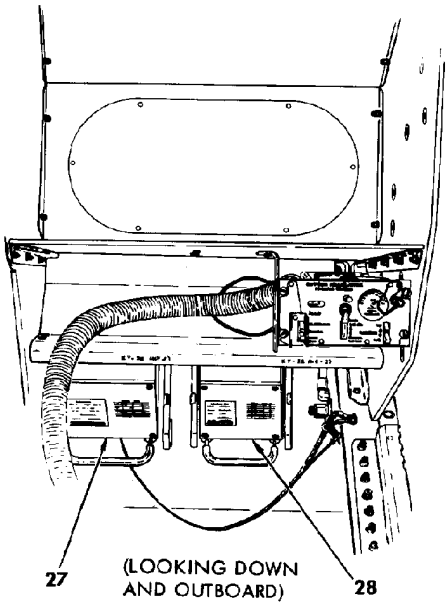

27. HF NO. 1 KY-75 PROCESSOR
28. HF NO. 2 KY-75 PROCESSOR
29. HF NO. 1 REMOTE RELAY BOX
30. HF NO. 2 REMOTE RELAY BOX

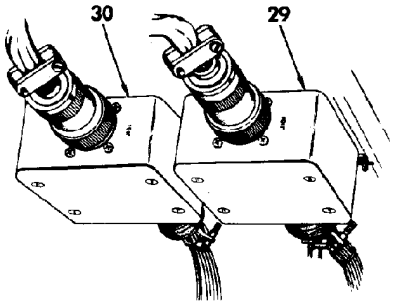

(LOOKING FWD)

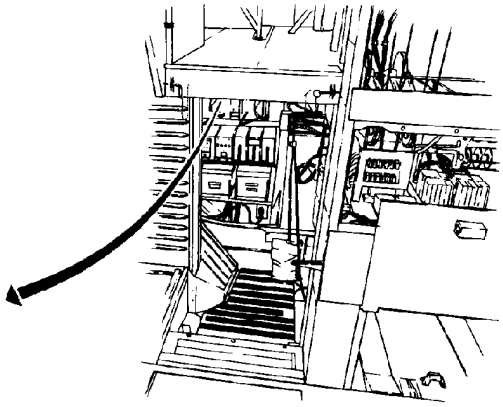

(LOOKING FWD INTO LH
AVIONICS COMPARTMENT)

HF Communication Systems Components Locations (Sheet 6 of 8)

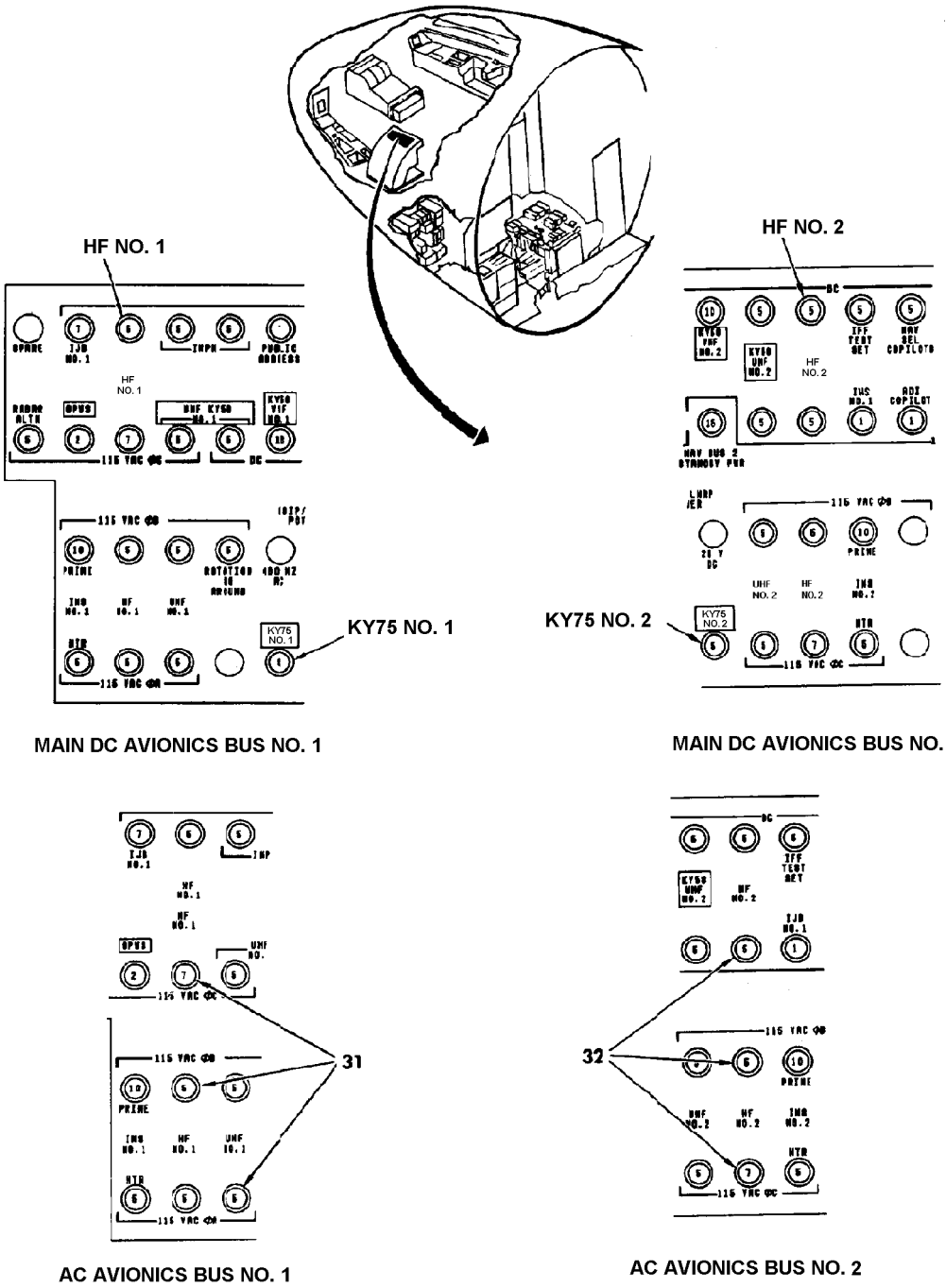

HF Communication Systems Components Locations (Sheet 7 of 8)

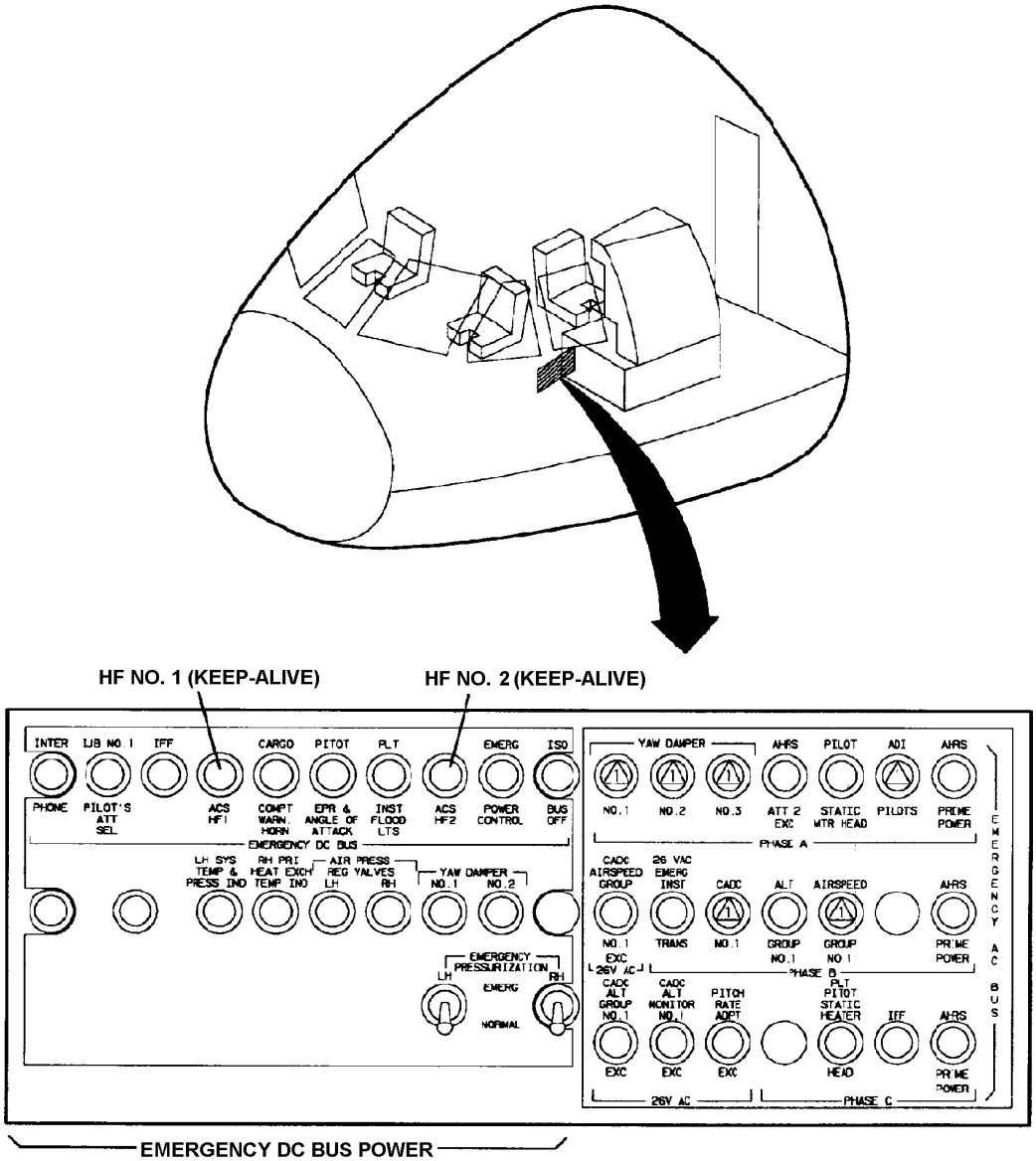

HF Communication Systems Components Locations (Sheet 8 of 8)

Very High Frequency (VHF) Systems

The VHF communication systems are used to transmit and receive amplitude modulated (AM) radio communications. Voice (audio) signals to be transmitted are supplied through the interphone system. Audio received from other stations is supplied to the interphone system headsets. Two complete VHF communication systems (No.1 and No. 2) are installed. Both systems operate independently and can be used simultaneously. Each system provides channels spaced 25 KHz apart, from 116.00 to 151.975 MHz. The transmitter power output is approximately 10 watts nominal of RF energy. VHF No.1 or No.2 may be operated by the pilot or copilot from control panels on the center console. VHF communication is used primarily during landing, takeoff, air-to-air, and air-to-ground operations. Because of the straight-line radiation characteristics of VHF radio waves, communication is restricted to line-of-sight distances. Average communication distances from airplane-to-ground are approximately 40 miles at 1,000 feet to 135 miles at 10,000 feet altitude. VHF No. 1 and No. 2 are provided a KY-58 secure voice system. The system encrypts and decodes classified transmissions between pilot, copilot or navigator and external transmitter/receivers. VHF and UHF radio KY-58 secure voice systems are discussed with multiple radio transmit capability, VHF No. 1 can transmit and receive simultaneously with HF and UHF No. 1 systems.

1. VHF CONTROL PANEL NO. 1
2. VHF CONTROL PANEL NO. 2
3. NAV SLEW SWITCH ACTIVE/INACTIVE INDICATOR
4. COMM SLEW SWITCH ACTIVE/INACTIVE INDICATOR
5. NAV VOLUME CONTROL
6. SLEW ENABLE SELECT SWITCH
7. DISPLAY BRIGHTNESS CONTROL
8. MODE SELECT SWITCH
9. HUNDREDTHS/THOUSANDTHS PRESET CHANNEL SLEW SWITCH
10. TENTHS SLEW SWITCH
11. MEMORY LOAD SWITCH
12. UNITS SLEW SWITCH
13. TENS/HUNDREDS SLEW SWITCH
14. COMM MODE CONTROL SWITCH
15. SQUELCH DISABLE/TONE SELECT SWITCH
16. COMM VOLUME CONTROL
17. NAV/LAMP TEST SWITCH
18. NAV DISPLAY
19. COMM DISPLAY

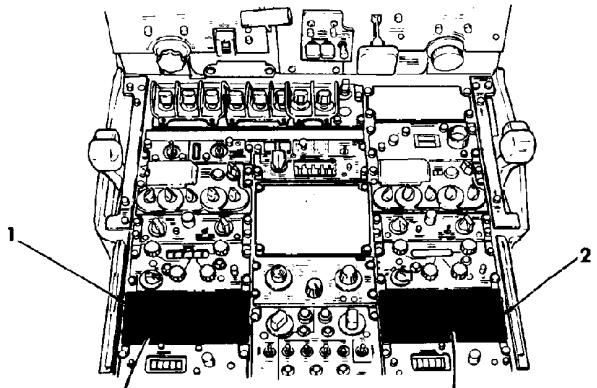

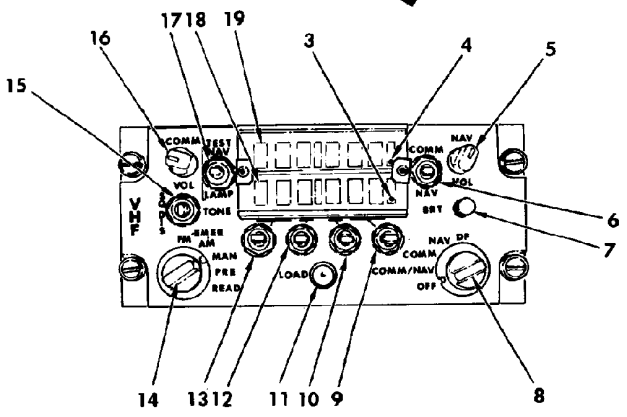

VHF Communication Systems Component Locations (Sheet 1 of 4)

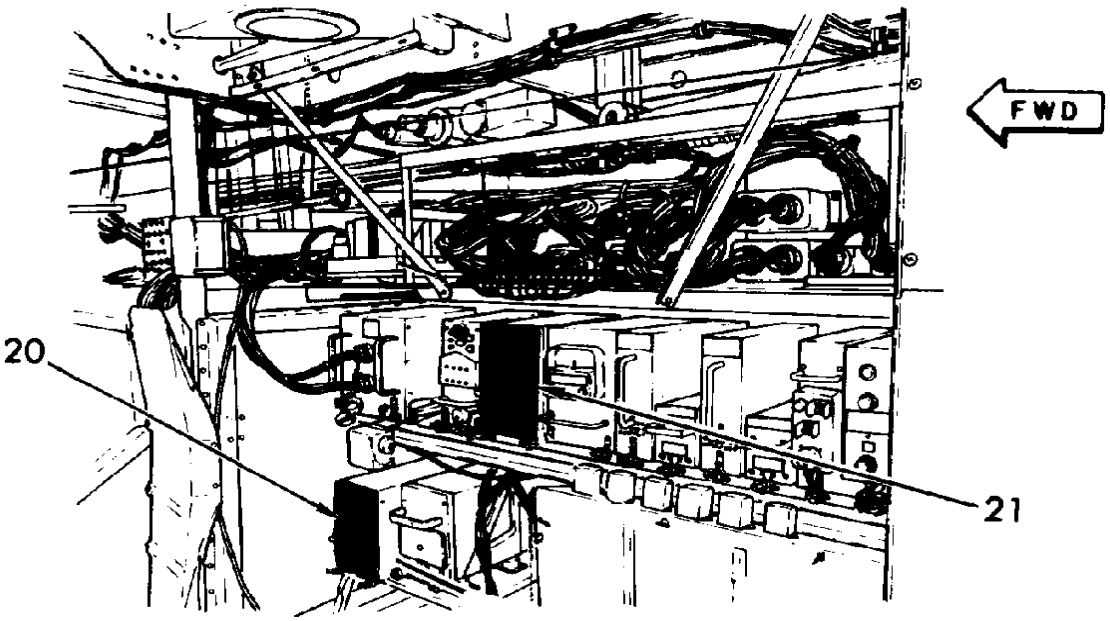

LH AVIONICS
COMPARTMENT
(LOOKING INBOARD)

20. VHF NO. 2 TRANSCEIVER
21. VHF NO. 1 TRANSCEIVER

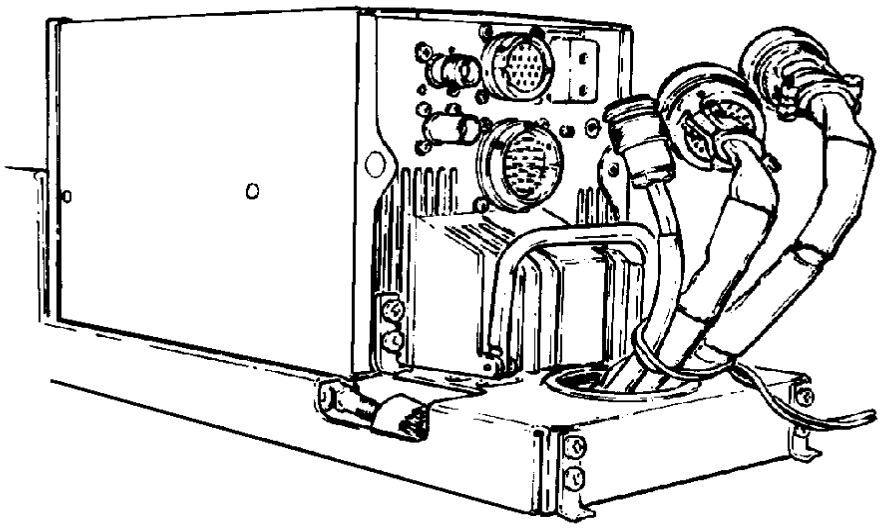

VHF Communication Systems Component Locations (Sheet 2 of 4)

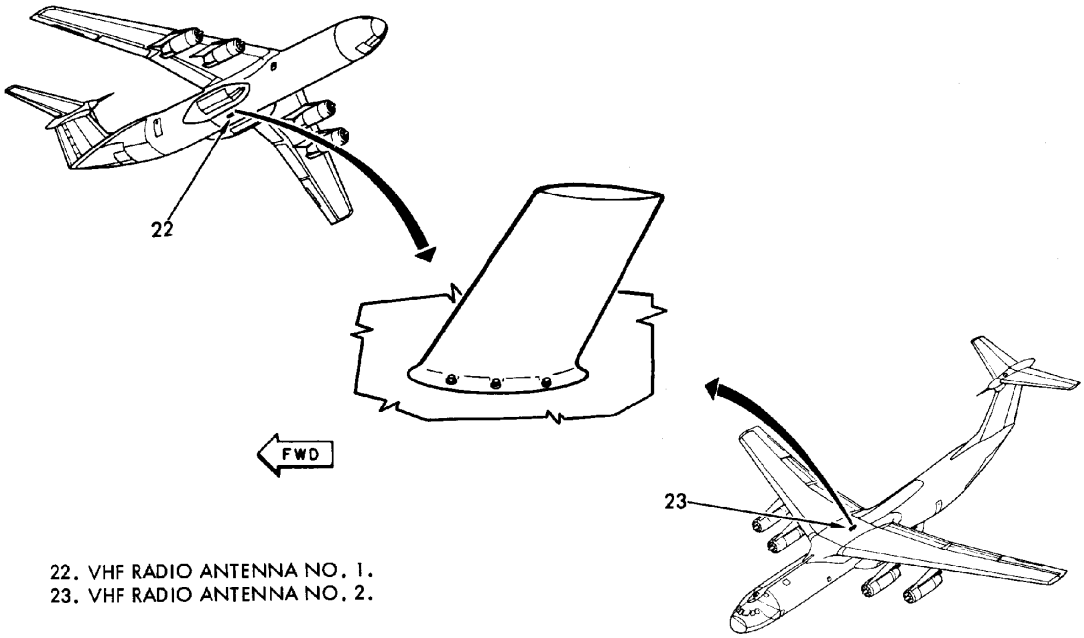

22. VHF RADIO ANTENNA NO. 1.
23. VHF RADIO ANTENNA NO. 2.

VHF Communication Systems Component Locations (Sheet 3 of 4)

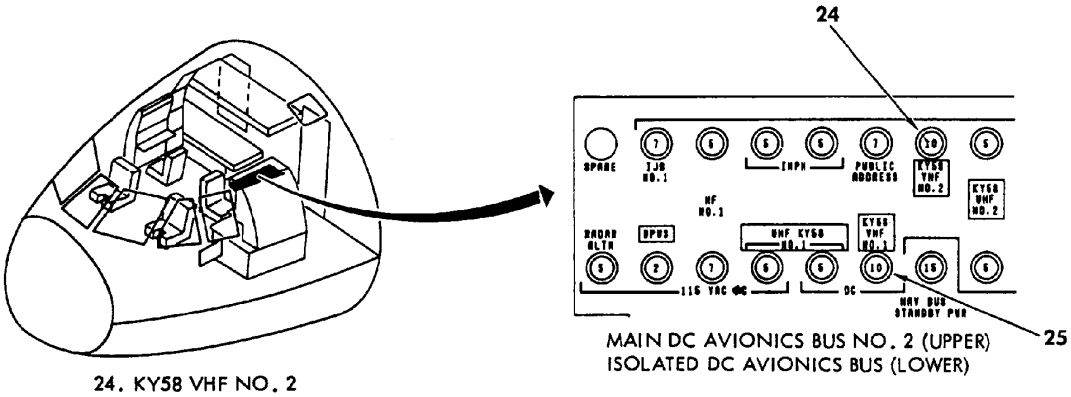

24. KY58 VHF NO. 2
25. KY58 VHF NO. 1

VHF Communication Systems Component Locations (Sheet 4 of 4)

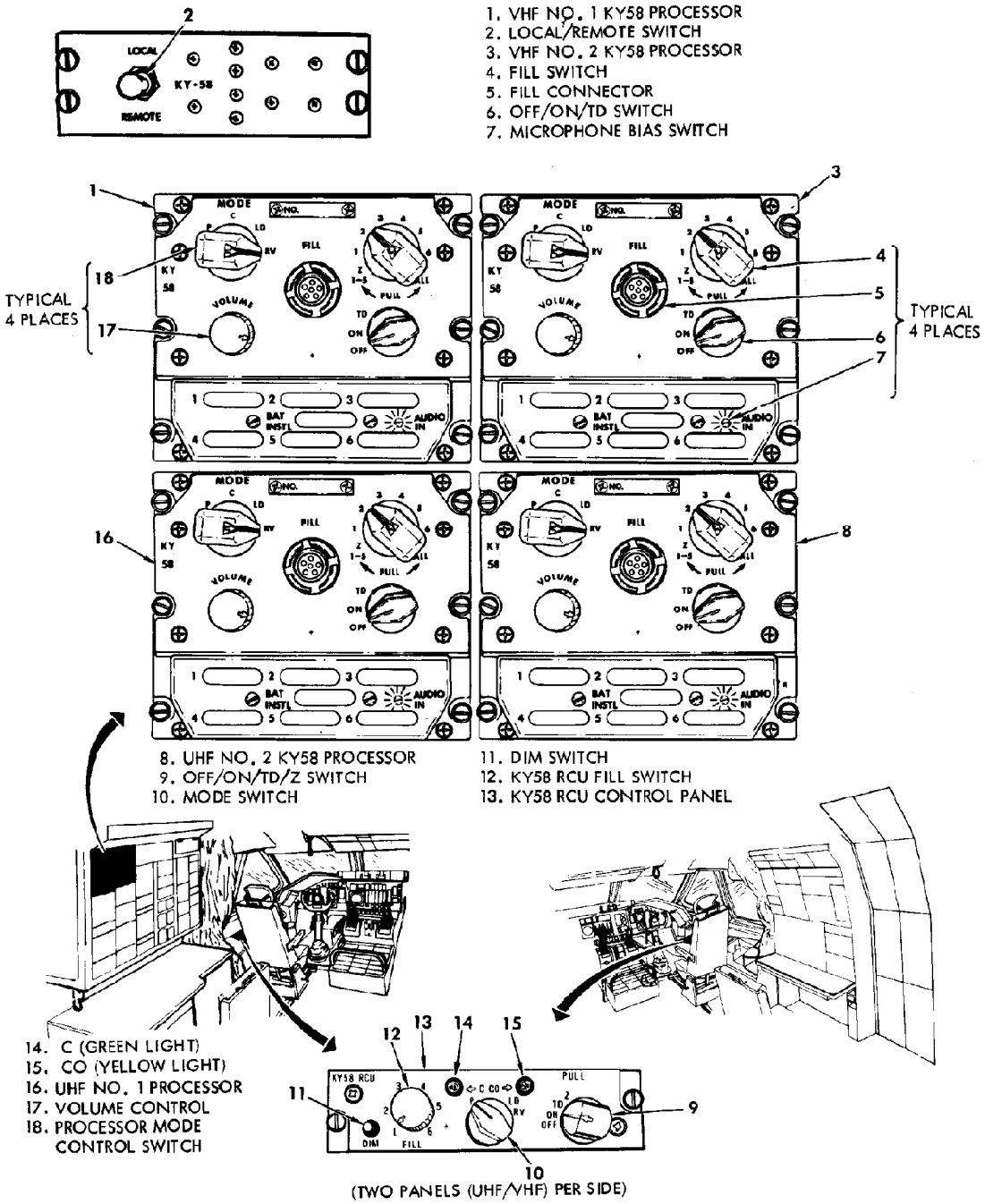

KY 58 Secure Voice Component Locations

Multiple Radio Transmit Installation

Airplanes equipped with multiple radio transmit capability can simultaneously transmit and receive on UHF No. 1, VHF No. 1, and HF No. 1 radio systems. Simultaneous transmission is accomplished by rotating the pilot's interphone function selector switch to UI and placing the MULT RAD XMIT switch to ON (the multiple transmit indicator light will come on at this time). To receive simultaneously, the pilot's interphone control panel monitor switches VI and HI must be pulled to ON. Each interphone station equipped with radio transmit capability will be able to transmit simultaneously when the pilot has selected UI and the MULT RAD XMIT switch is placed to ON.

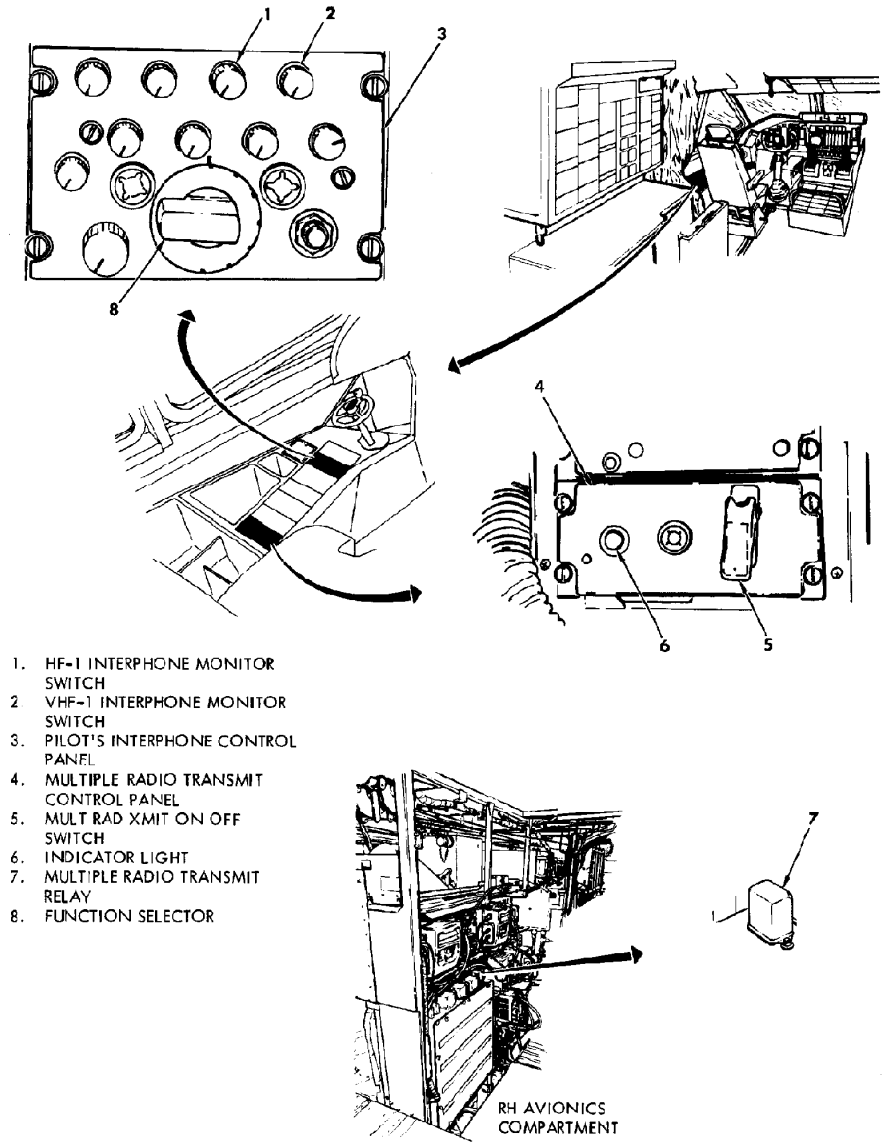

Multiple Radio Transmit Component Locations (Sheet 1 of 2)

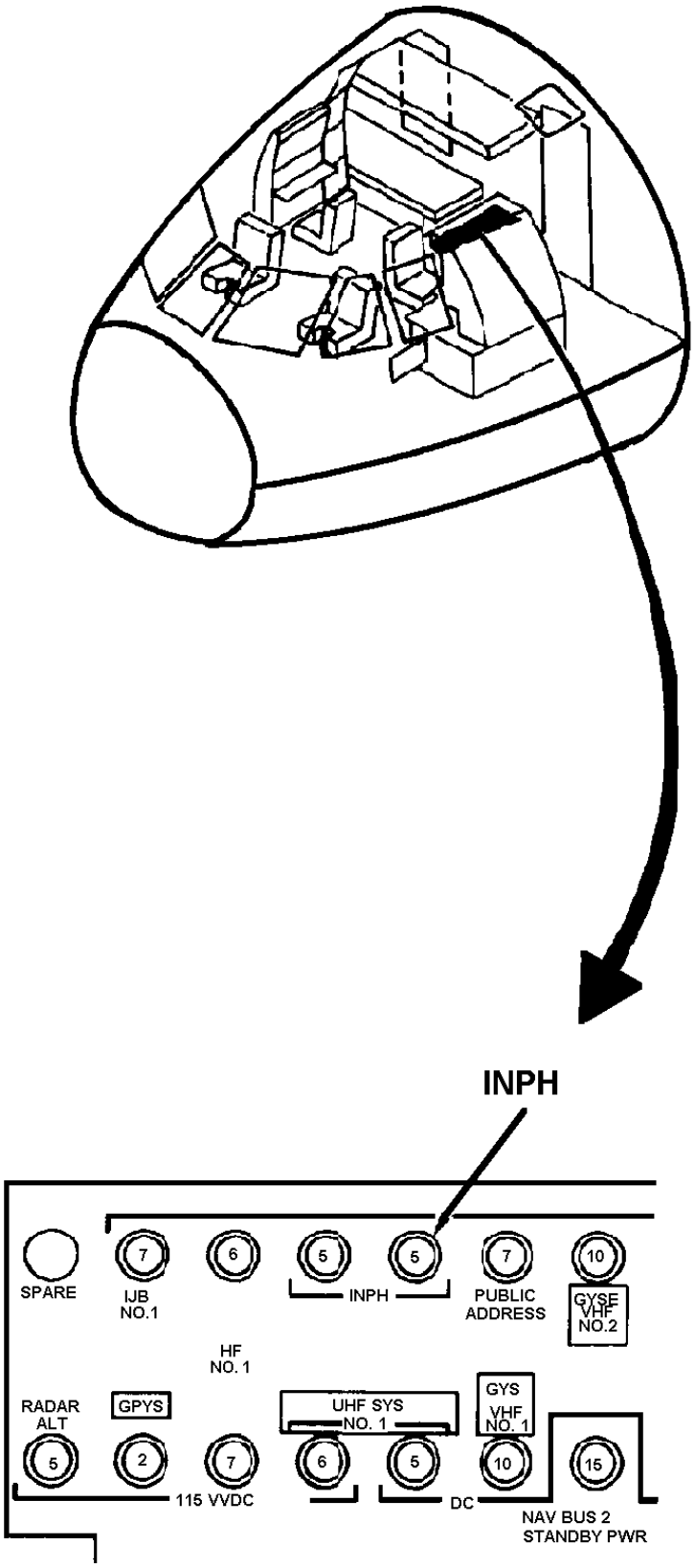

Multiple Radio Transmit Component Locations
(Sheet 2 of 2)

Ultra High Frequency (UHF) Systems

Dual UHF radio systems are used for line-of-sight, radio-telephone communication. The systems are designated UHF No. 1 and UHF No. 2. Communication range varies with altitude. As the altitude of the airplane increases, the line-of-sight range increases. The systems provide two-way, AM (amplitude modulation), double-side-band transmission and reception. UHF radio system Have Quick capability provides air-to-air, and air-ground-air, jam-resistant voice communication. The Have Quick UHF radio system has a frequency hopping capability. Frequency hopping is a technique where the frequency being used for communication is rapidly changed many times per second. Frequency hopping is implemented by storing a pattern of frequencies for a given day within every Have Quick UHF radio and utilizing this pattern according to the time of day. The frequency used at a particular instant depends on the precise time of day; both UHF radios of a Have Quick communication link must have synchronized clocks. Universal coordinated time (UCT) has been adopted for Have Quick UHF radio time. A secure voice system encrypts and decodes classified transmissions between pilot, copilot or navigator and external transmitter/receivers. On airplanes equipped with multiple radio transmit, UHF No. 1 can transmit and receive simultaneously with HF No.1 and VHF No.1 systems.

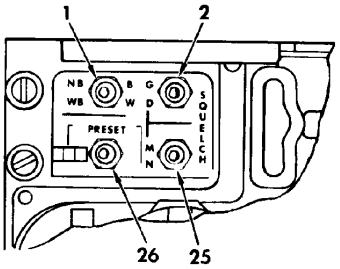

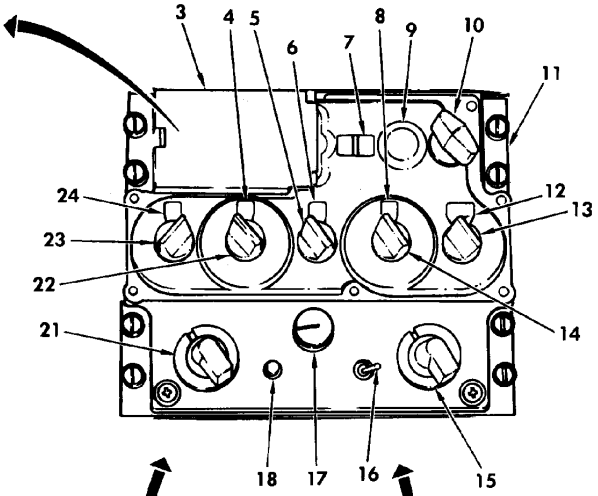

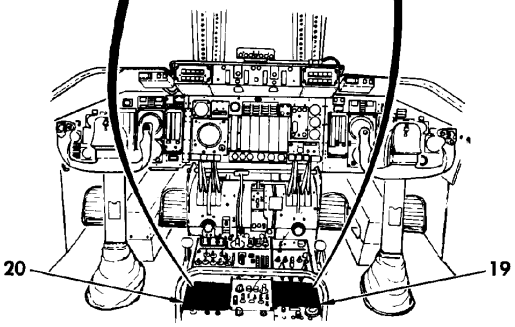

1. BANDWIDTH SWITCH
2. SQUELCH-GD ADJ
3. PRESET FREQUENCIES CHART
4. TENS MHZ INDICATOR
5. UNITS MHZ SELECTOR
6. UNITS MHZ INDICATOR
7. PRESET CHANNEL INDICATOR
8. TENTHS MHZ INDICATOR
9. DECAL USED ON RT-1505 ONLY
10. PRESET CHANNEL SELECTOR SWITCH
11. UHF TRANSCEIVER
12. HUNDREDTHS/THOUSANDTHS MHZ INDICATOR
13. HUNDREDTHS/THOUSANDTHS MHZ SELECTOR
14. TENTHS MHZ SELECTOR
15. MANUAL-PRESET-GUARD SWITCH
16. SQUELCH ON-OFF SWITCH
17. VOLUME CONTROL
18. TONE SWITCH
19. UHF NO. 2 TRANSCEIVER
20. UHF NO. 1 TRANSCEIVER
21. FUNCTION SELECTOR SWITCH
22. TENS MHZ SELECTOR
23. T-2-3-A SELECTOR
24. 2-3 HUNDREDS MHZ AND A-T POSITION INDICATOR
25. SQUELCH MN ADJ
26. PRESET SWITCH

UHF Communication Systems Component Locations (Sheet 1 of 6)

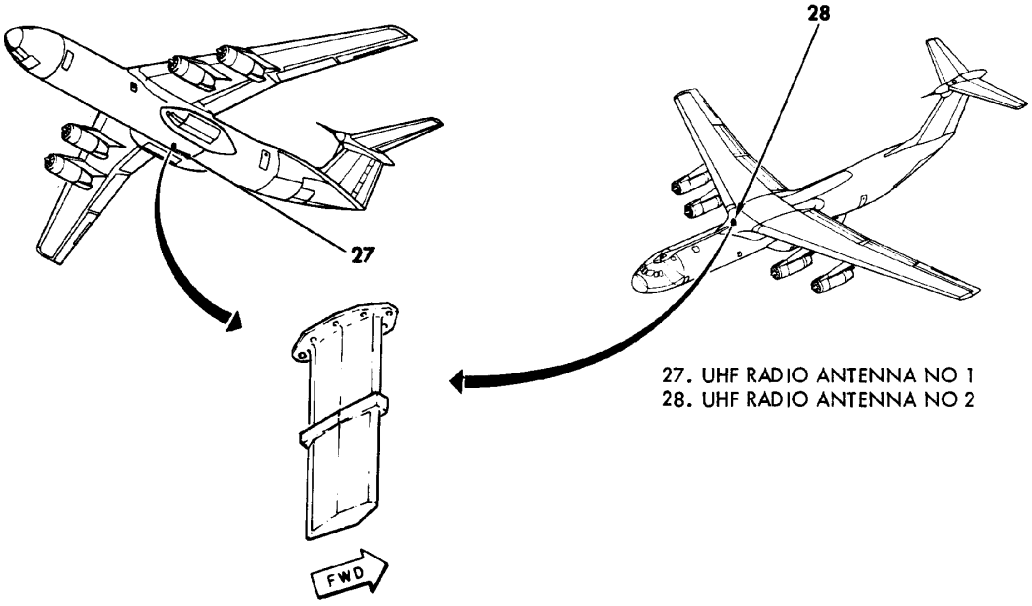

UHF Communication Systems Component Locations (Sheet 2 of 6)

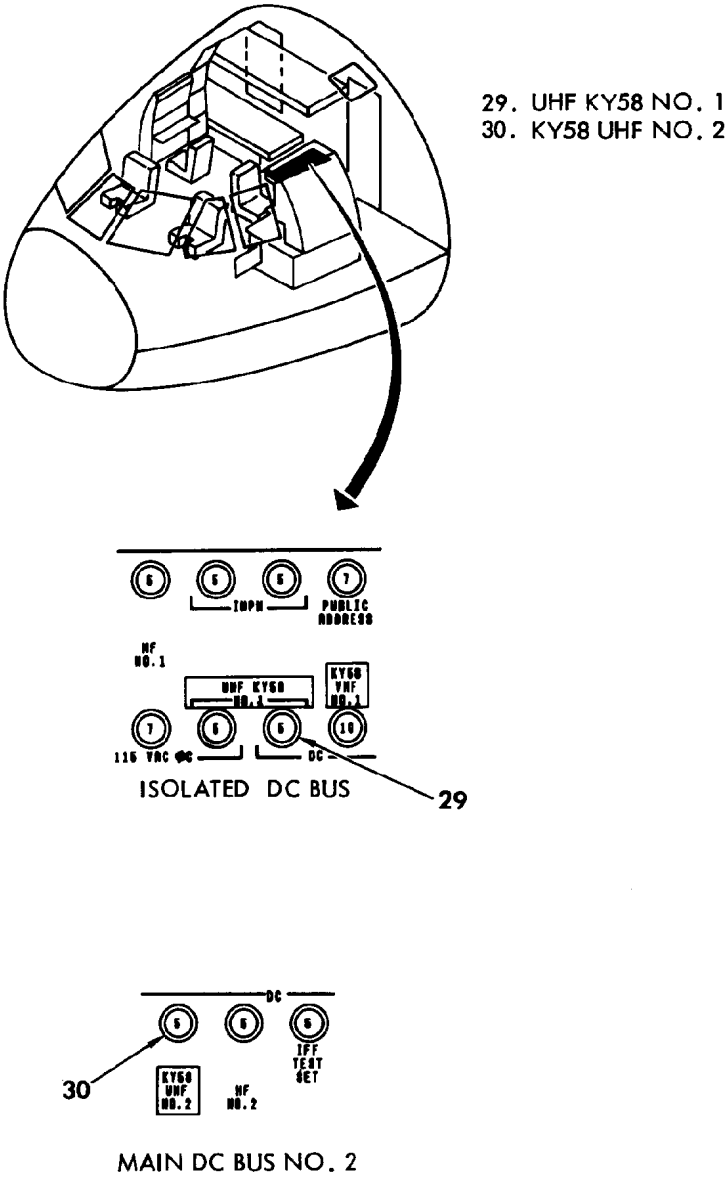

UHF Communication Systems Component Locations (Sheet 3 of 6)

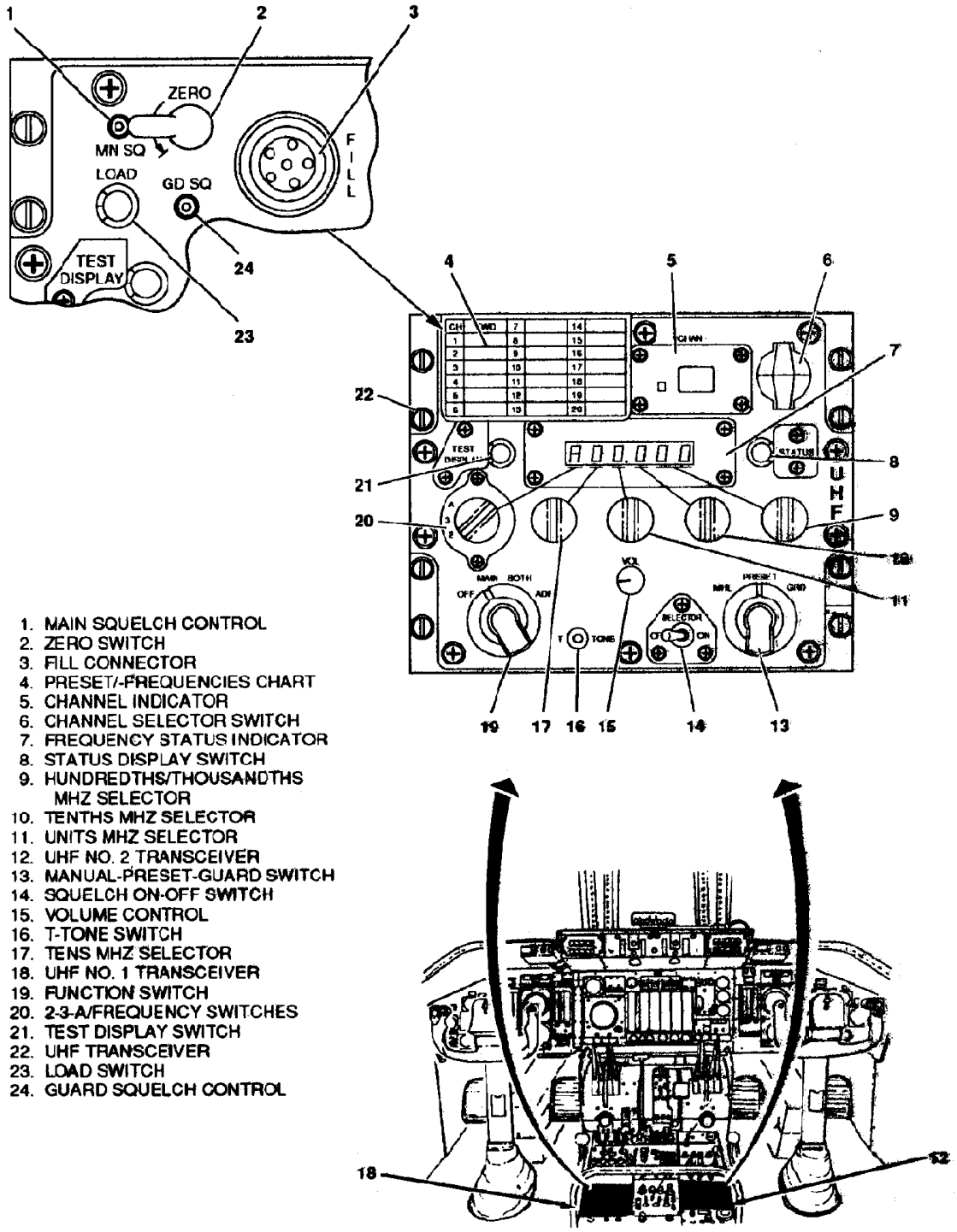

UHF Communication Systems Component Locations (Sheet 4 of 6)

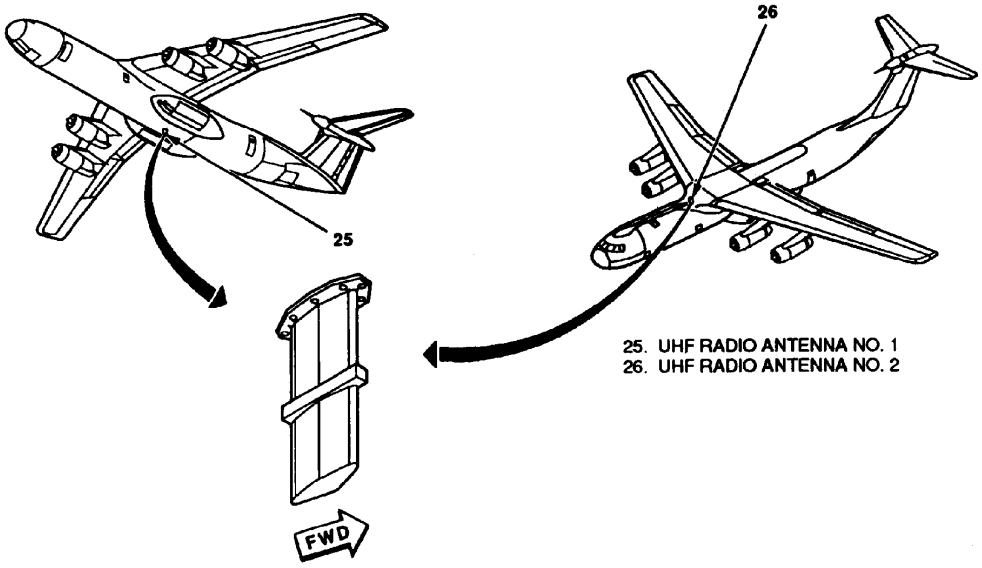

UHF Communication Systems Component Locations (Sheet 5 of 6)

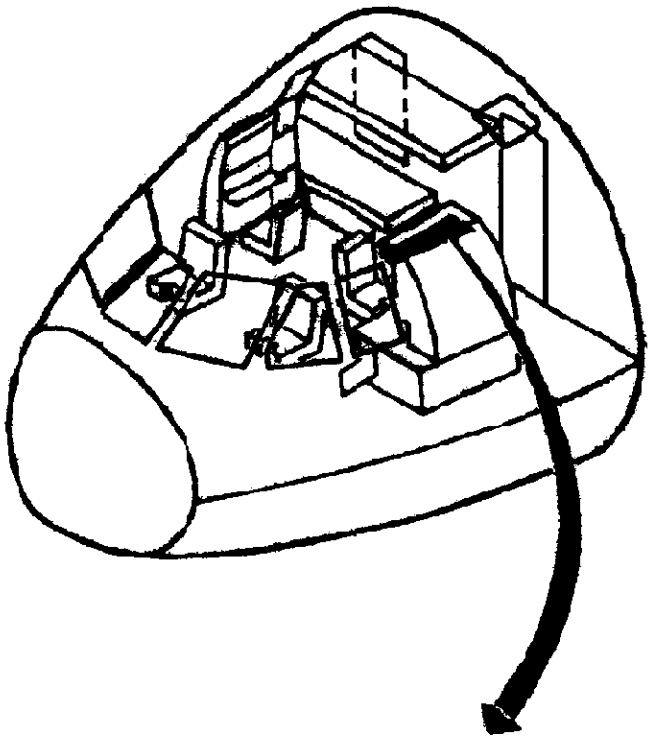

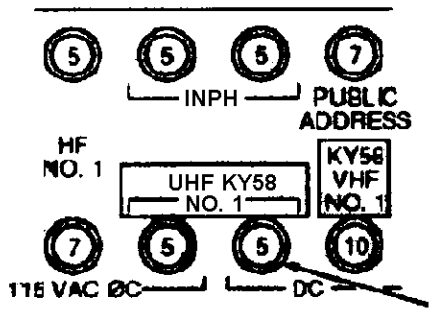

ISOLATED DC BUS

UHF KY58 NO. 1

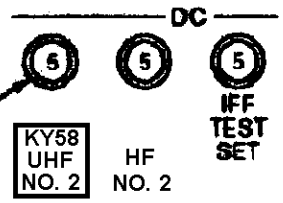

KY58 UHF NO. 2

MAIN DC BUS NO. 2

UHF Communication Systems Component Locations (Sheet 6 of 6)

Interphone and Public Address (PA) Systems

The interphone system provides communication among the crew members in the flight station and cargo compartment. Communication with the ground crew is also possible through external receptacles. In addition to interphone communication, the system provides switching and mixing facilities for selecting and monitoring the radio communication and navigation systems. A loudspeaker is used in the flight station to monitor the pilot's audio signals. The speaker also serves as an audible warning of an engine fire, airplane overspeed, or under spoiler speed. There are ten interphone stations within the airplane. Five stations are in the flight station area, three in the cargo area, one in the avionics equipment rack, and one in the vertical stabilizer. Three external receptacles are installed for ground maintenance. One is on the lower left side of the fuselage just forward of the nose wheel, one is near the forward end of the main wheel well, and one is in the right main wheel well. The aft receptacles connect into the cargo area panels and the forward receptacle connects into the avionics equipment rack. The flight station loudspeaker is installed overhead in the flight station aft of the pilot's position.

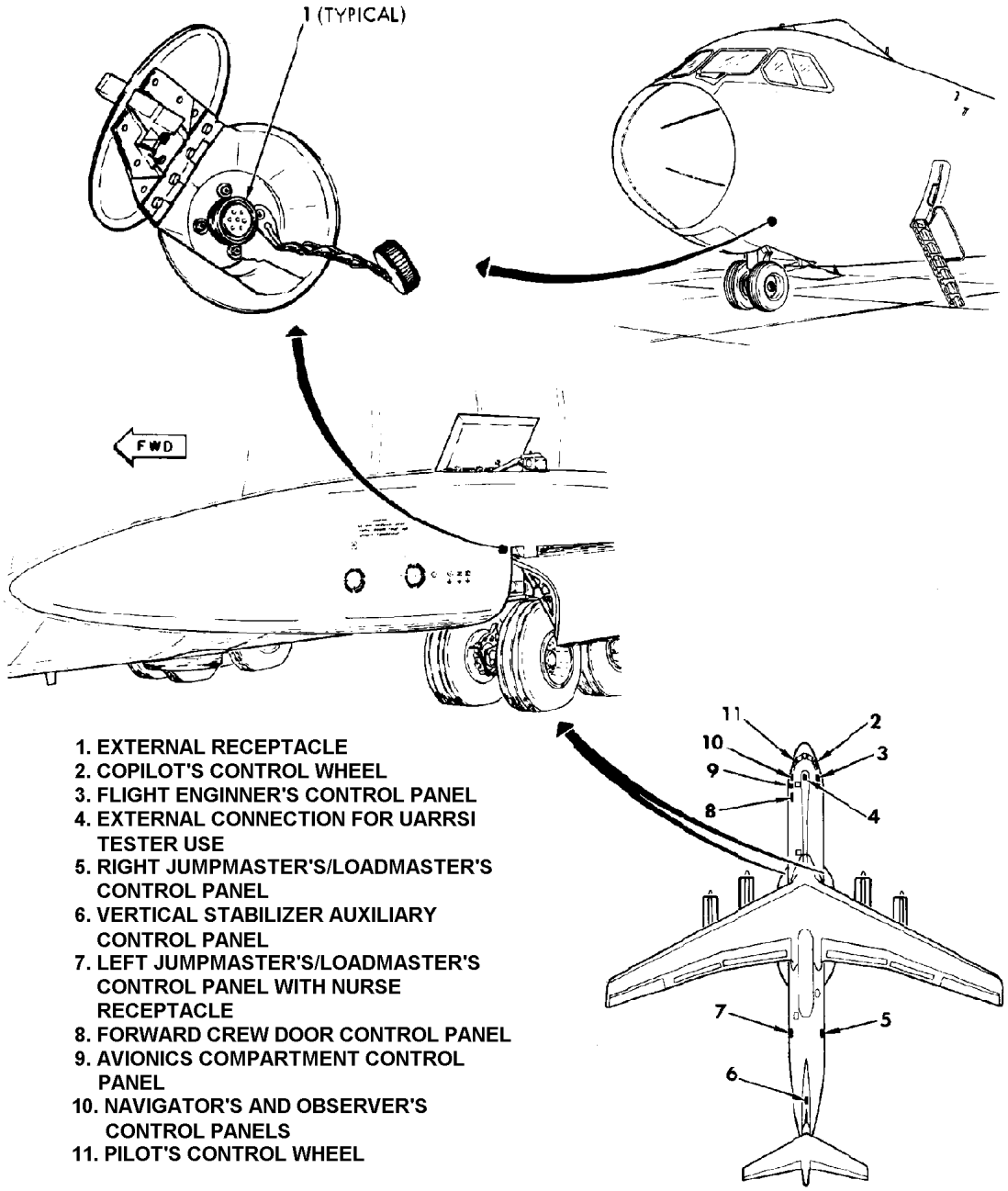

1. EXTERNAL RECEPTACLE
2. COPILOT'S CONTROL WHEEL
3. FLIGHT ENGINNER'S CONTROL PANEL
4. EXTERNAL CONNECTION FOR UARRSI TESTER USE
5. RIGHT JUMPMASTER'S/LOADMASTER'S CONTROL PANEL
6. VERTICAL STABILIZER AUXILIARY CONTROL PANEL
7. LEFT JUMPMASTER'S/LOADMASTER'S CONTROL PANEL WITH NURSE RECEPTACLE
8. FORWARD CREW DOOR CONTROL PANEL
9. AVIONICS COMPARTMENT CONTROL PANEL
10. NAVIGATOR'S AND OBSERVER'S CONTROL PANELS
11. PILOT'S CONTROL WHEEL

Interphone Comm. System Component Locations (Sheet 1 of 5)

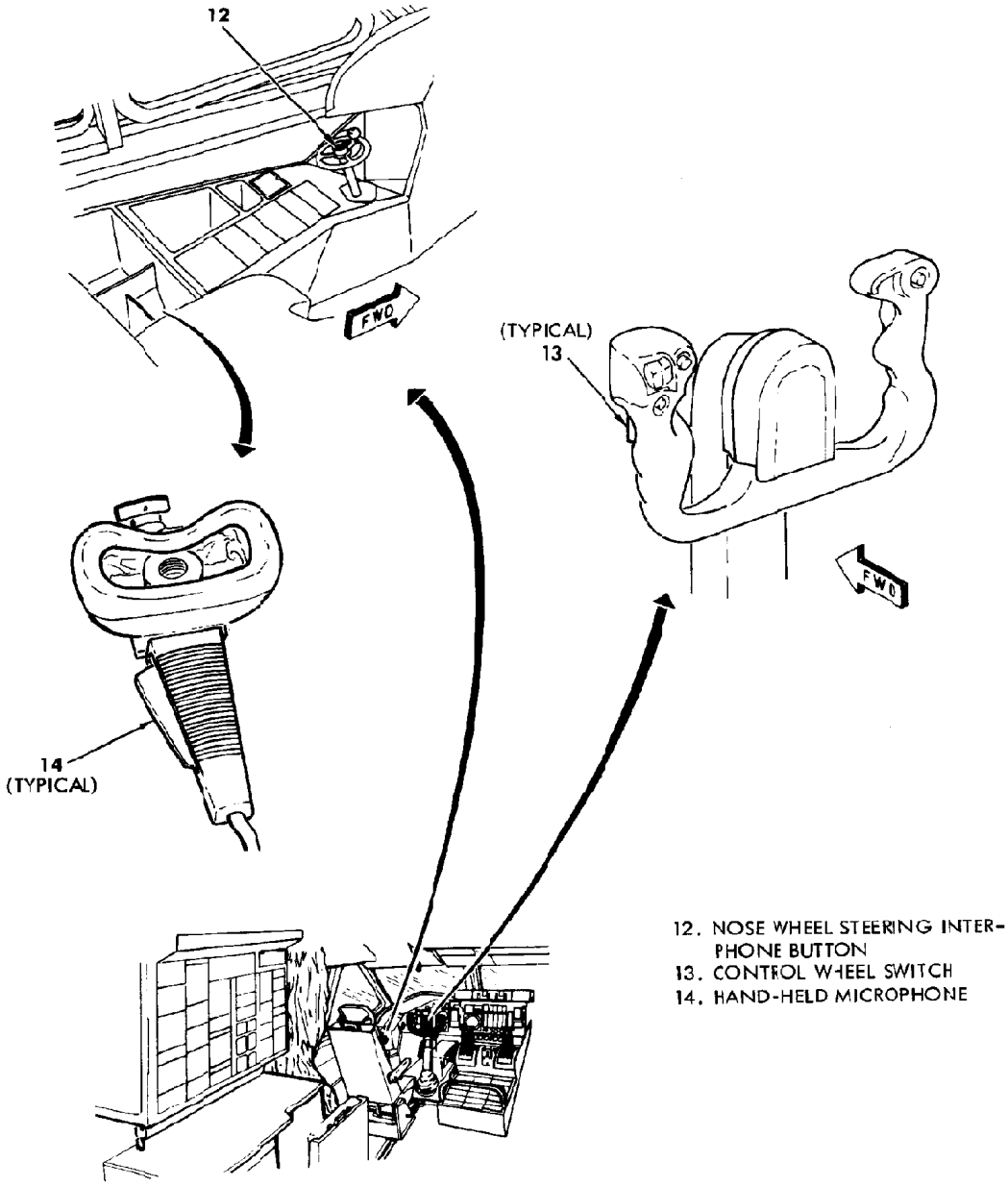

Interphone Comm. System Component Locations (Sheet 2 of 5)

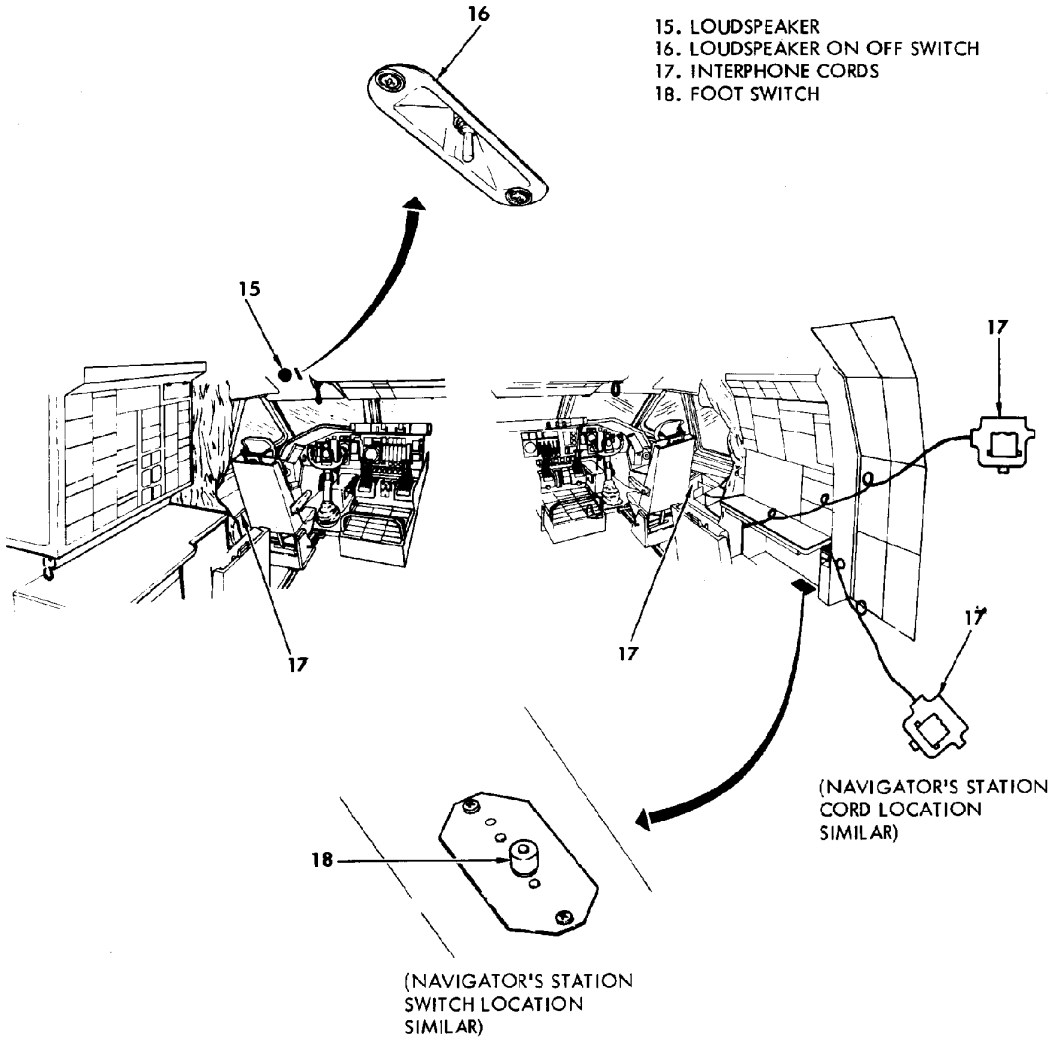

Interphone Comm. System Component Locations (Sheet 3 of 5)

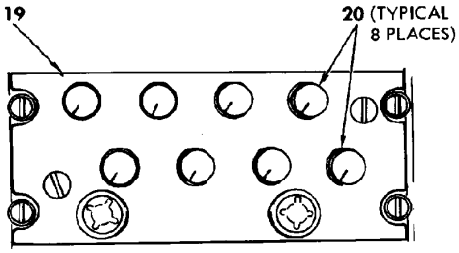

19. INTERPHONE MONITOR PANEL
20. ON, OFF, VOLUME CONTROL, MONITOR SWITCHES

21. CALL SWITCH
22. FUNCTION SELECTOR

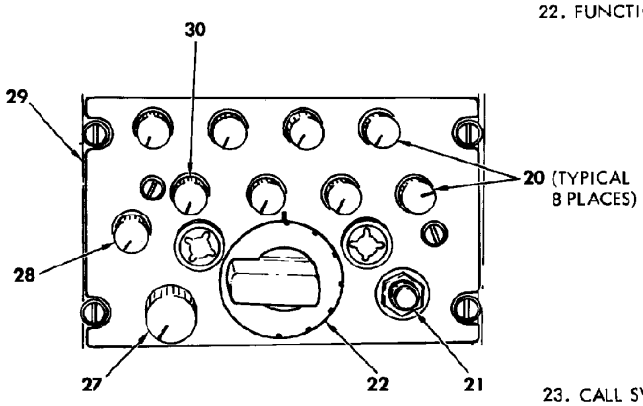

23. CALL SWITCH
24. VOLUME CONTROL
25. INTERPHONE CORD RECEPTACLE

26. AUXILIARY INTERPHONE CONTROL PANEL (VERTICAL STABILIZER)
27. VOLUME CONTROL
28. HOT MIC TALK SWITCH
29. INTERPHONE CONTROL PANEL
30. LISTEN SWITCH

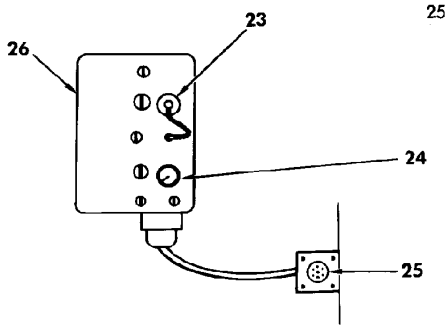

Interphone Comm. System Component Locations (Sheet 4 of 5)

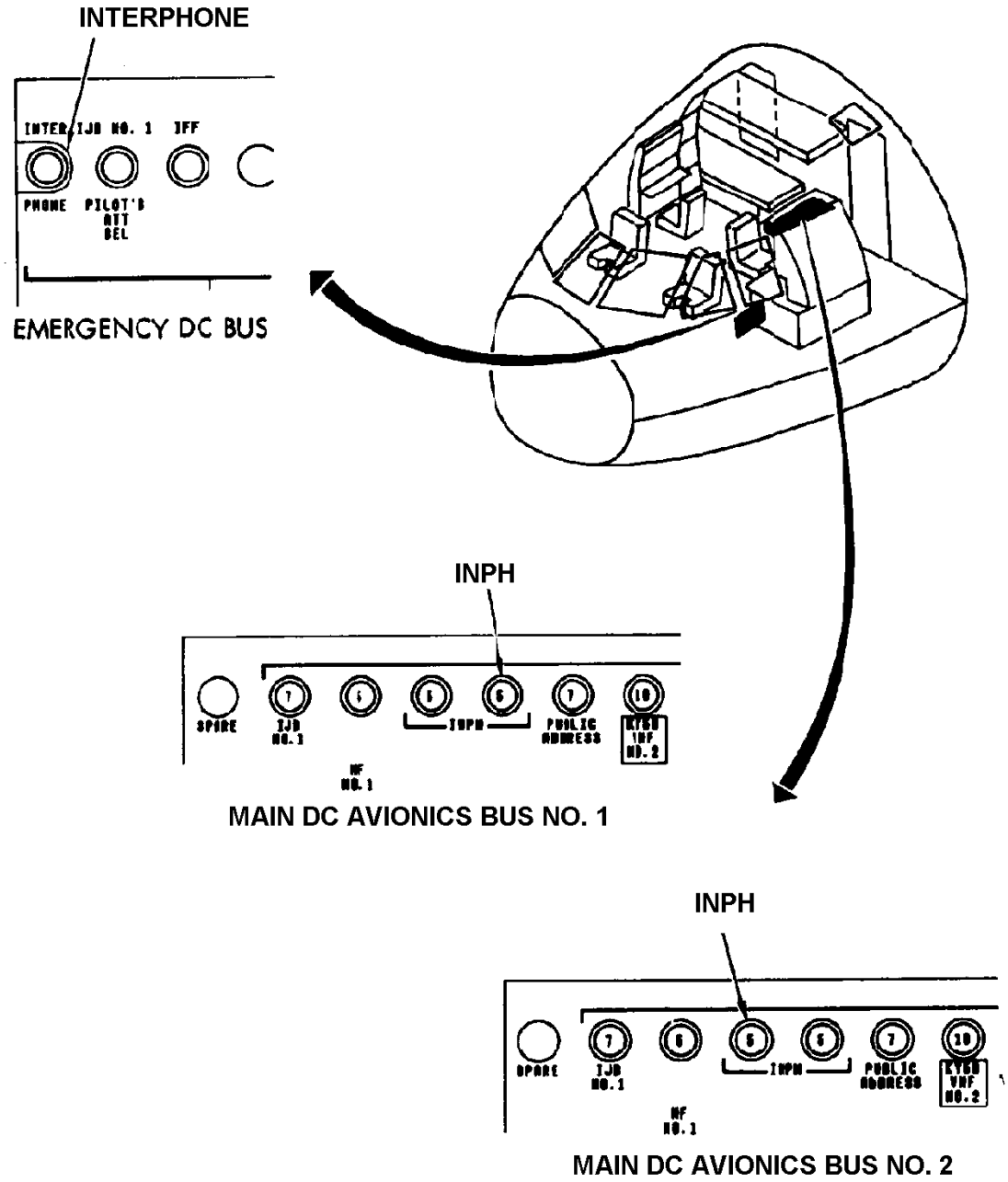

Interphone Comm. System Component Locations (Sheet 5 of 5)

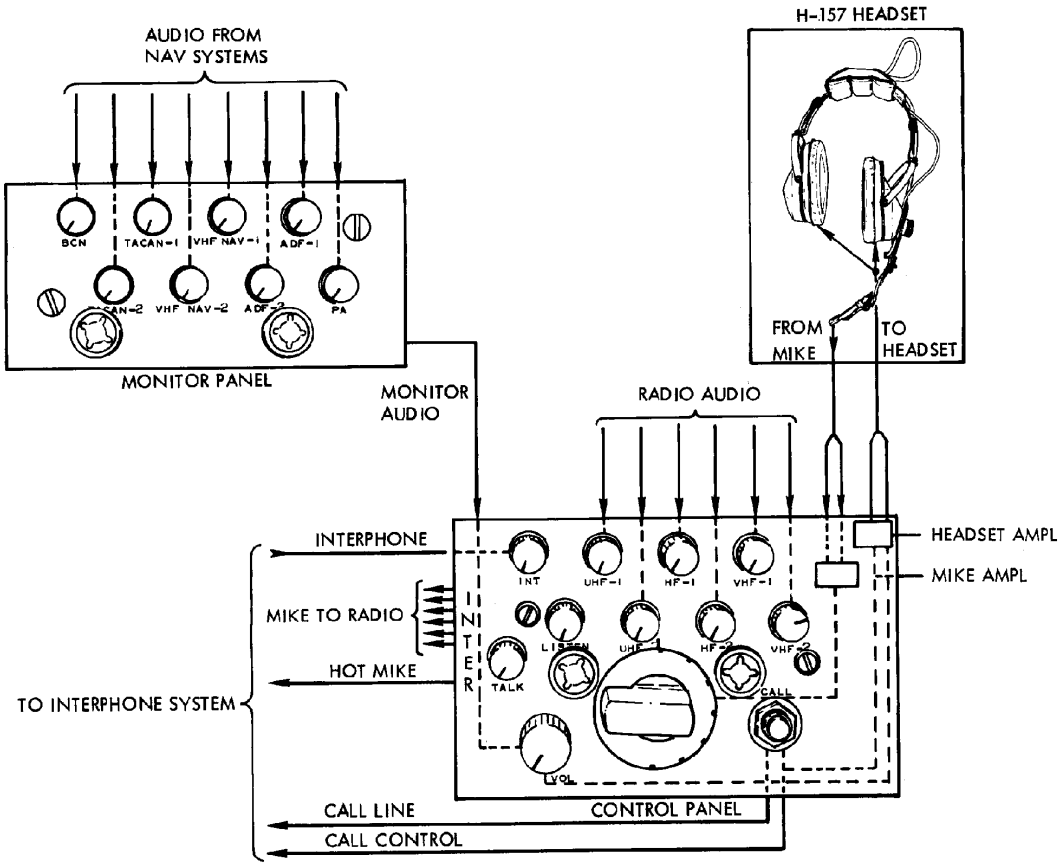

Interphone Communication System Data Flow Diagram

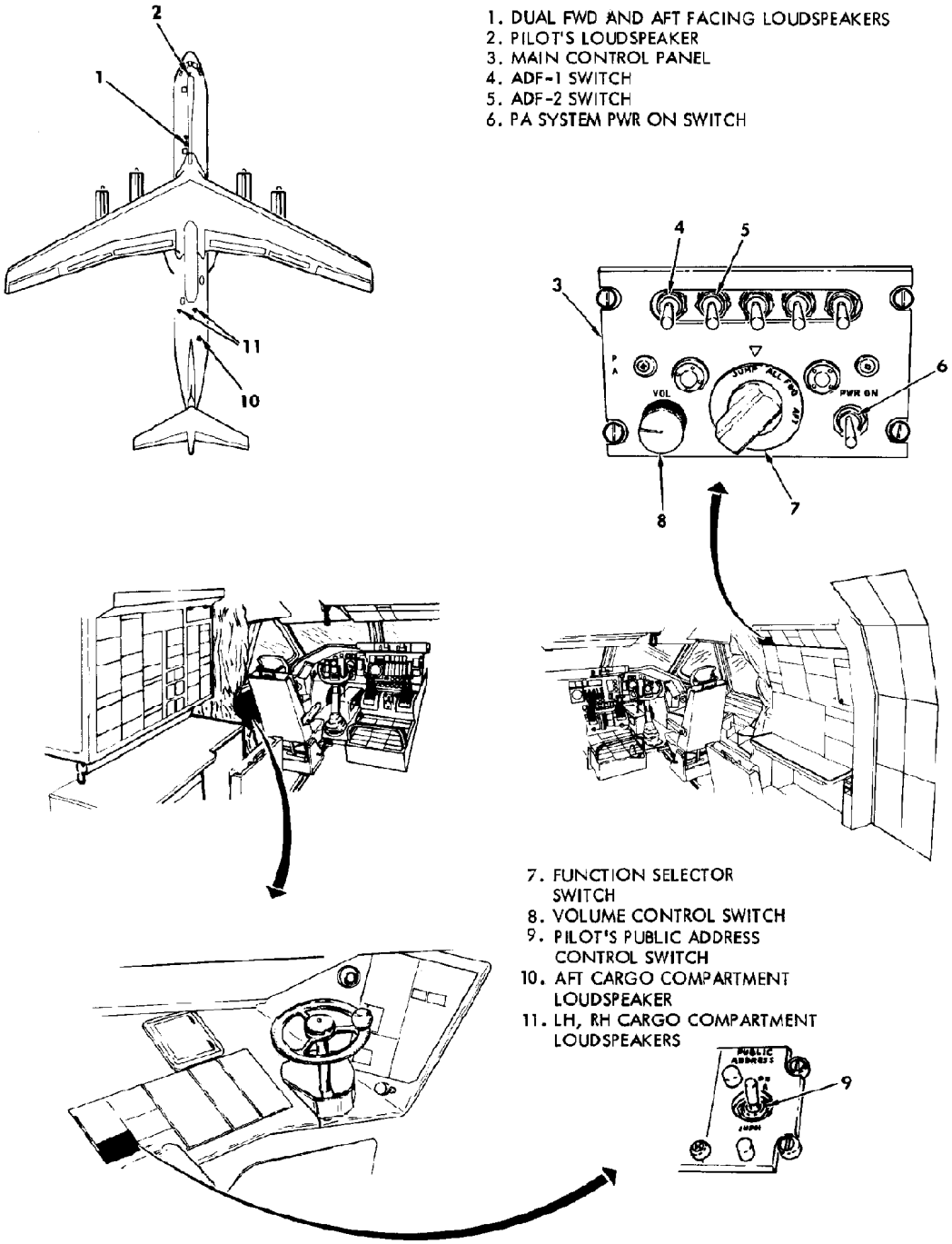

Public Address System Component Locations (Sheet 1 of 3)

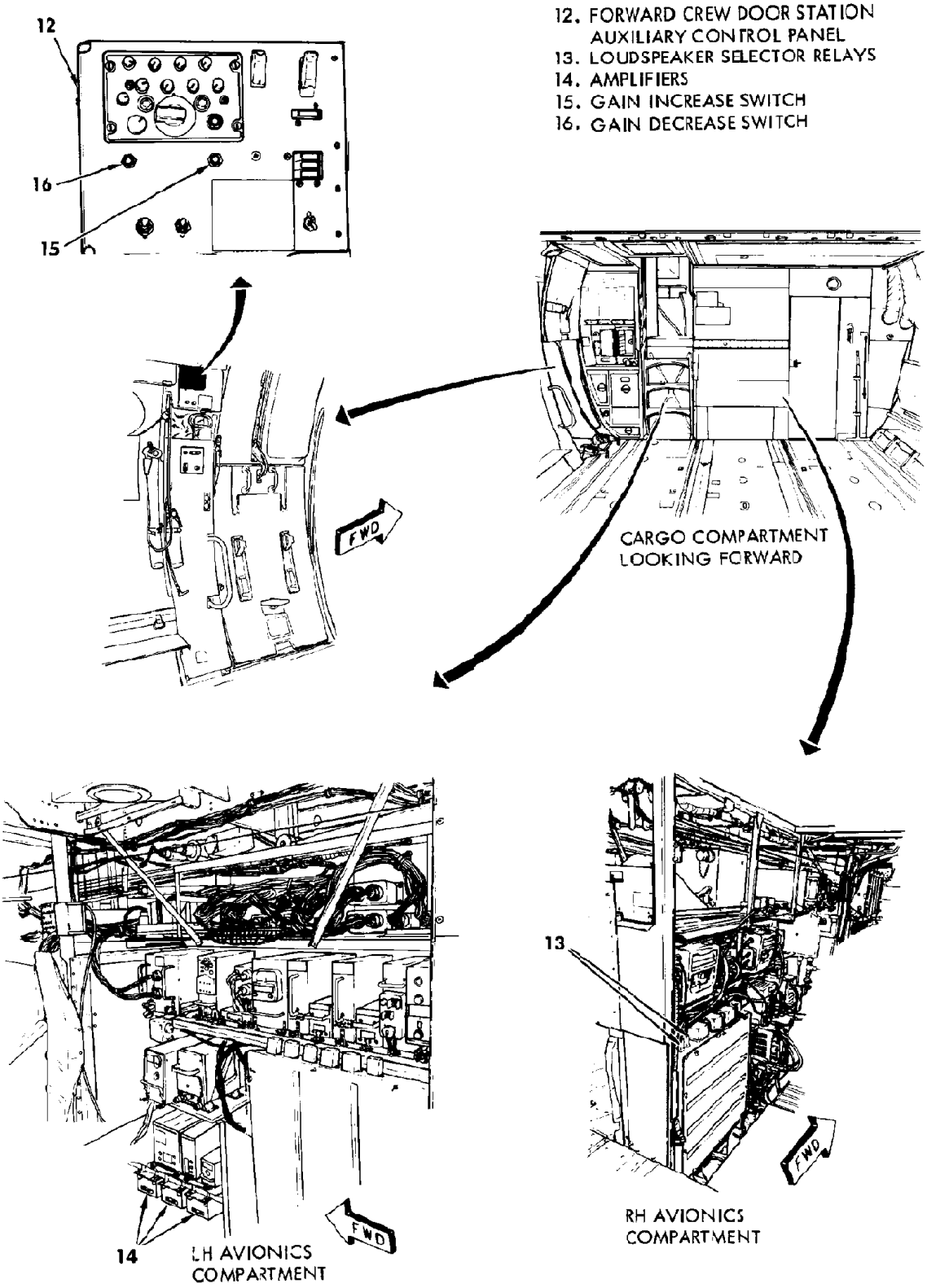

Public Address System Component Locations (Sheet 2 of 3)

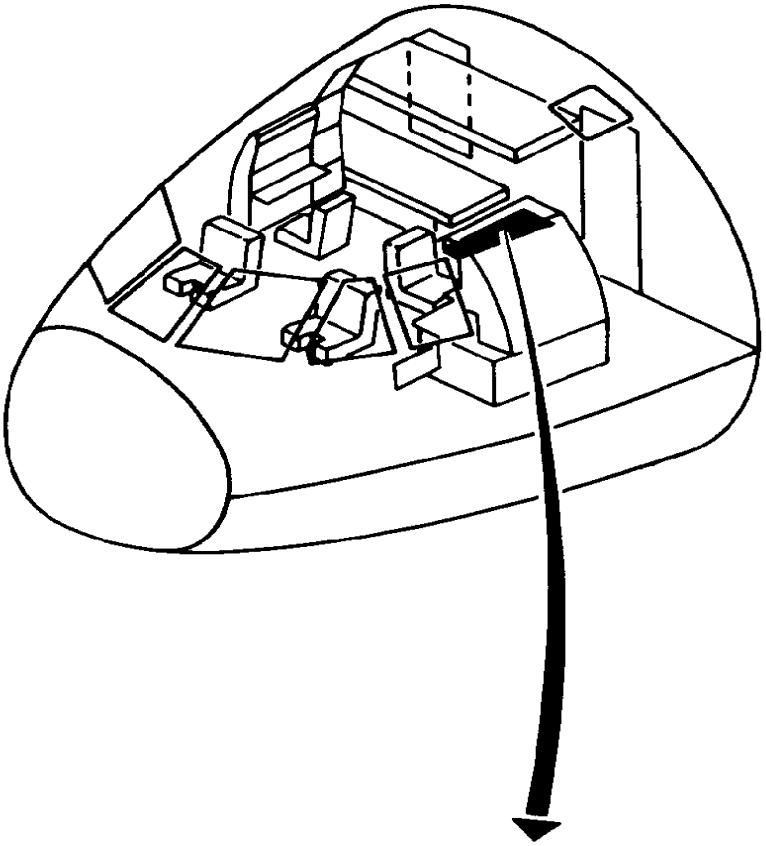

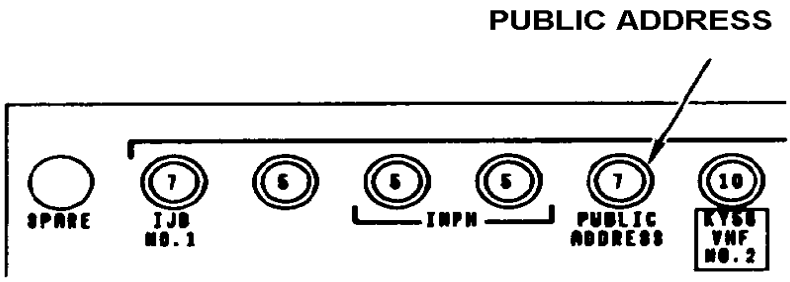

MAIN DC AVIONICS BUS NO. 2

Public Address System Component Locations (Sheet 3 of 3)

Static Discharging System

Thirty-five static dischargers located along the wing and empennage trailing edges help to prevent radio interference by dissipating accumulated static electricity into the atmosphere.

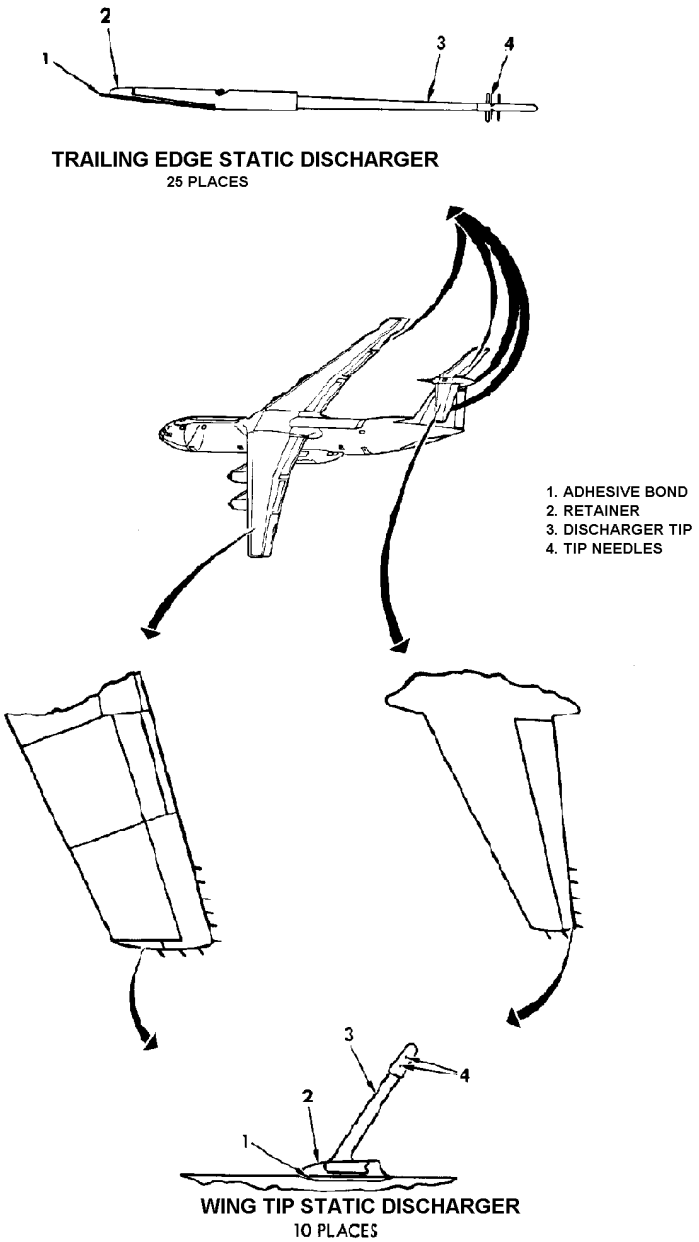

Static Discharger Locations

Joint Airborne Communication Center/Command Post (JACC/CP)

The four C-141B airplanes modified by T.O. 1C-141B-503 are AF 64-623, 65-221, 67-019, and 67-020. These airplanes are configured to accept the JACC/CP. Externally, JACC/CP antennas for HF, VHF/FM and UHF are provided separately from those used for the standard airplane communication systems. One airplane electrical power interface panel and two antenna interface panels are mounted in the airplane for use when JACC/CP equipment is installed in the cargo compartment.

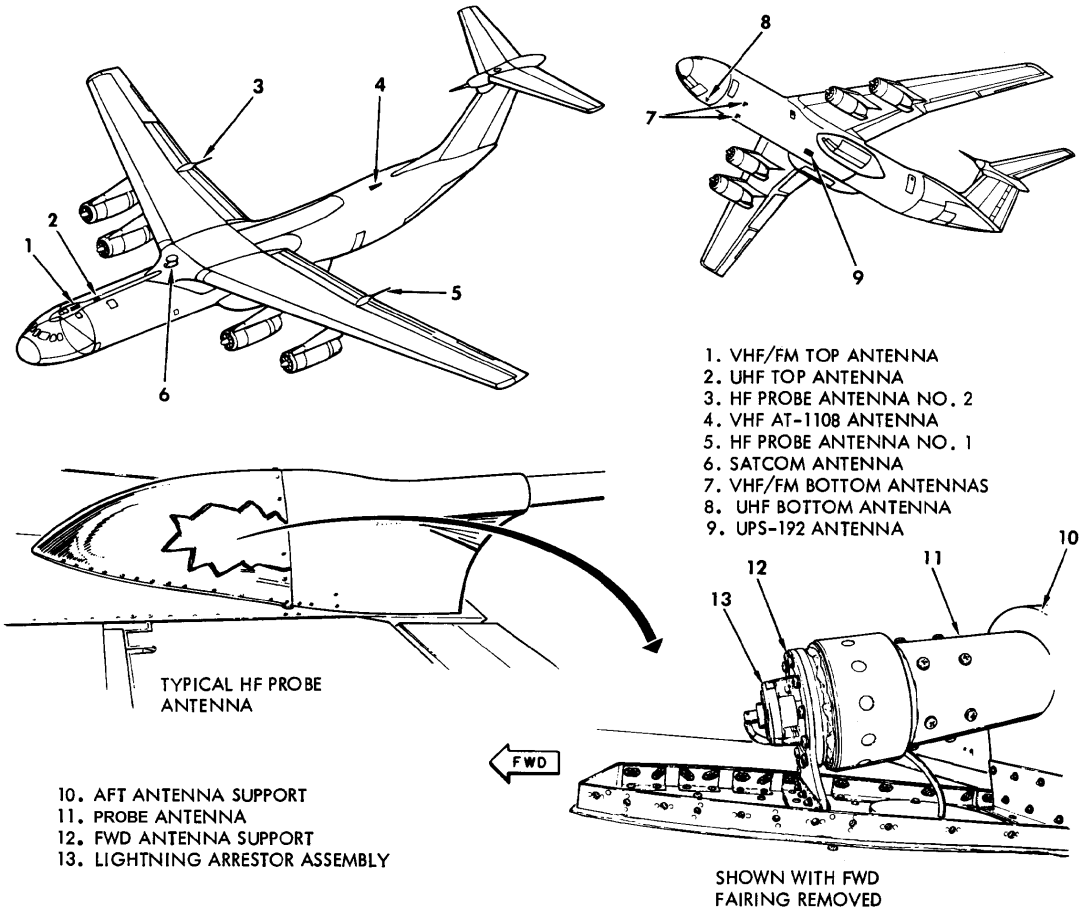

JACC/CP Component Locations (Sheet 1 of 5)

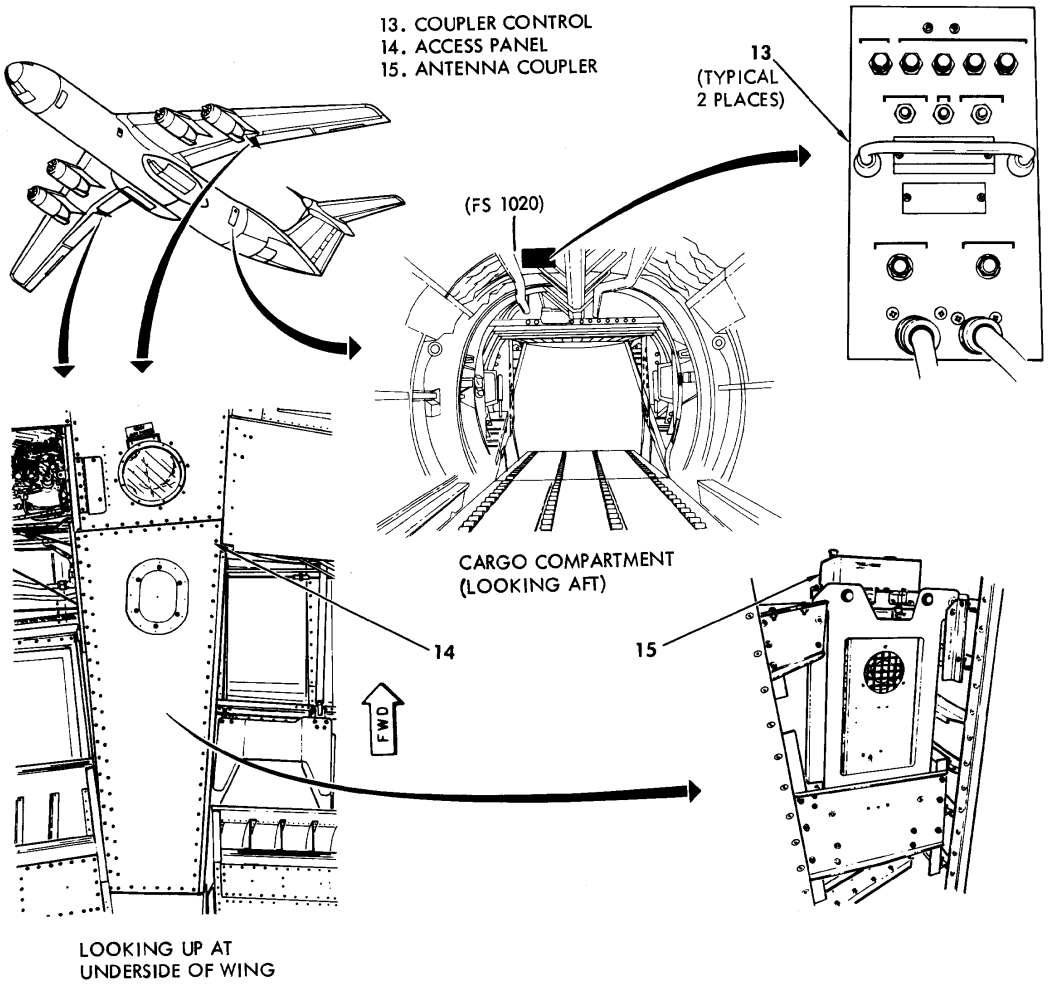

JACC/CP Component Locations (Sheet 2 of 5)

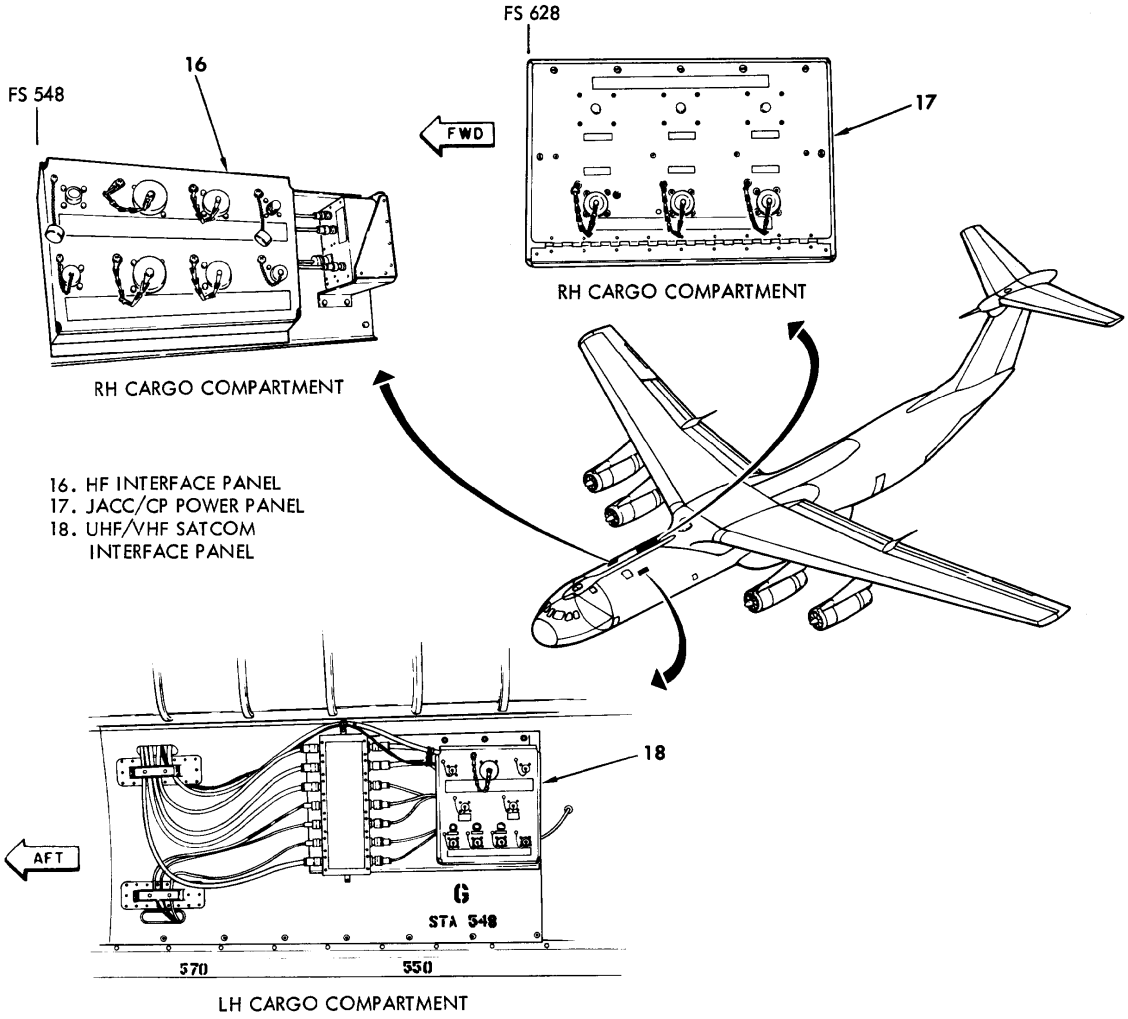

JACC/CP Component Locations (Sheet 3 of 5)

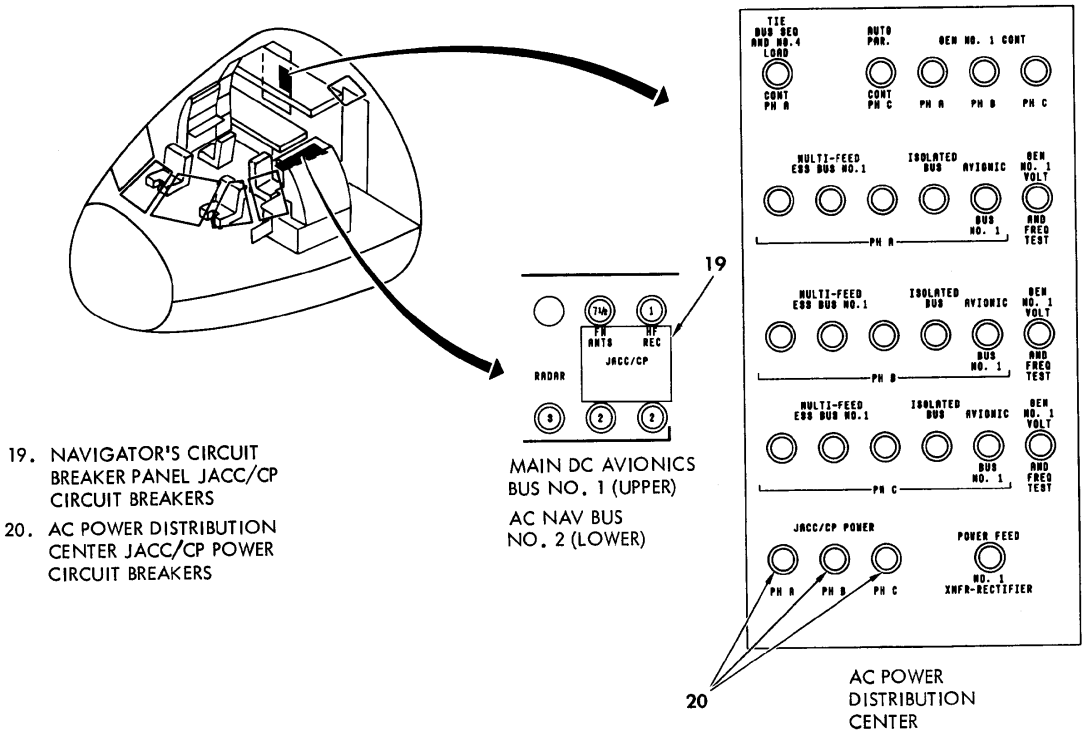

19. NAVIGATOR'S CIRCUIT BREAKER PANEL JACC/CP CIRCUIT BREAKERS
20. AC POWER DISTRIBUTION CENTER JACC/CP POWER CIRCUIT BREAKERS

JACC/CP Component Locations (Sheet 4 of 5)

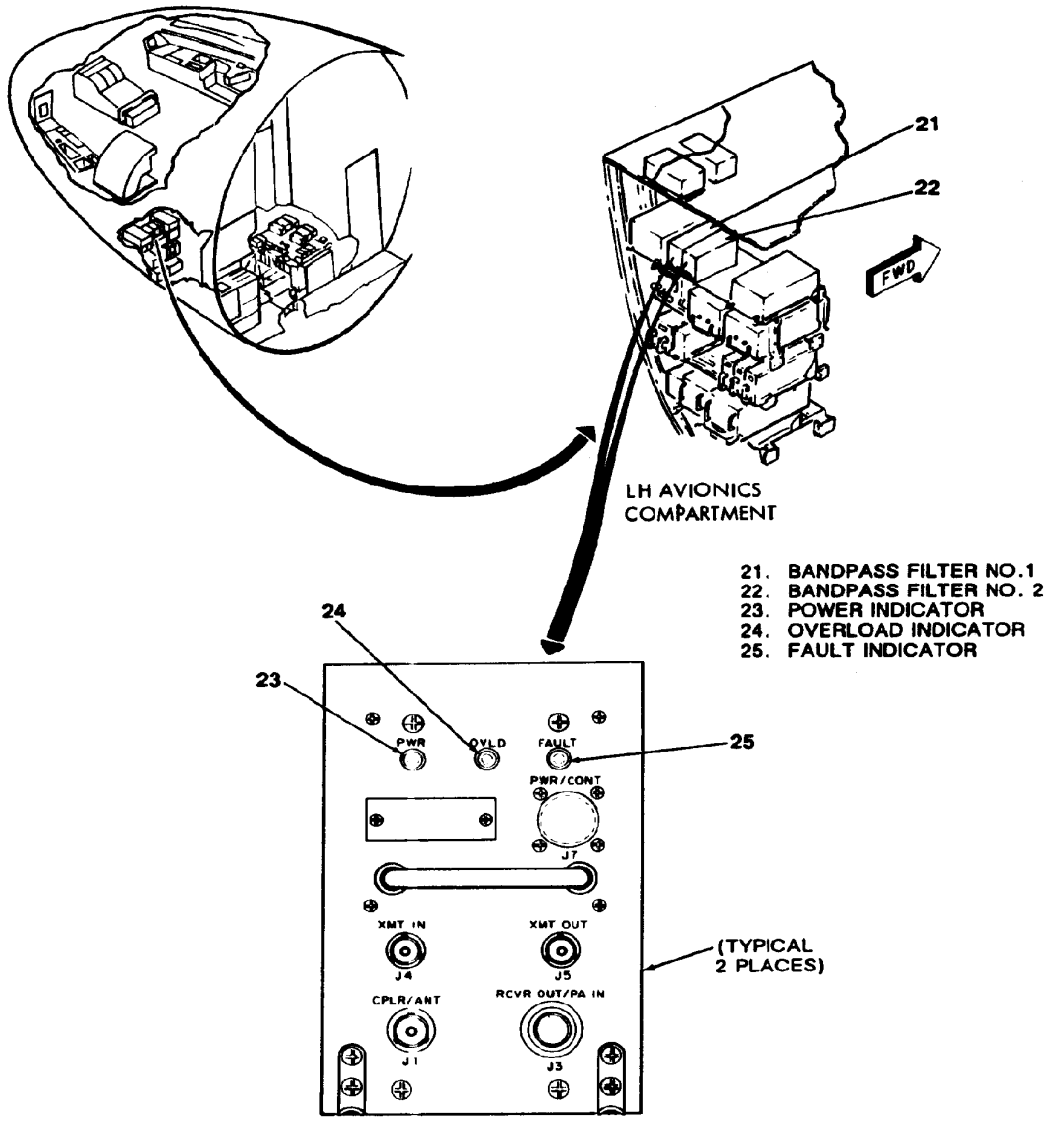

JACC/CP Component Locations (Sheet 5 of 5)

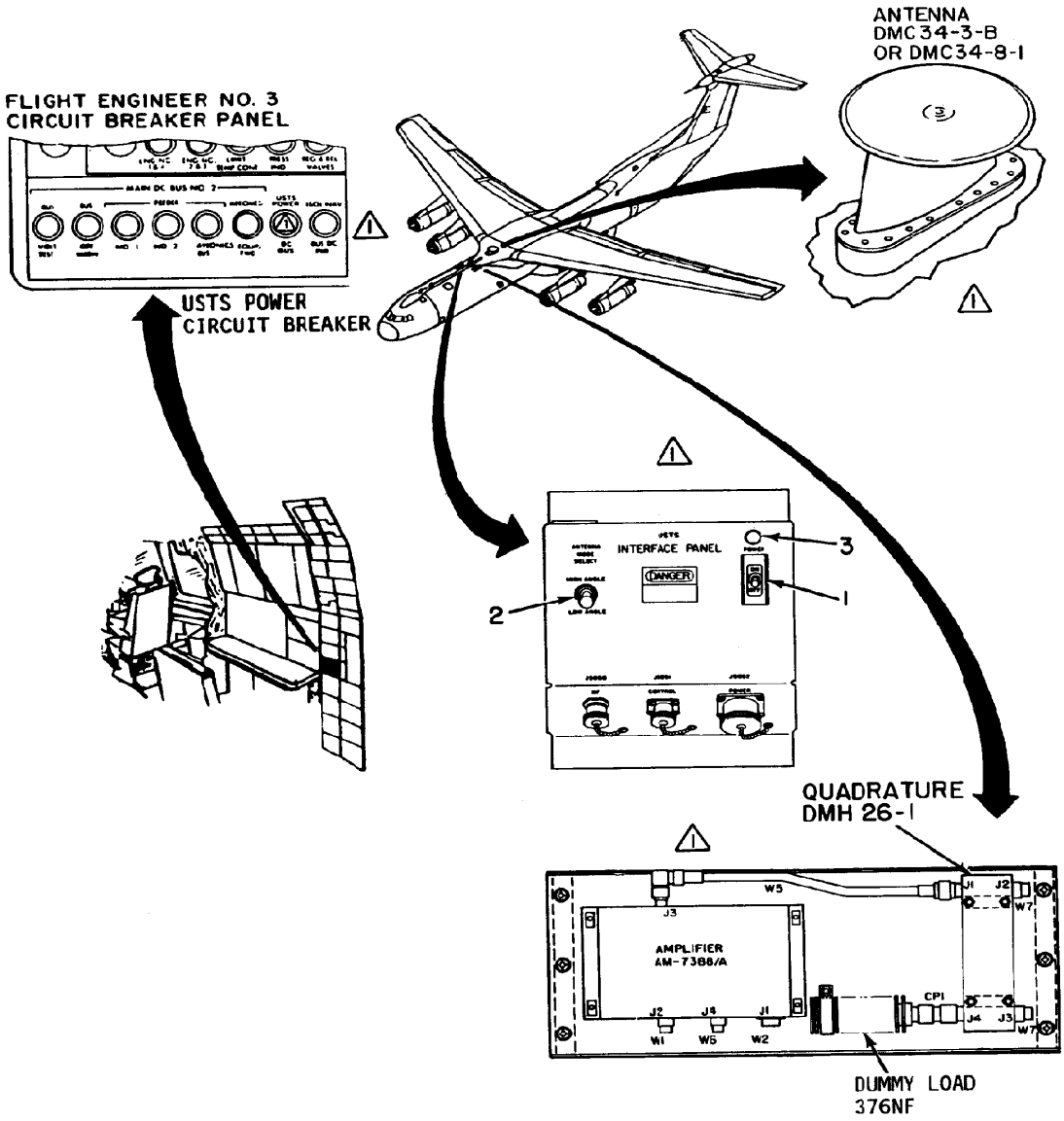

USTS Antenna Subsystem, Component Locations

ELECTRICAL SYSTEM

General Description

The electrical system includes the main generator drive system, the AC and DC generation systems, the external power system, and the emergency generation system. The overall functions and operation of these systems are described in this section. A more detailed description of each system is presented in subsequent sections of this manual.

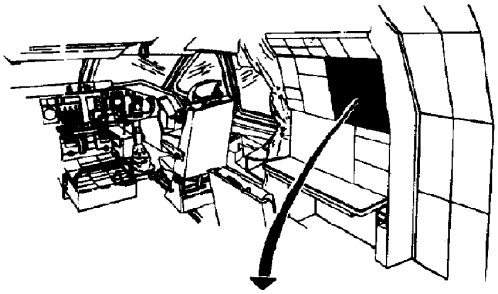

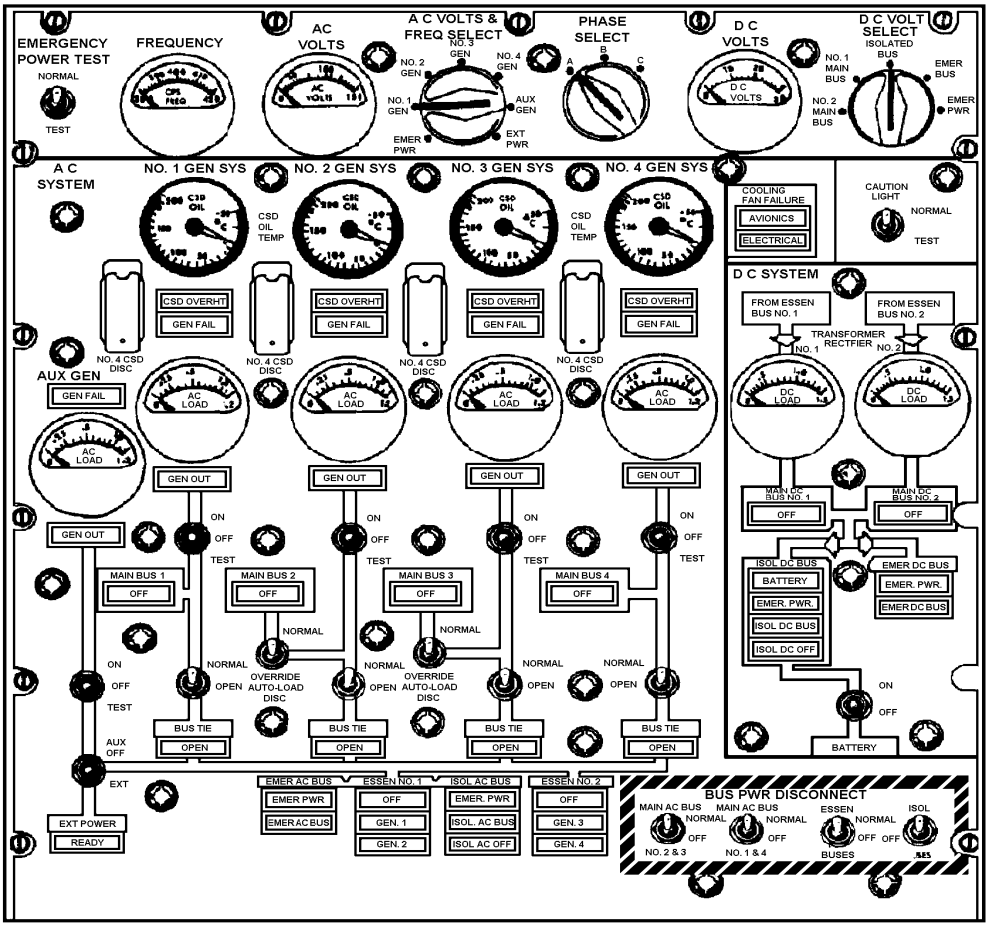

Electrical System Control Panel

Generator Drive System

Three-phase, 200/115-VAC, 400-Hz power is supplied by four engine-driven generators. Each generator attaches to a constant speed drive (CSD). Two interchangeable types of CSDs are used on the C-141B. One type is made by General Electric (G.E.) while the second type is made by Sundstrand. The CSDs mount on the engine accessory drive cases. The CSD is a hydraulic differential transmission. It is driven at variable speeds but delivers a constant output speed. With input speeds of 4100 to 8500 rpm, the output is 6000 +/- 60 rpm. When the generator is driven at 6000 rpm, its output frequency will be 400 +/- 5 Hz. Along with the CSD, the generator drive subsystem includes the oil supply, an oil tank and pressure regulator, an air-oil cooler, a temperature regulating pressure bypass valve, and a load controller.

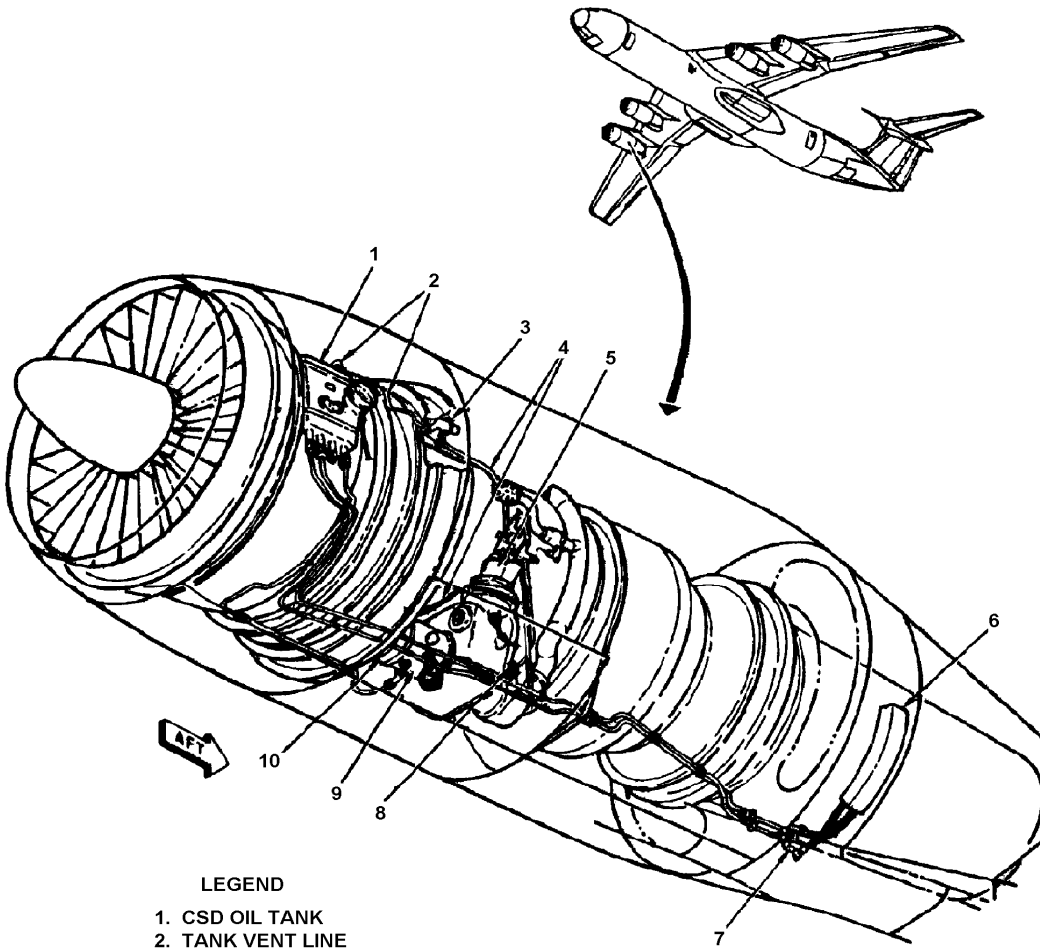

LEGEND

1. CSD OIL TANK
2. TANK VENT LINE
3. CSD OIL PRESSUER REGULATOR
4. CSD VENT LINE
5. THRUST REVERSER PUMP
6. CSD OIL COOLER
7. CSD OIL TEMPERATURE CONTROL
8. CSD OIL TEMPERATURE BULB
9. CSD
10. GENERATOR

CSD System Component Locations

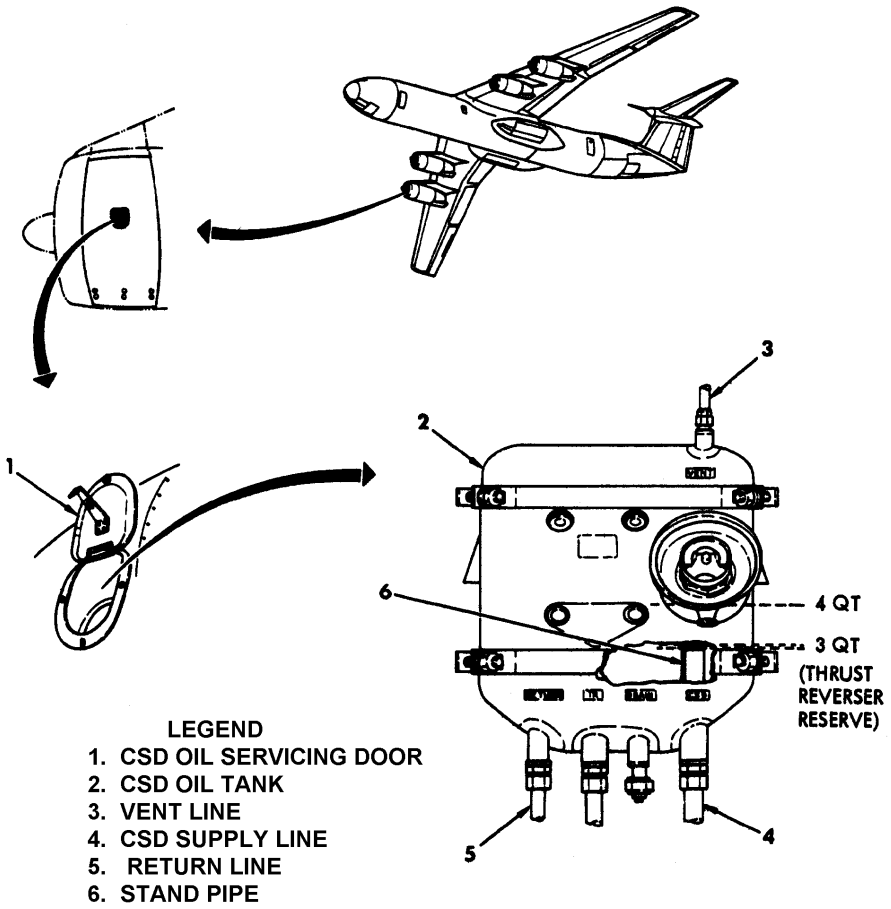

CSD Oil Supply Component Locations

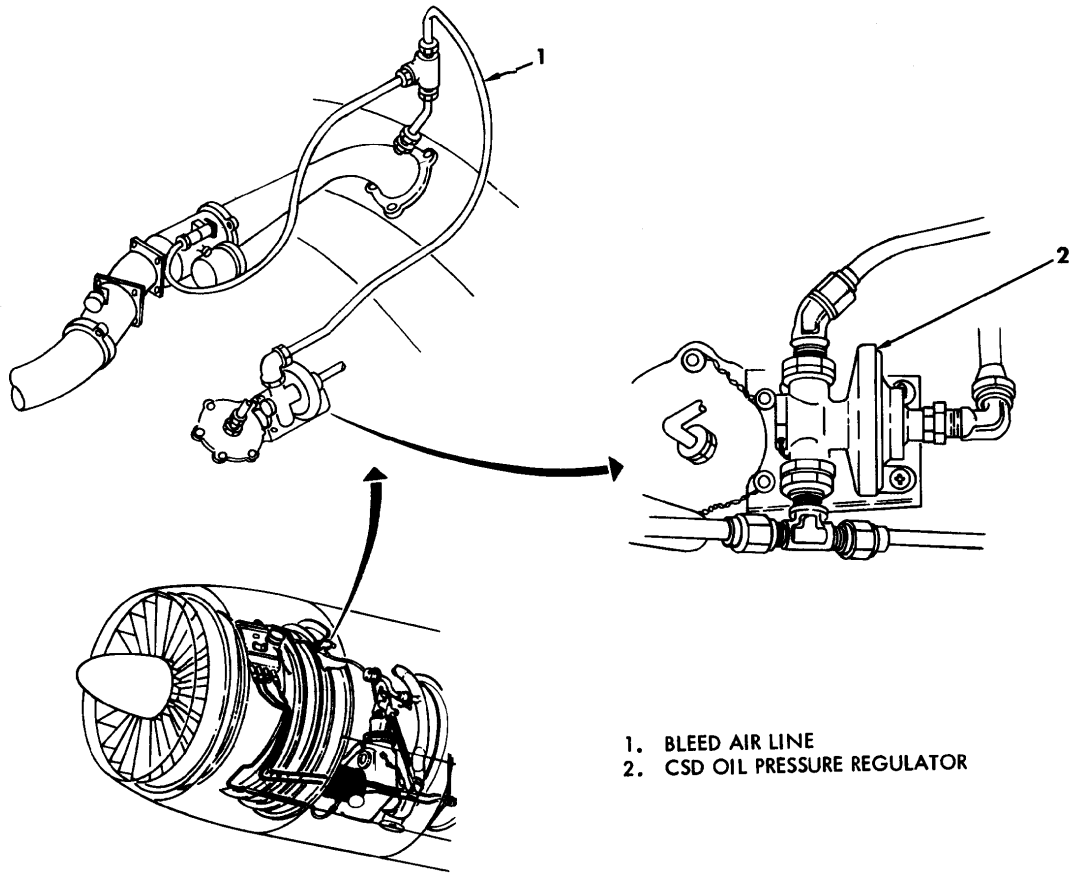

CSD Oil Pressure Regulator Location

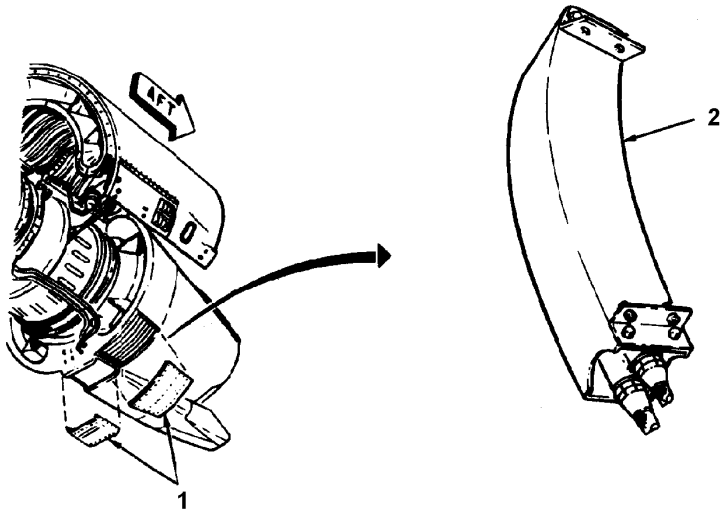

1. ACCESS PANELS
2. CSD OIL COOLER
3. CSD OIL TEMPERATURE CONTROL AND PRESSURE BYPASS VALVE

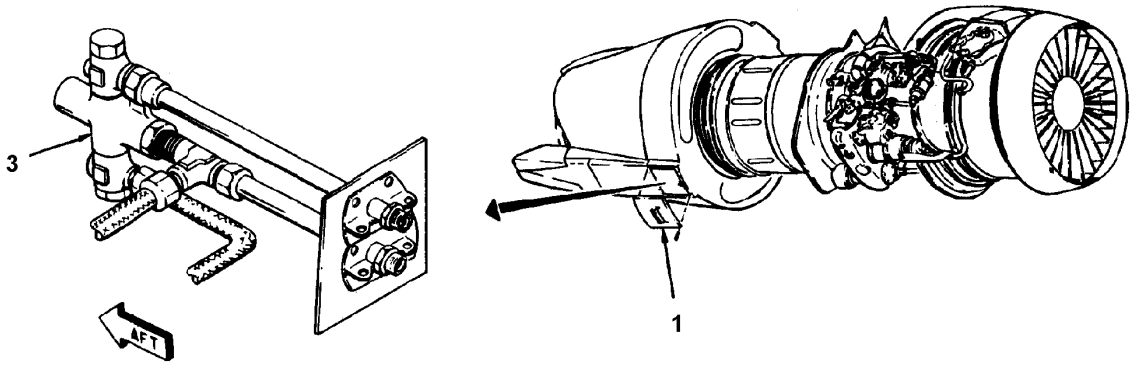

CSD Oil Temperature Control & Pressure Bypass Valve Location

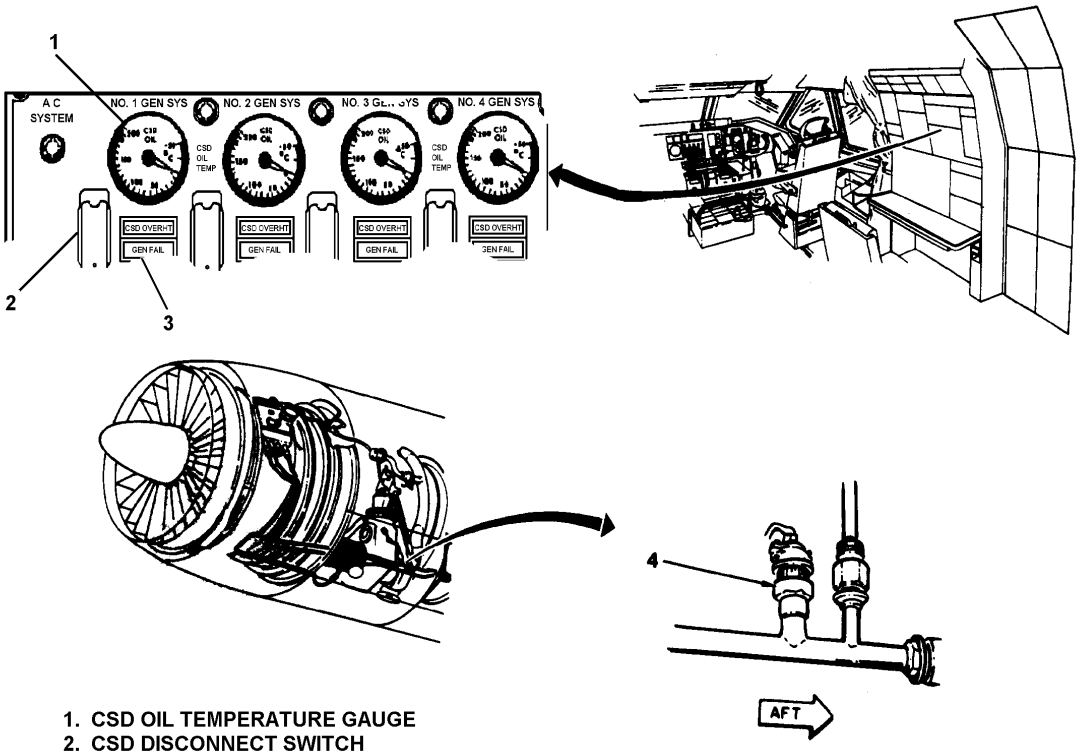

1. CSD OIL TEMPERATURE GAUGE
2. CSD DISCONNECT SWITCH
3. CSD OVERHEAT WARNING LIGHT
4. CSD OIL TEMPERATURE BULB

CSD Oil Temperature Indicating System Components Location

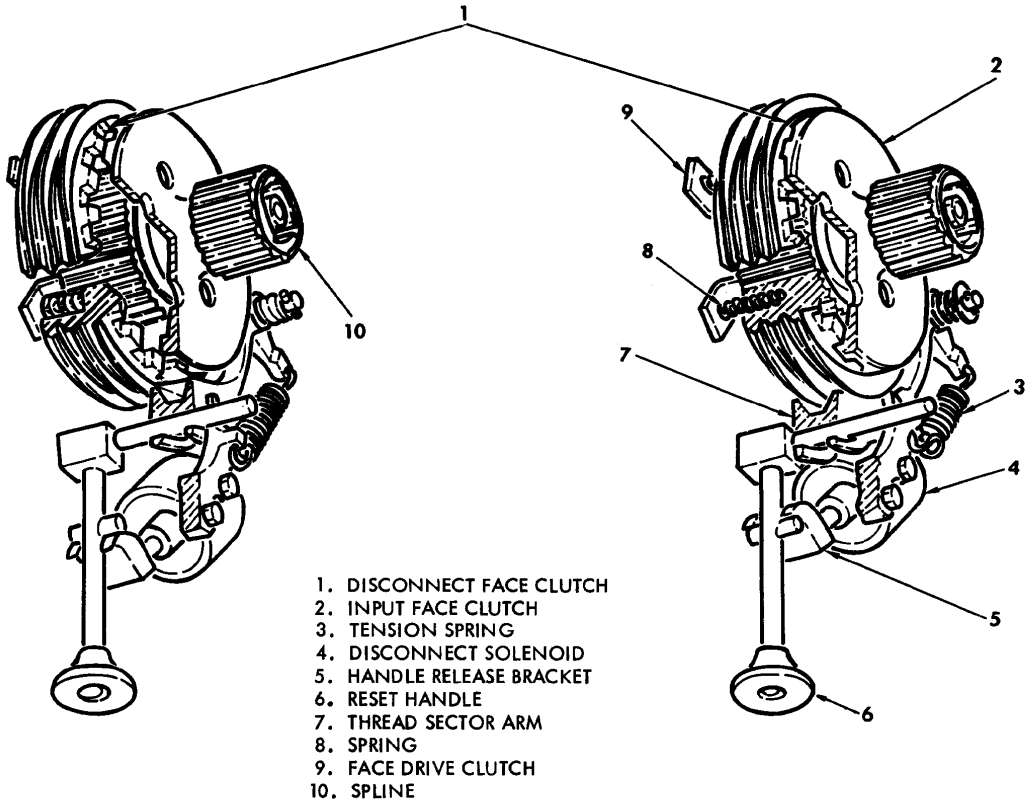

CSD Input Shaft Disconnect and Reset Components (G.E.)

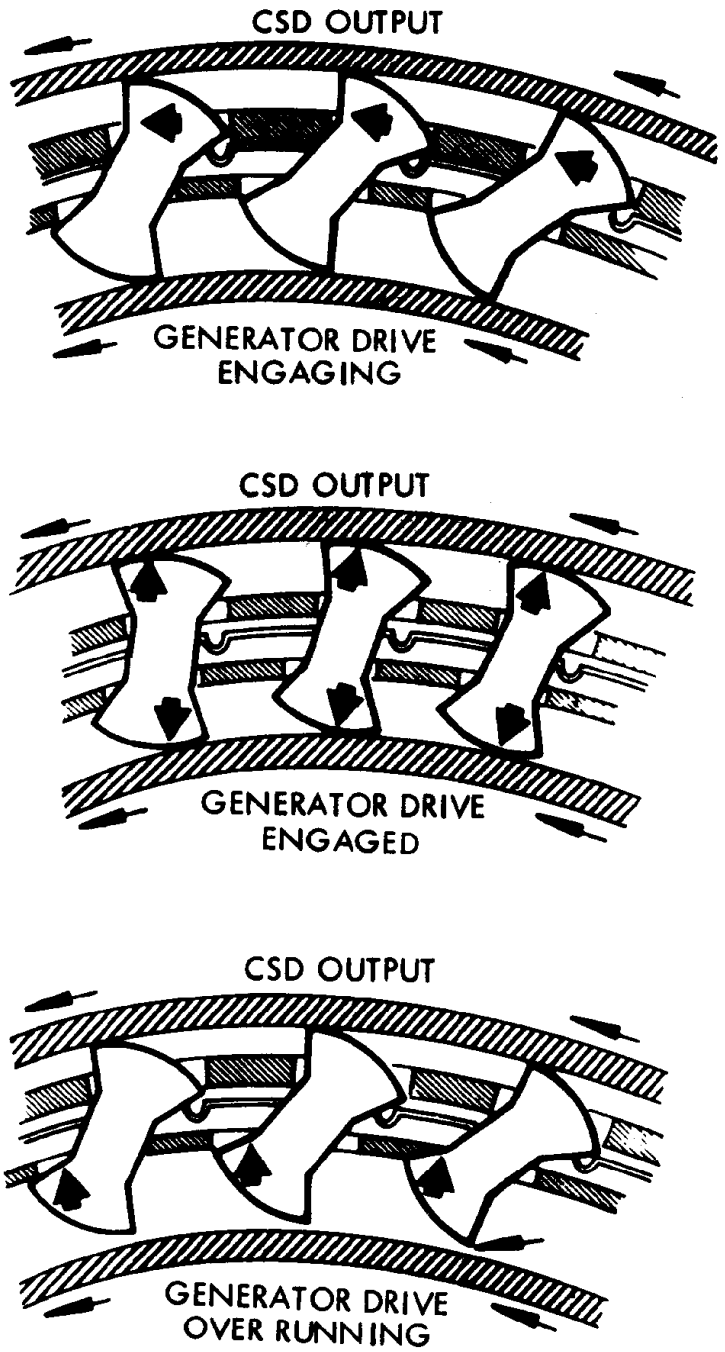

CSD Sprag Clutch Operation (G.E.)

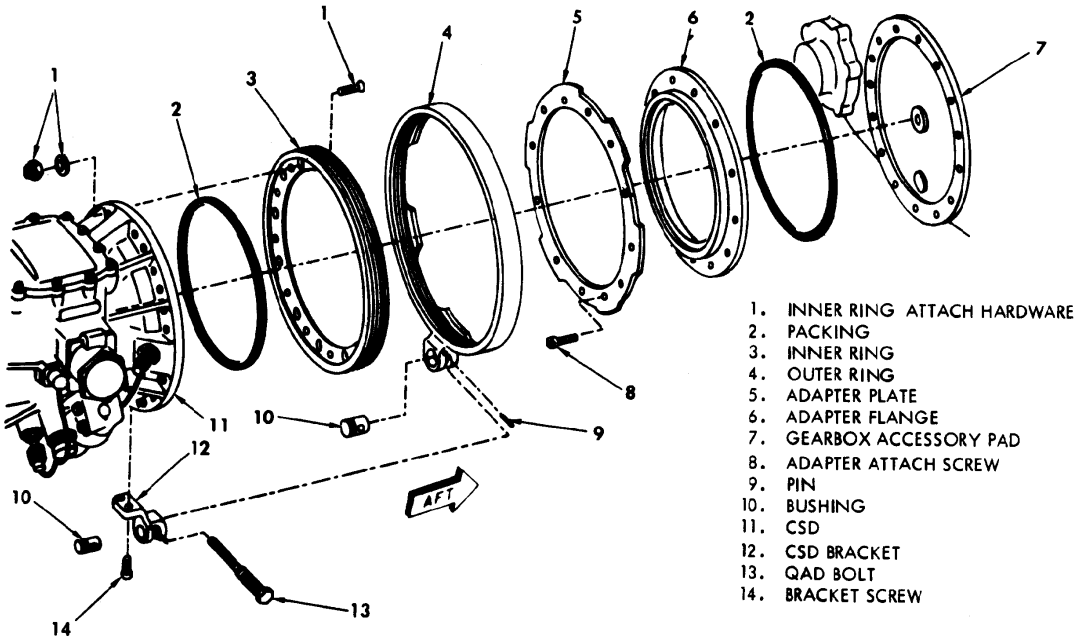

CSD Quick Attach-Detach Unit

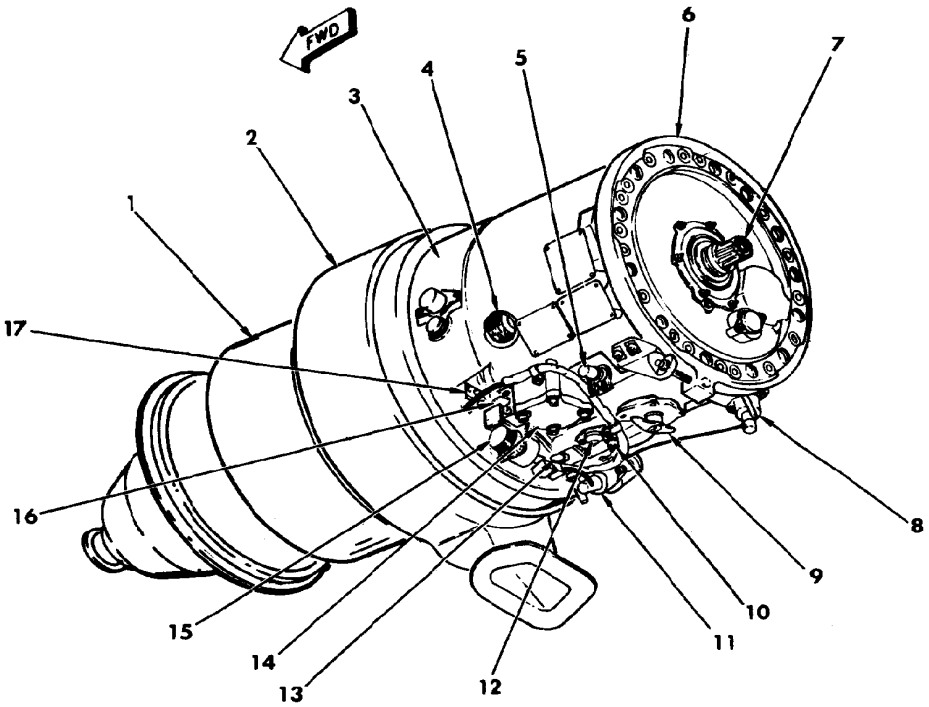

1. GENERATOR (REF)
2. COOLING SHROUD (REF)
3. CSD
4. OIL OUTLET PORT
5. DISCONNECT SOLENOID CONNECTOR
6. QAD
7. DRIVE SHAFT
8. CHARGE PRESSURE SWITCH
9. DISCONNECT RESET HANDLE
10. MAGNETIC DRAIN PLUG
11. UNDERSPEED PRESSURE SWITCH
12. GOVERNOR ADJUSTMENT
13. OIL INLET PORT
14. FILTER CAP
15. ELECTRICAL CONNECTOR
16. TEMPERATURE SWITCH
17. GOVERNOR TRIM CONNECTOR

CSD Component Locations (Sundstrand)

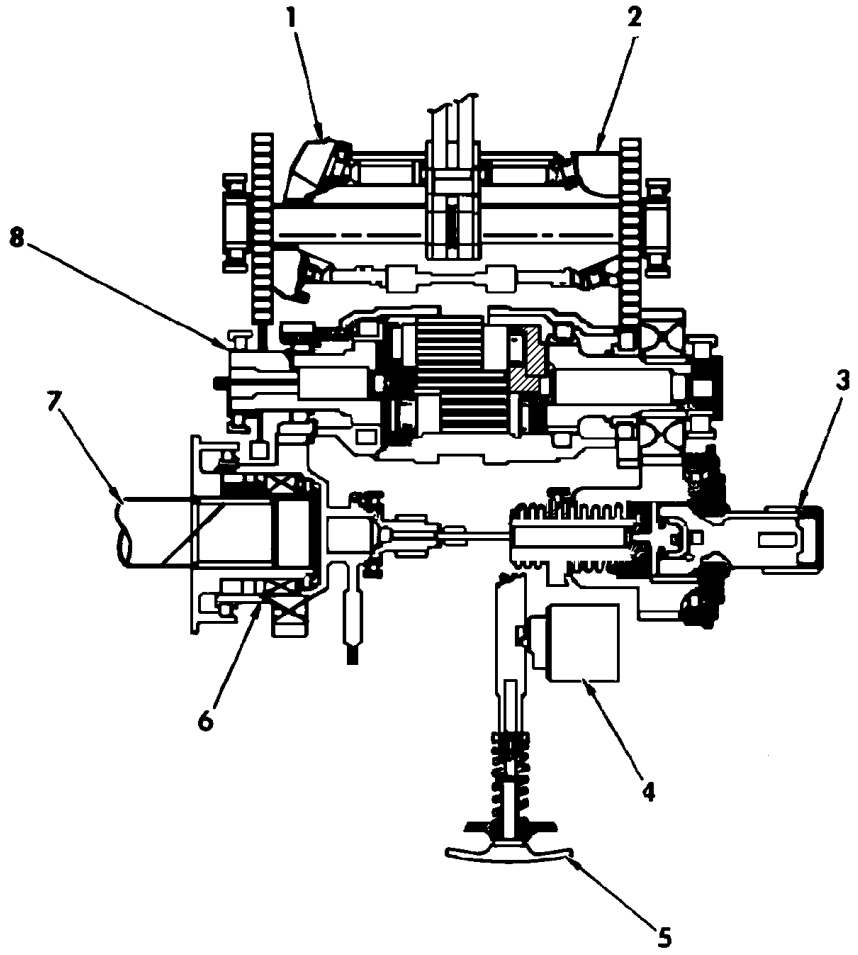

1. VARIABLE HYDRAULIC UNIT
2. FIXED HYDRAULIC UNIT
3. INPUT SHAFT
4. DISCONNECT SOLENOID
5. RESET HANDLE
6. OVERRUNNING CLUTCH
7. OUTPUT SHAFT
8. PLANETARY DIFFERENTIAL

CSD Cross-Section (Sundstrand)

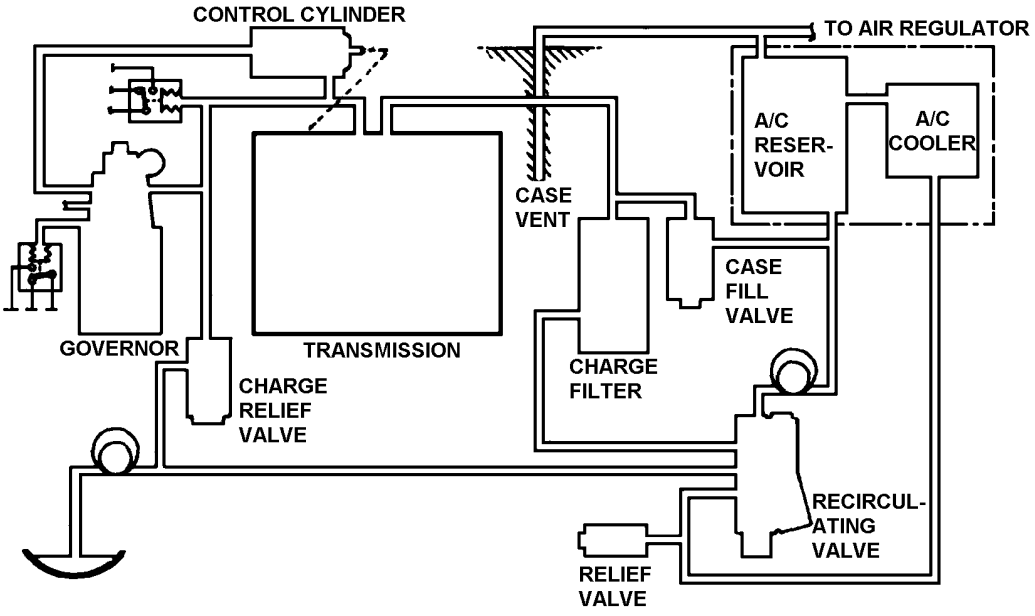

CSD Hydraulic Schematic Diagram (Sundstrand)

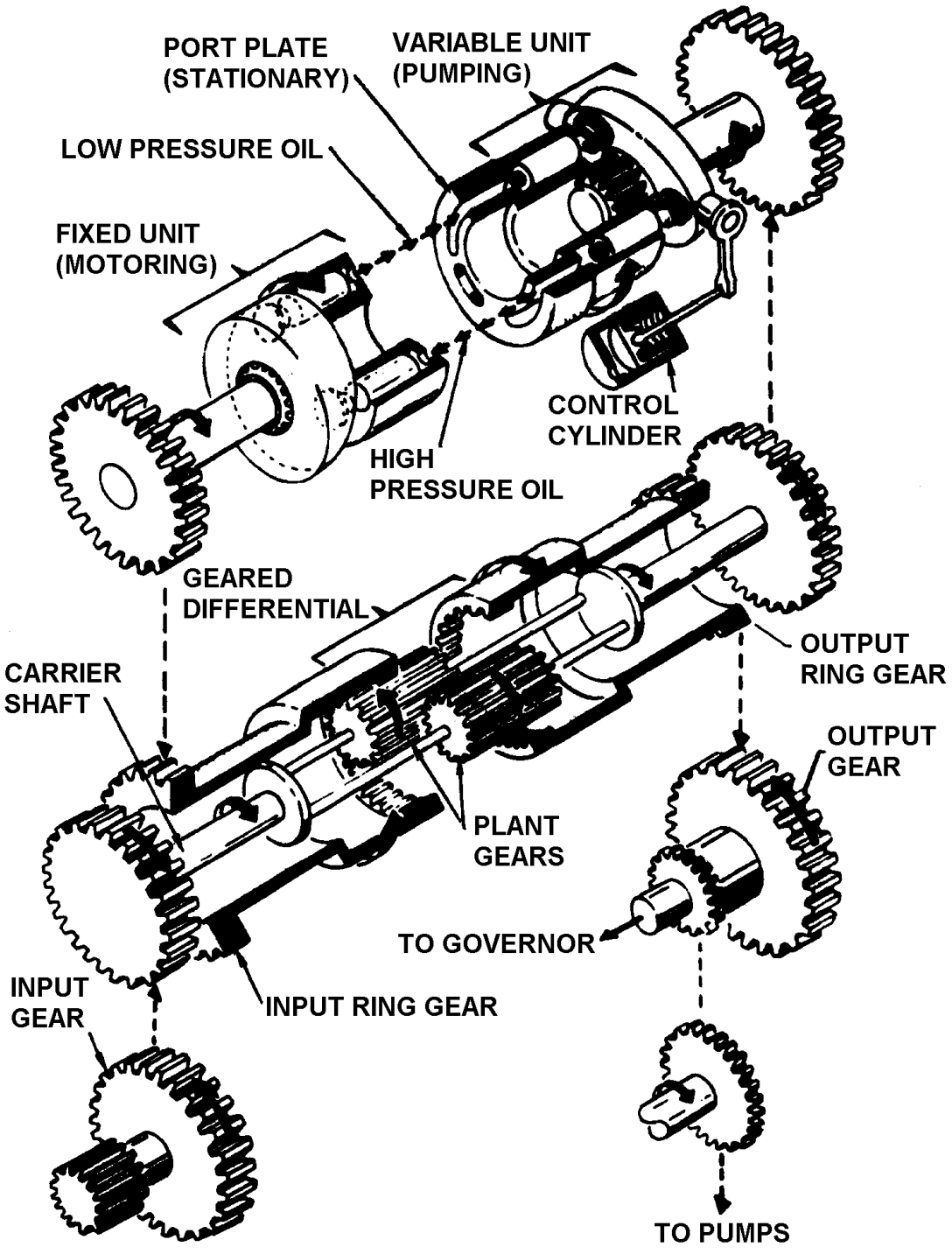

CSD Operation, Step-up Ratio (Sundstrand)

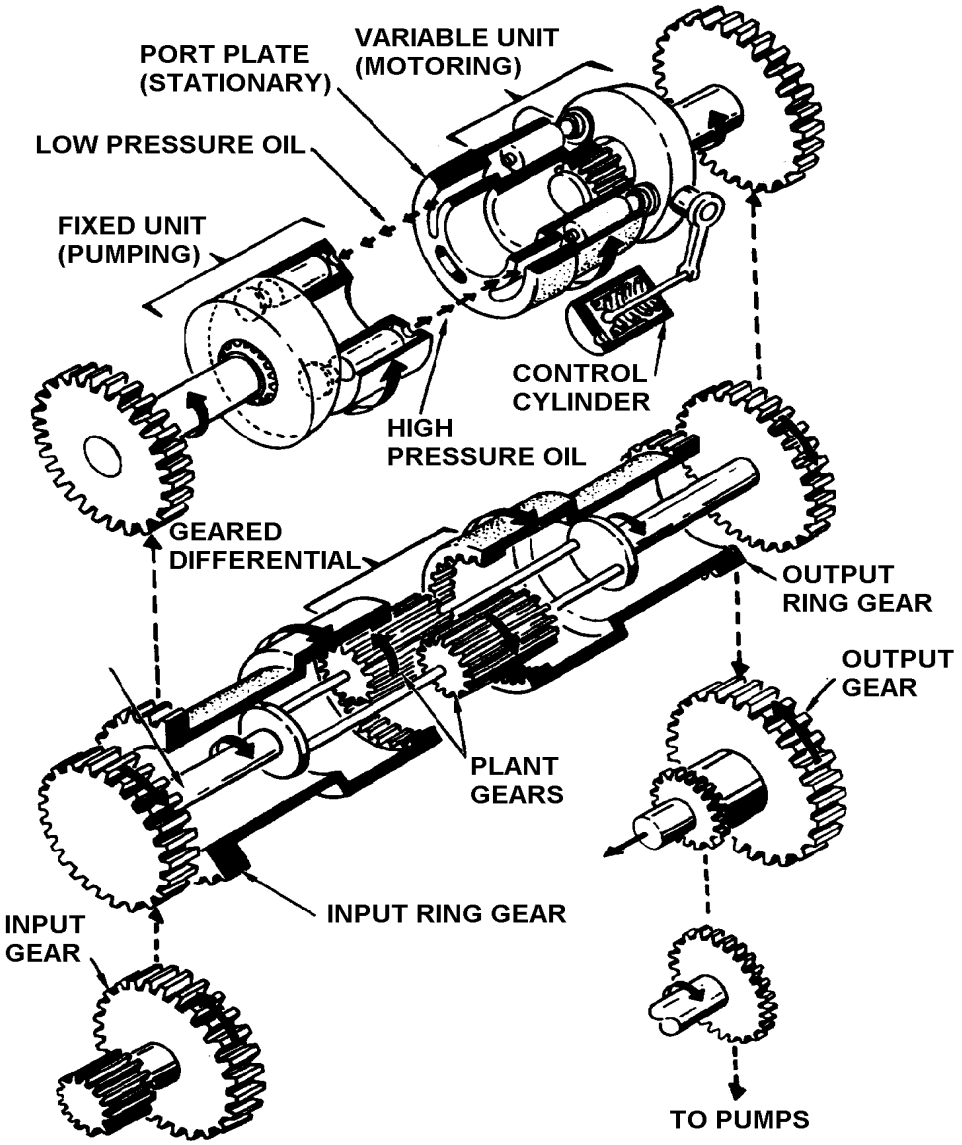

CSD Operation, Step-Down Ratio (Sundstrand)

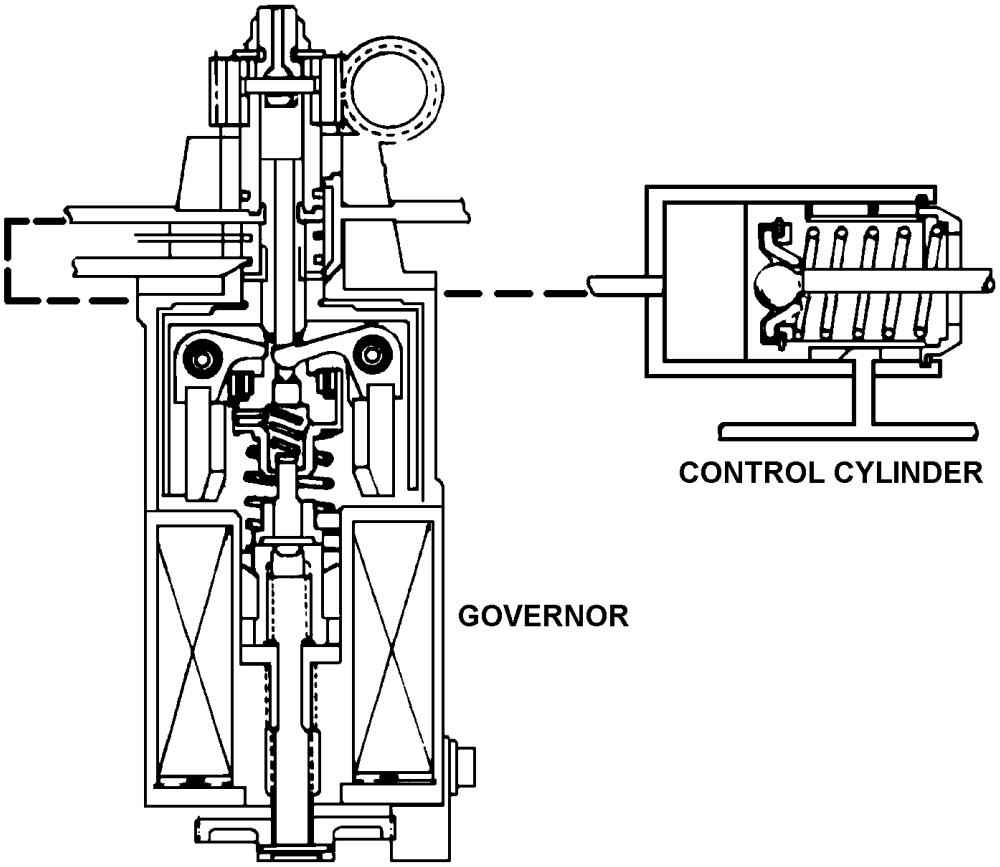

CSD Governor and Control Cylinder (Sundstrand)

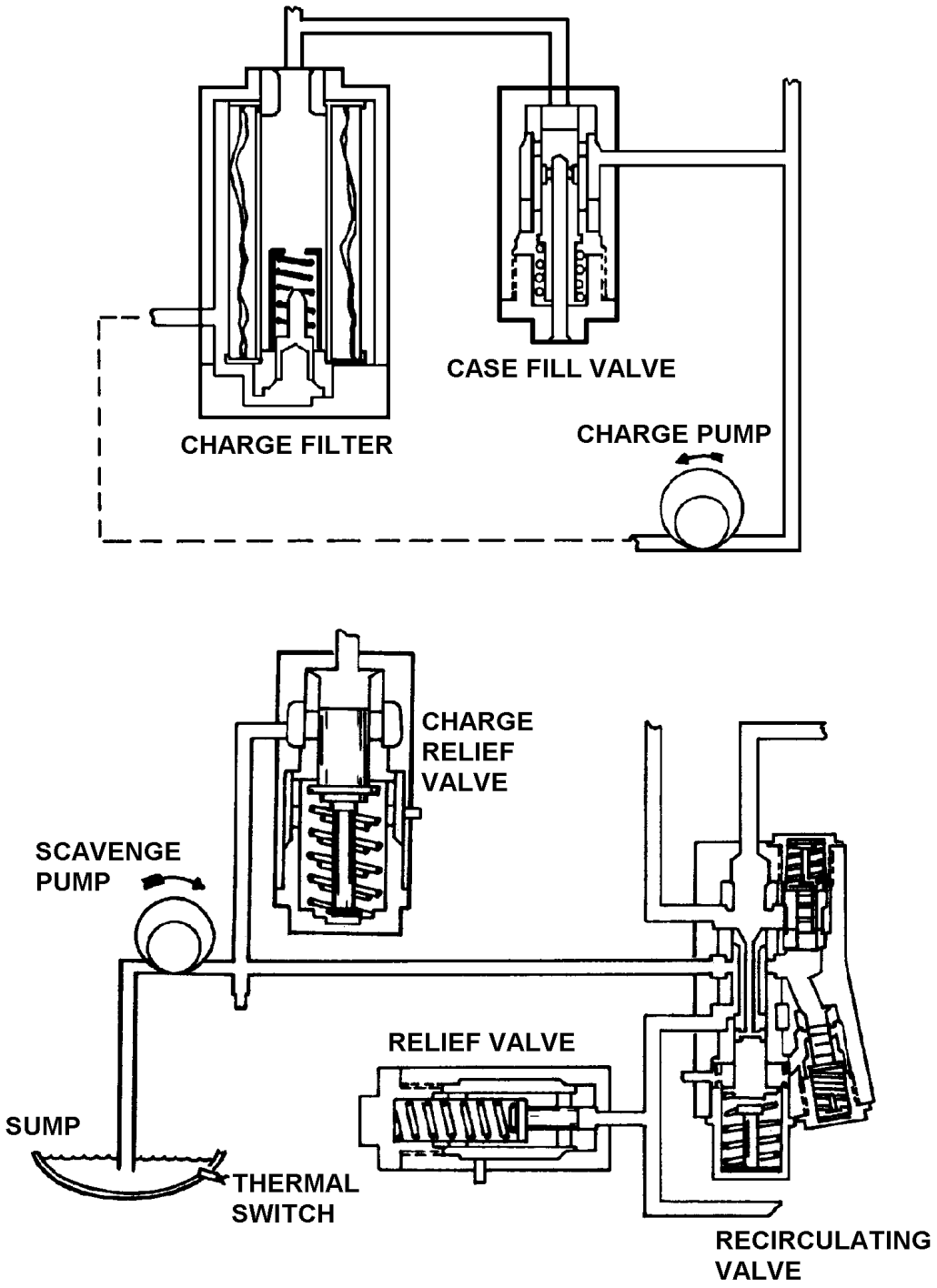

CSD Charge Filter and Relief Valves (Sundstrand)

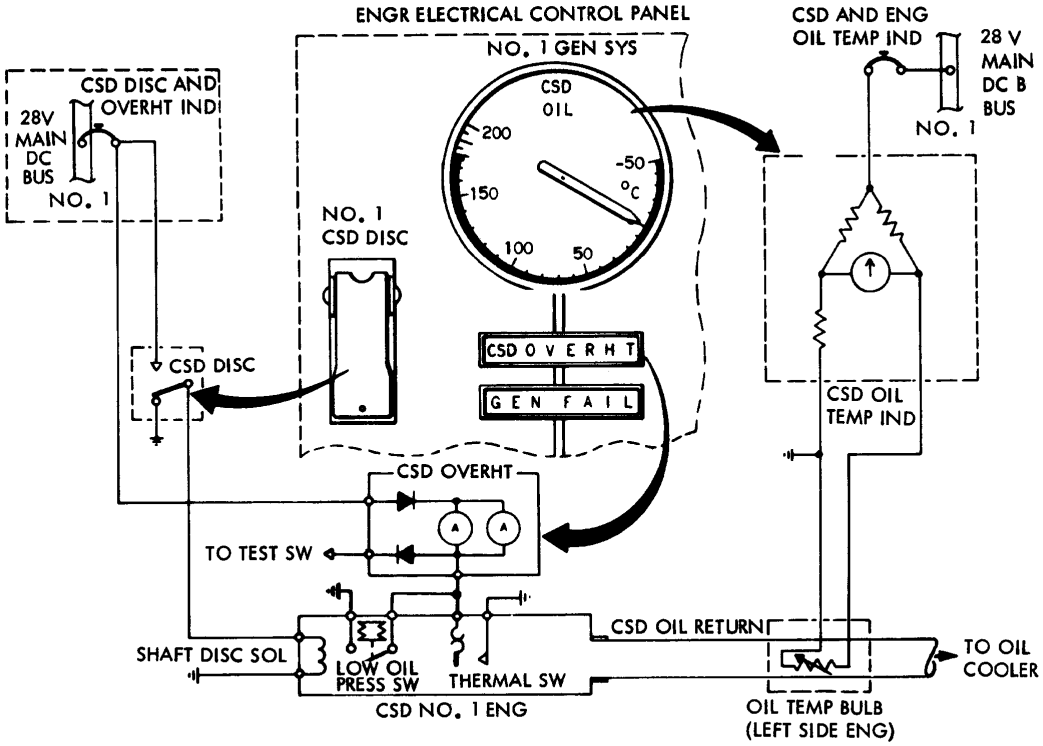

NOTE

NO. 1 CSD SHOWN
OTHERS SIMILAR

CSD Pressure and Temperature Schematic Diagram

Alternating Current (AC) Generation System

Three-phase, 200/115-volt, 400-Hz AC power is supplied by four engine-driven generators. Each generator is connected to an engine by a CSD unit. During ground operations, AC power is supplied from one of two sources: an auxiliary power unit (APU) driven generator or an external power source. During inflight emergencies, AC power is automatically supplied from a 2-KVA, hydraulically-driven emergency generator. The four engine generators, the APU generator, and external power are controlled from the flight engineer's electrical control panel. Emergency generator operation is normally automatic, but can be controlled from the pilot's instrument panel. Emergency generator operation is monitored at the flight engineer's panel. Five voltage regulators, five generator protection panels, four load controllers, and a bus protection panel provide control and protection for the AC system.

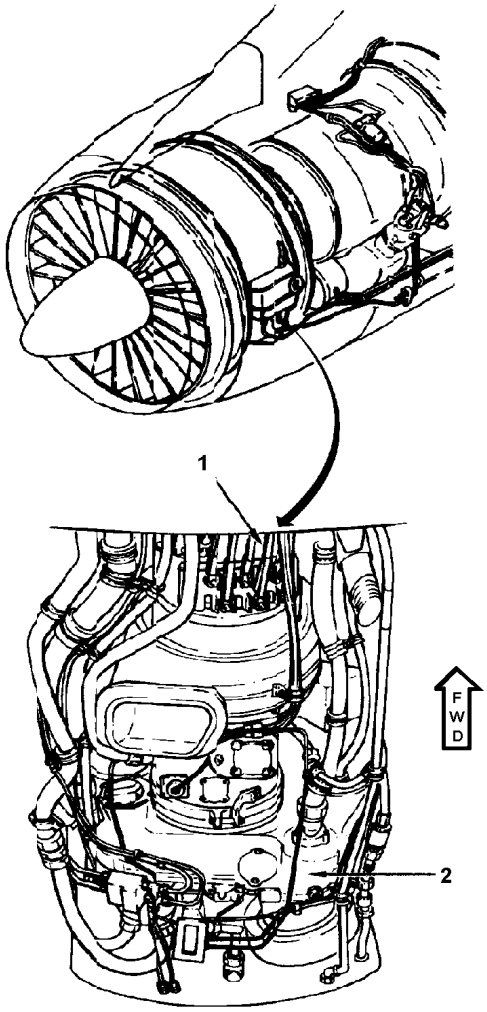

(LOOKING UP)

1. MAIN GENERATOR
2. CONSTANT SPEED DRIVE UNIT

Engine-Driven Generator

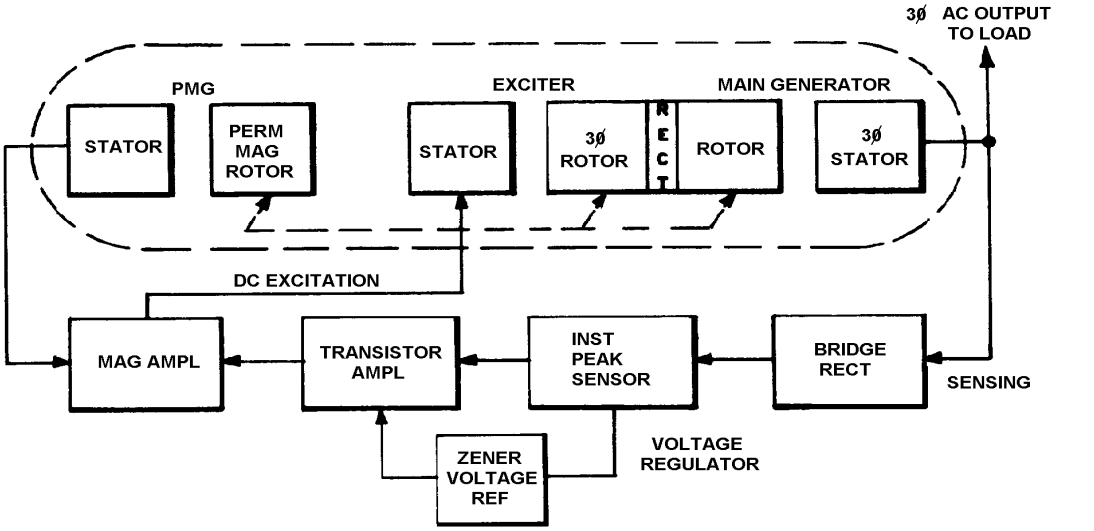

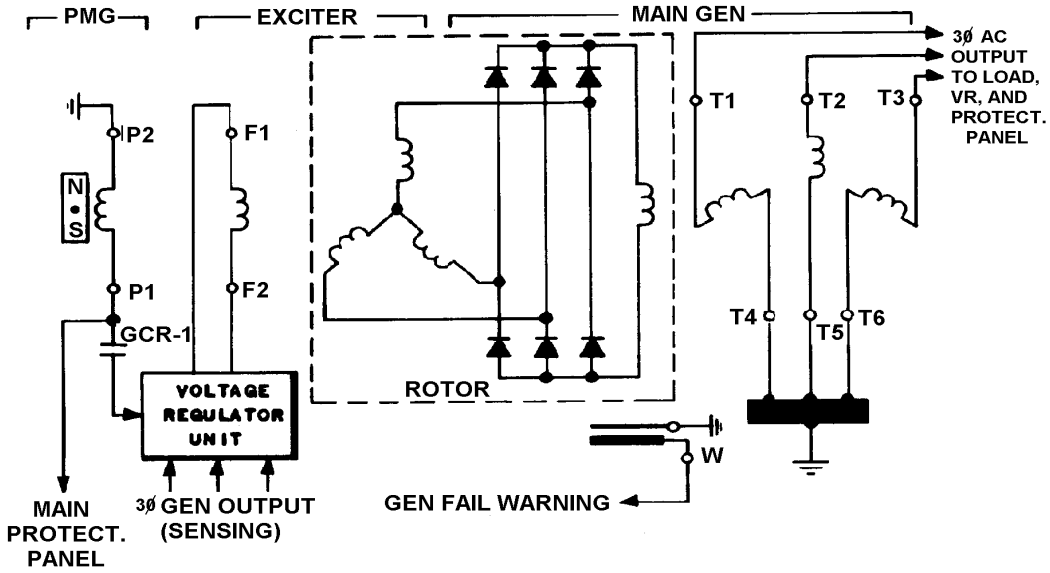

Generator and Regulator Block Diagram & Schematic Diagram

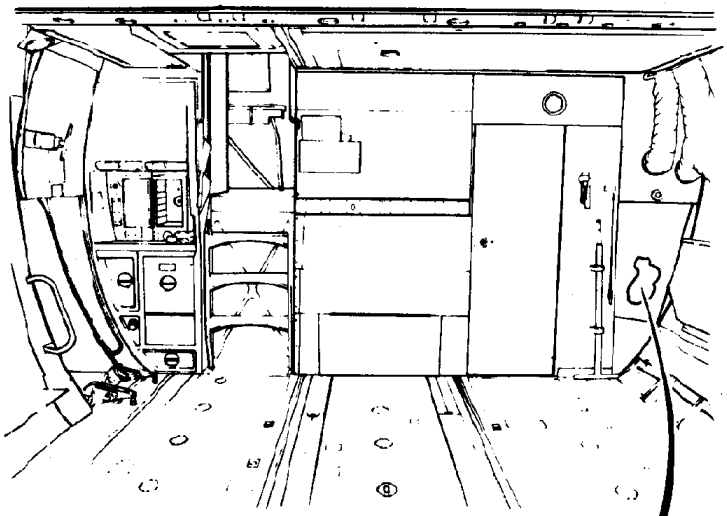

(CARGO COMPARTMENT, LOOKING FWD)

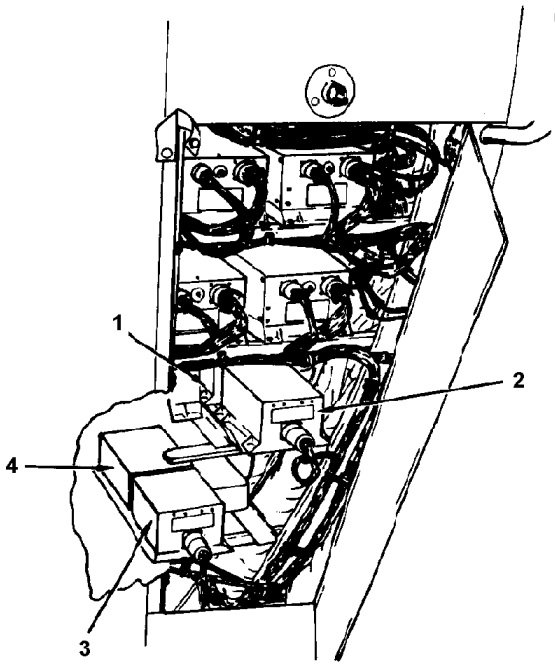

1. LOAD CONTROLLER NO. 3
2. LOAD CONTROLLER NO. 4
3. LOAD CONTROLLER NO. 2
4. LOAD CONTROLLER NO. 1

CSD Load Controller Locations

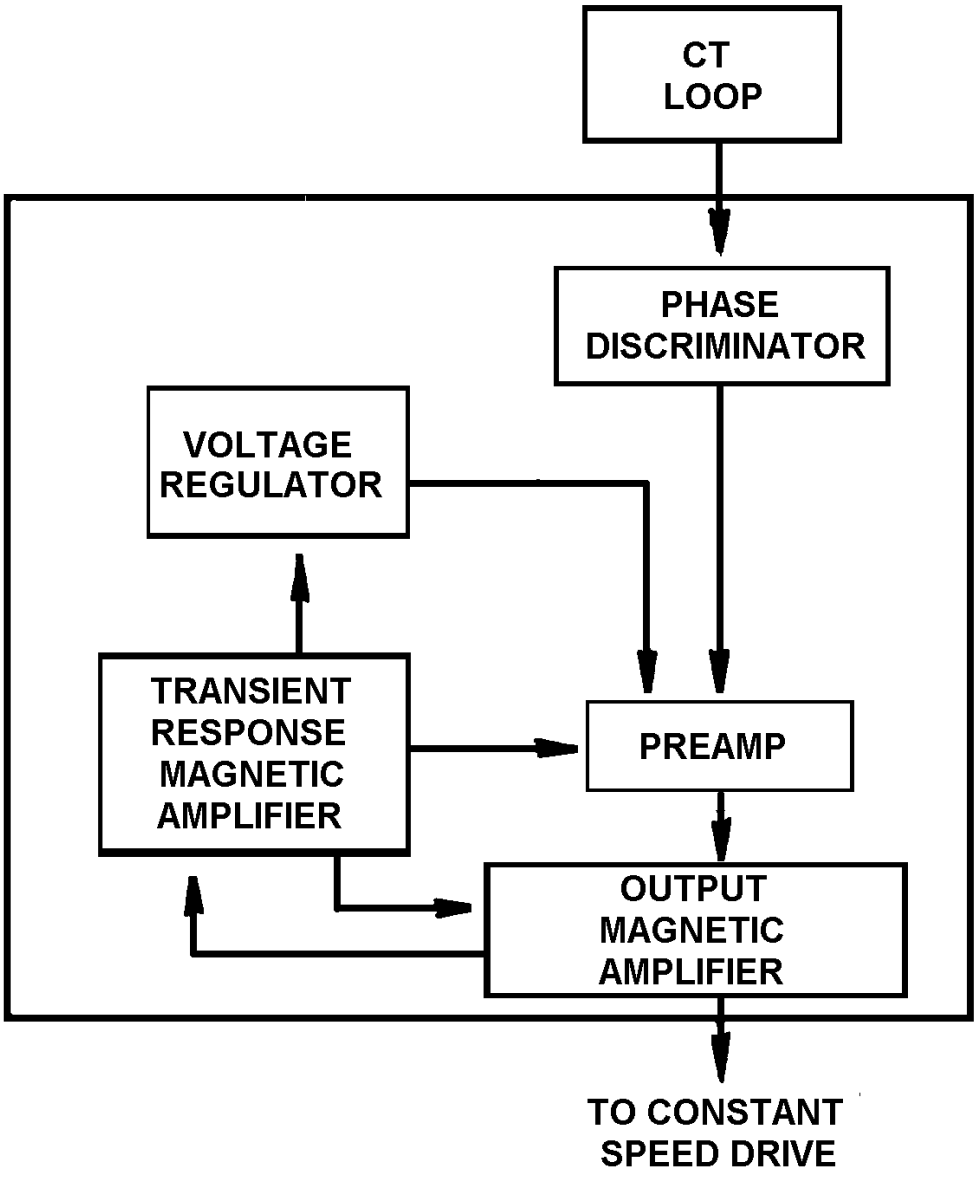

Load Controller Block Diagram

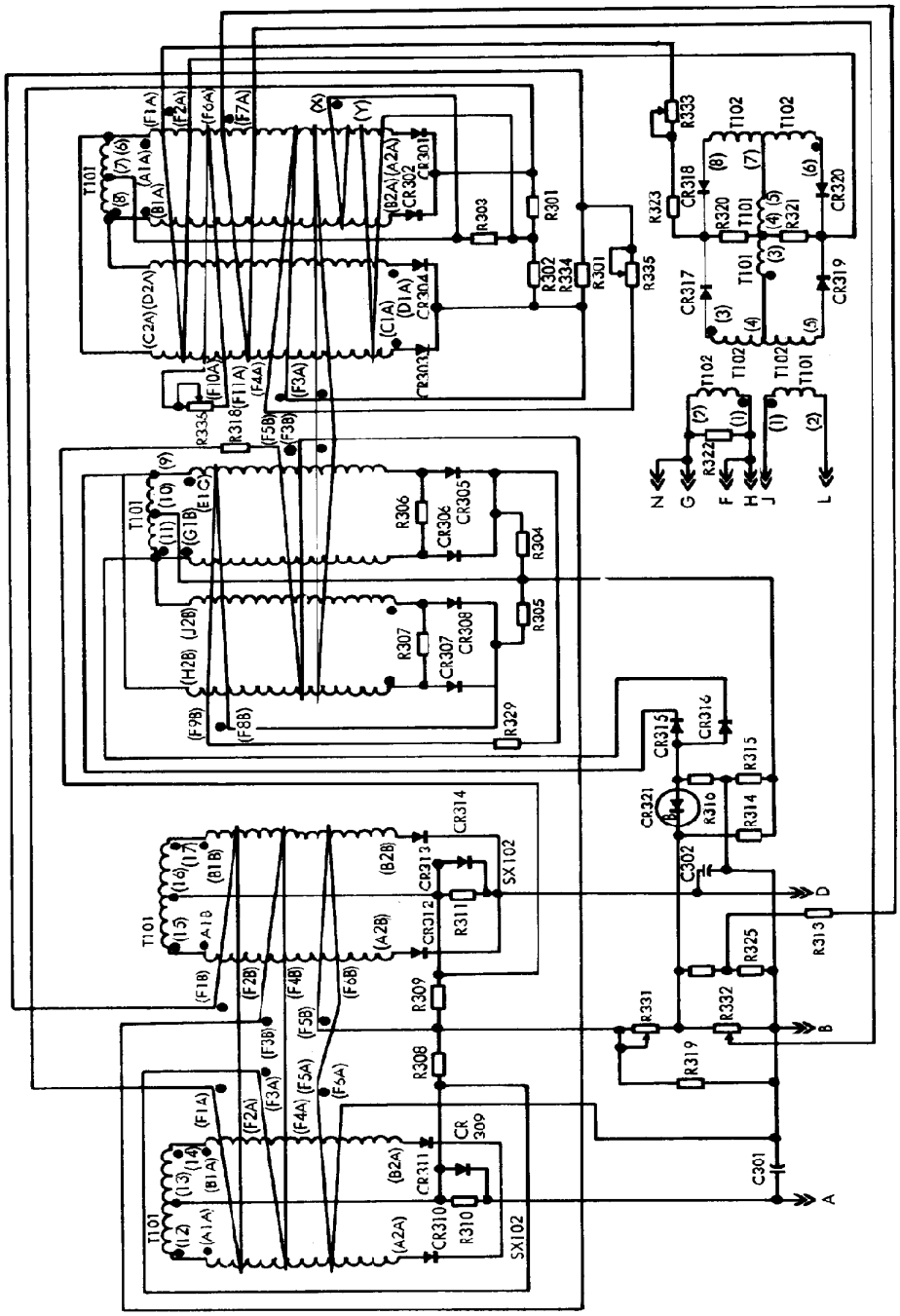

Load Controller Schematic Diagram

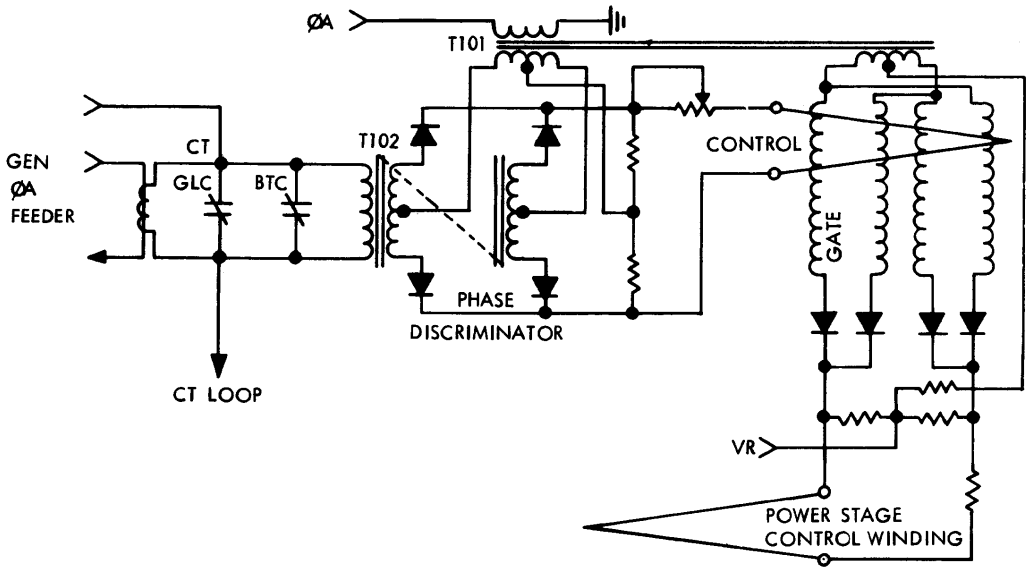

Load Controller Input Schematic Diagram

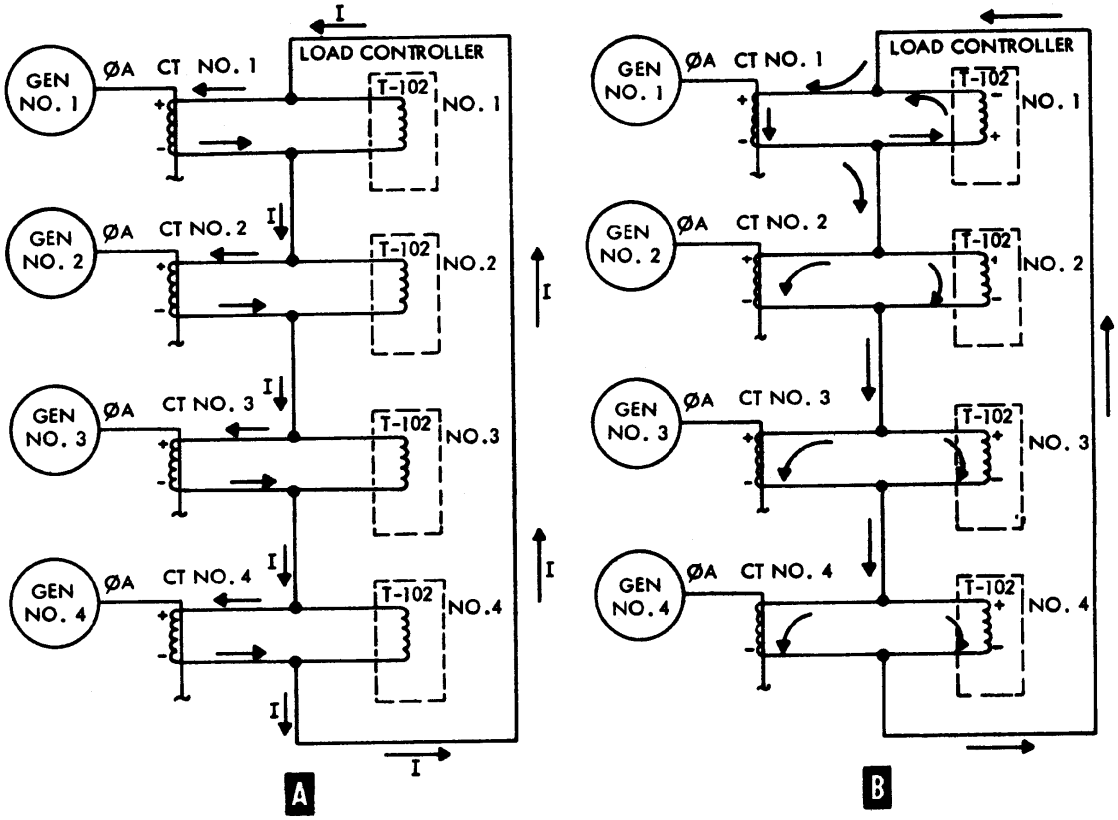

Real Load Division Loop Diagram

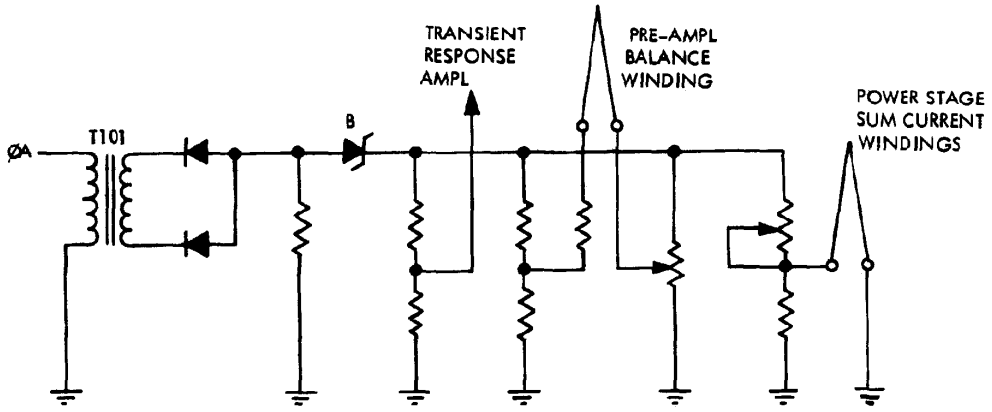

Load Controller Voltage Regulator

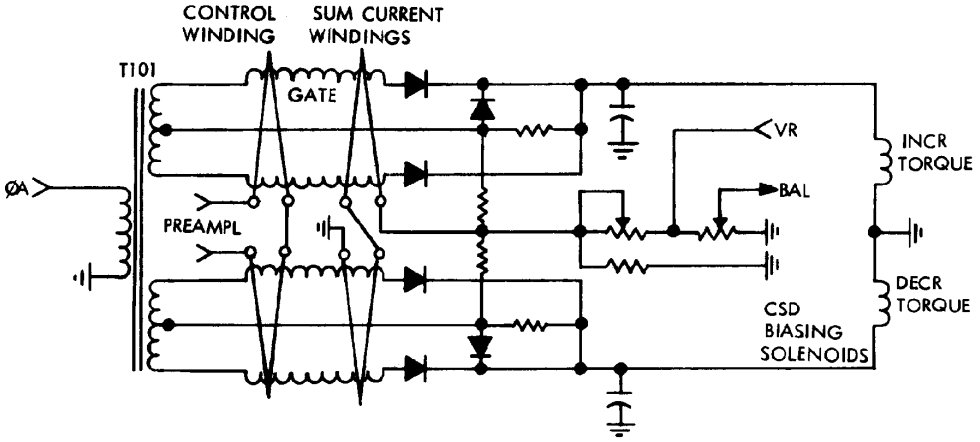

Load Controller Voltage Regulator Power Stage

Load Controller Schematic Diagrams

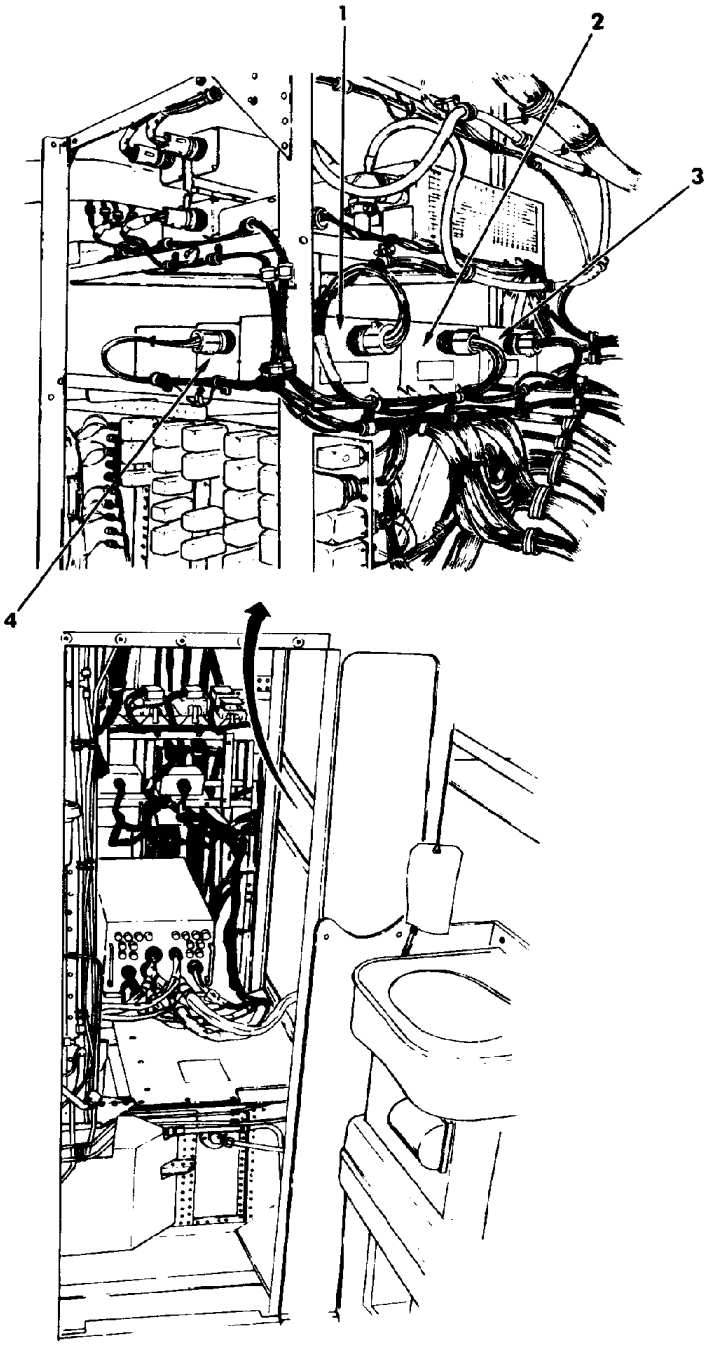

(LATRINE AREA, LOOKING FWD)

1. VOLTAGE REGULATOR NO. 2
2. VOLTAGE REGULATOR NO. 3
3. VOLTAGE REGULATOR NO. 4
4. VOLTAGE REGULATOR NO. 1

Voltage Regulator Locations

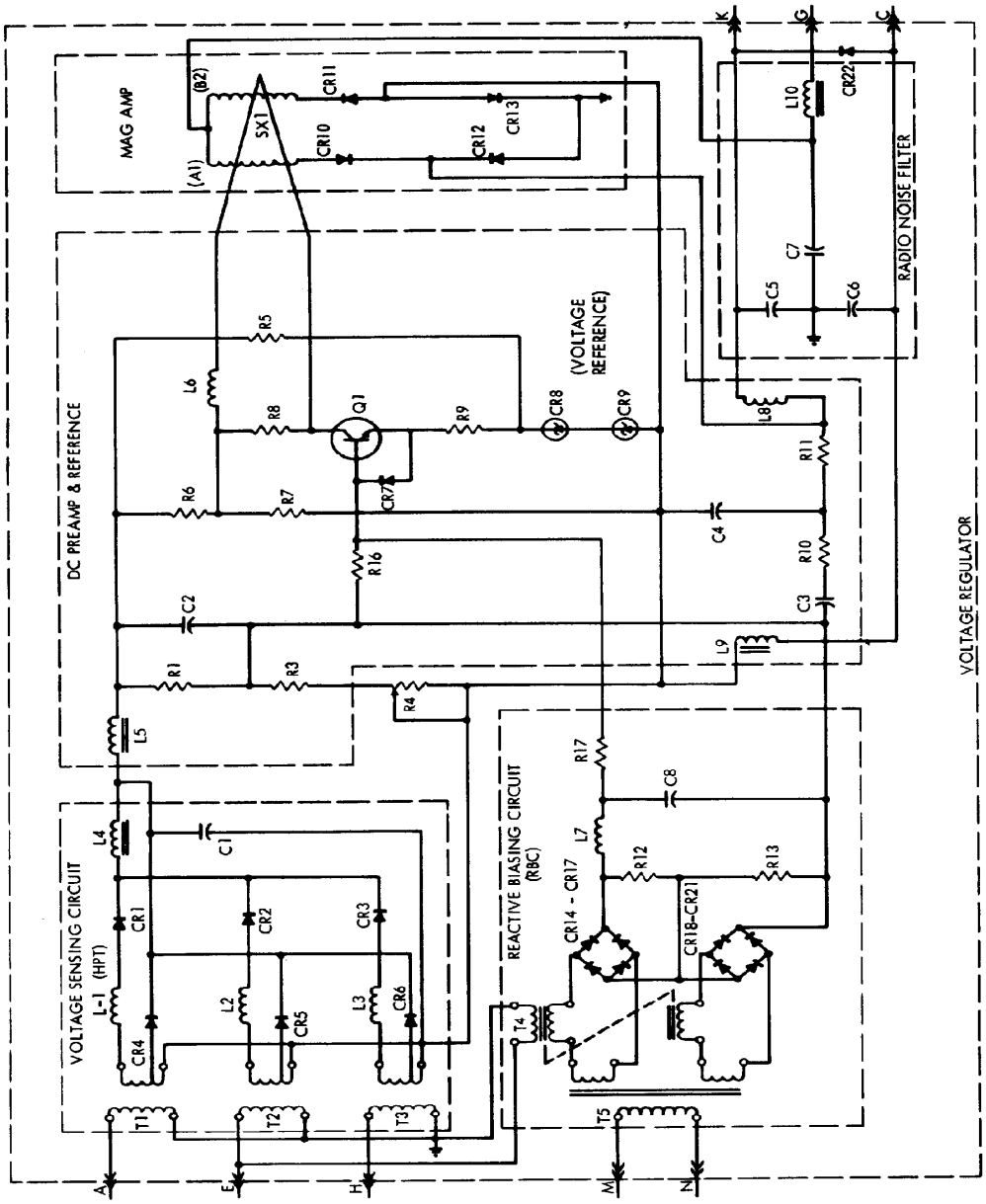

Voltage Regulator Schematic Diagram

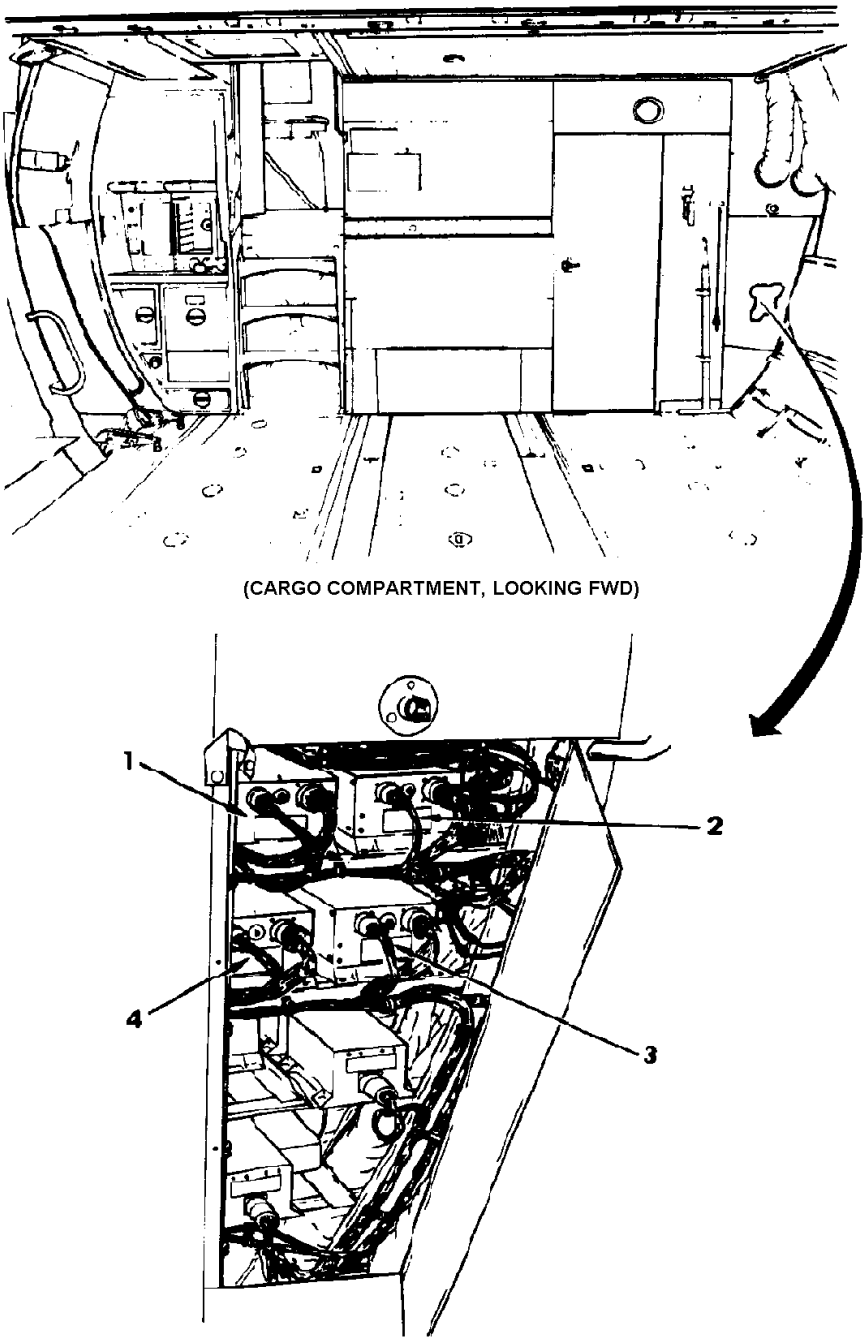

1. MAIN PROTECTION PANEL NO. 1
2. MAIN PROTECTION PANEL NO. 2
3. MAIN PROTECTION PANEL NO. 4
4. MAIN PROTECTION PANEL NO. 3

Main (Generator) Protection Panel Locations

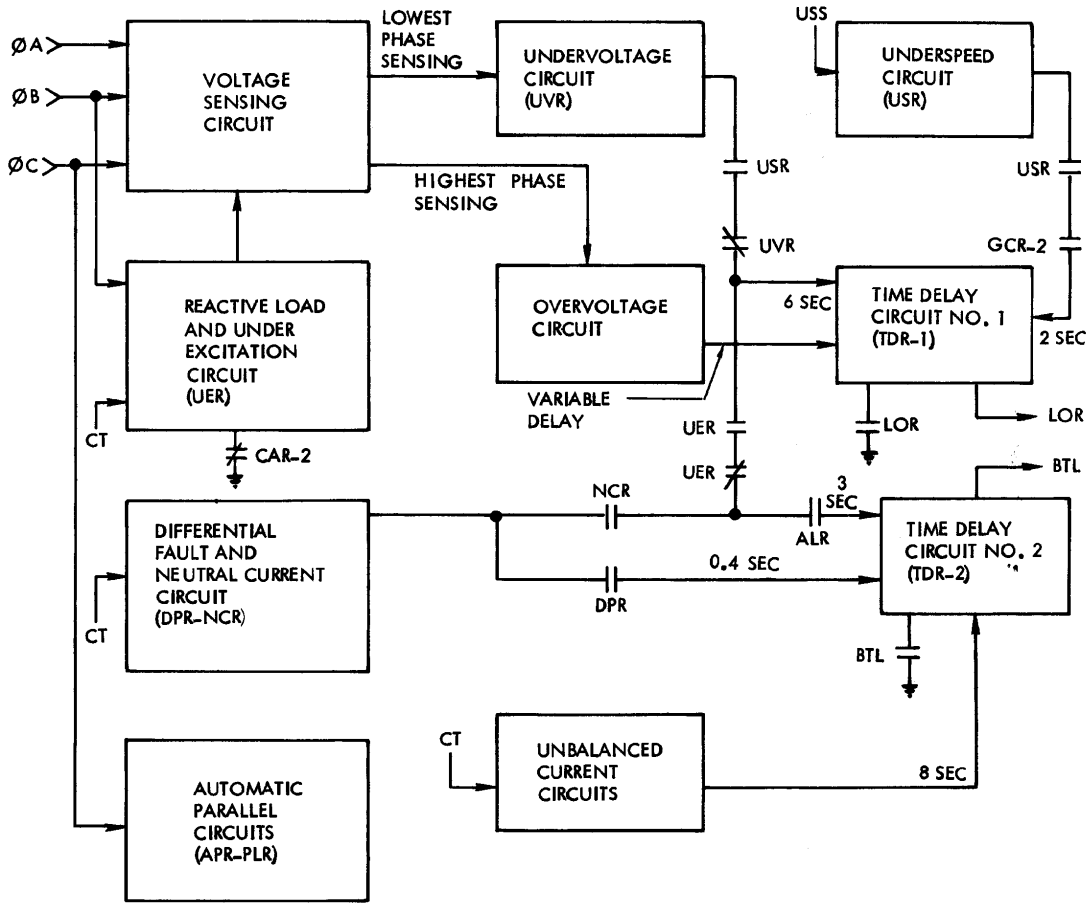

Protection Circuit Block Diagram

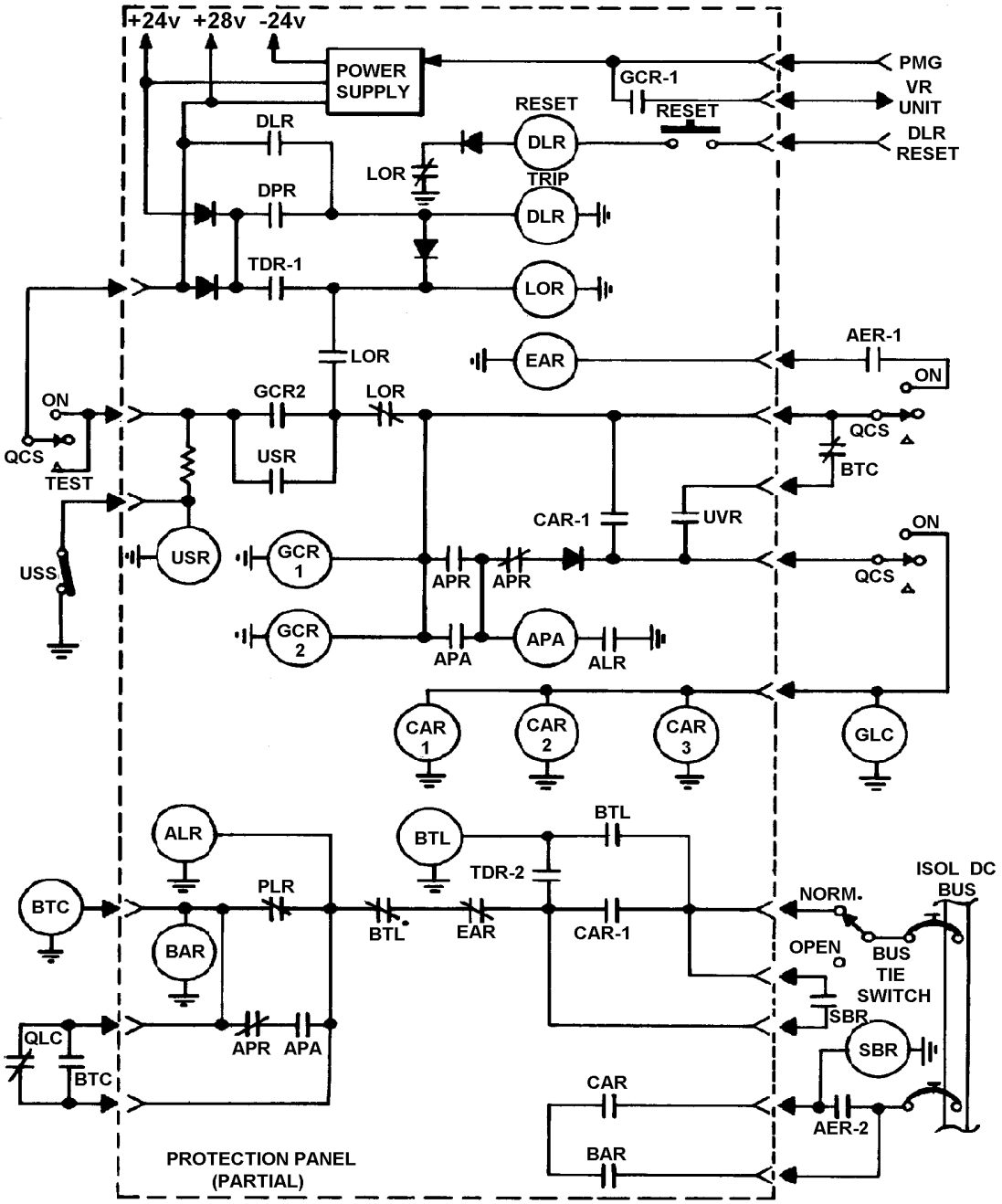

Protection Panel Simplified Schematic Diagram

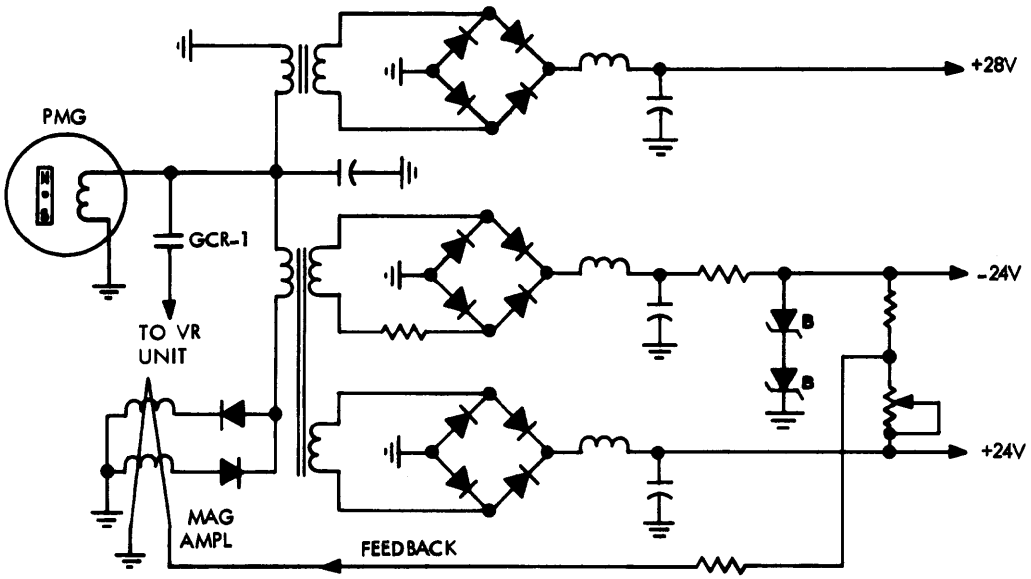

Protection Panel Power Supply Simplified Schematic Diagram

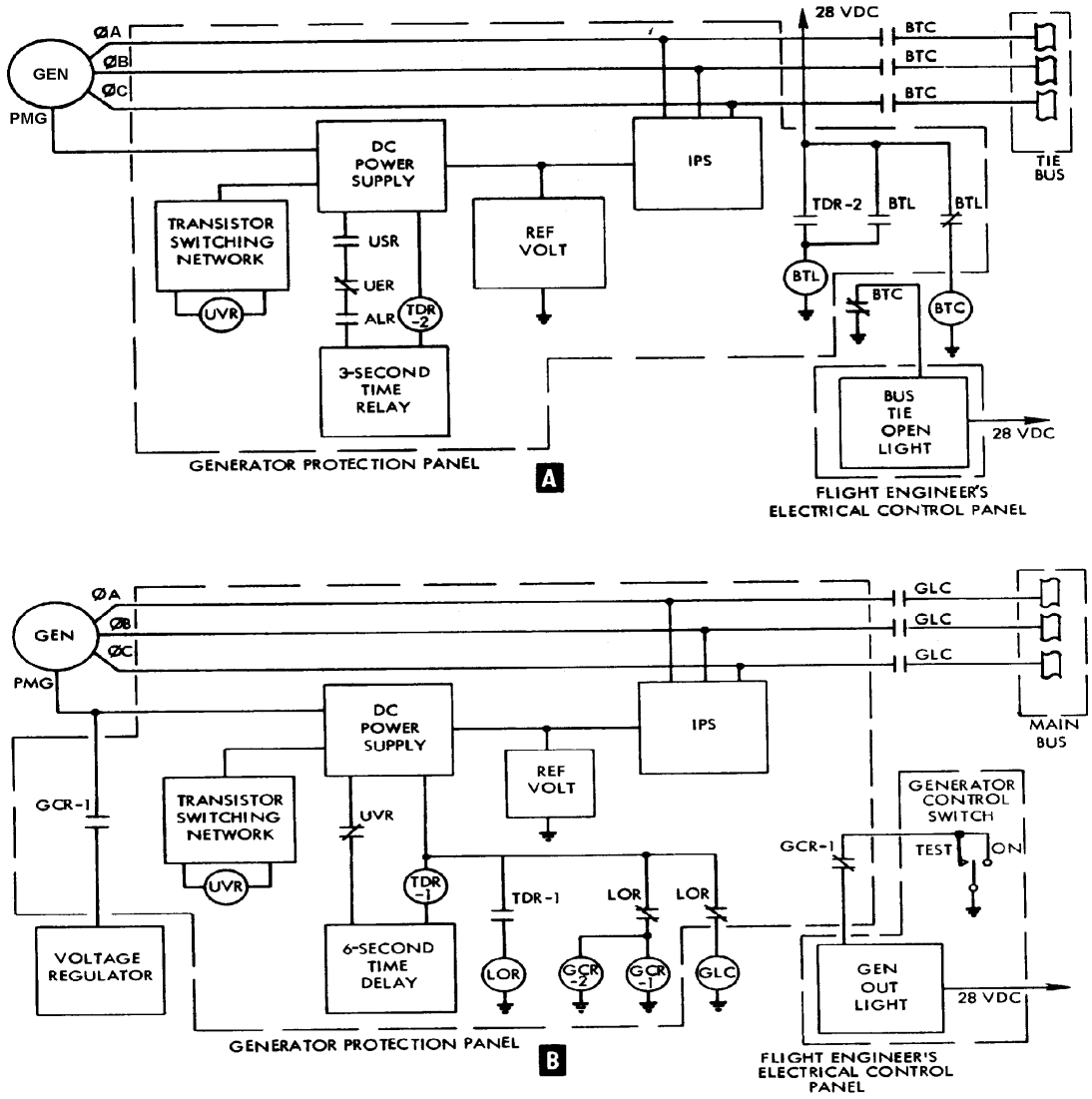

Undervoltage Protection Block Diagram

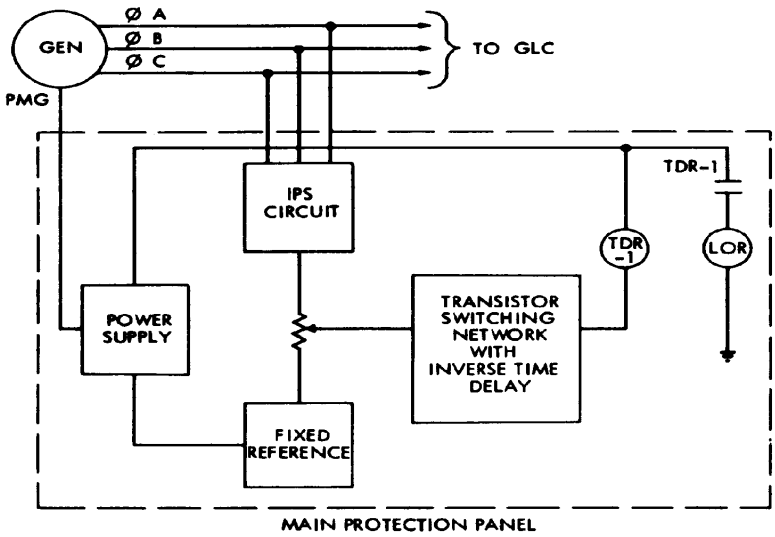

Overvoltage Protection

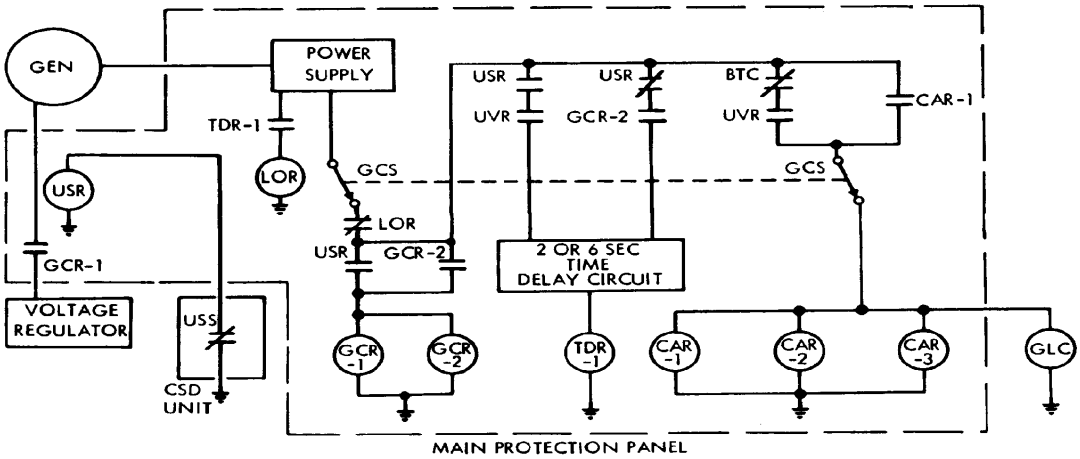

Underspeed Protection

Overvoltage and Underspeed Protection Block Diagram

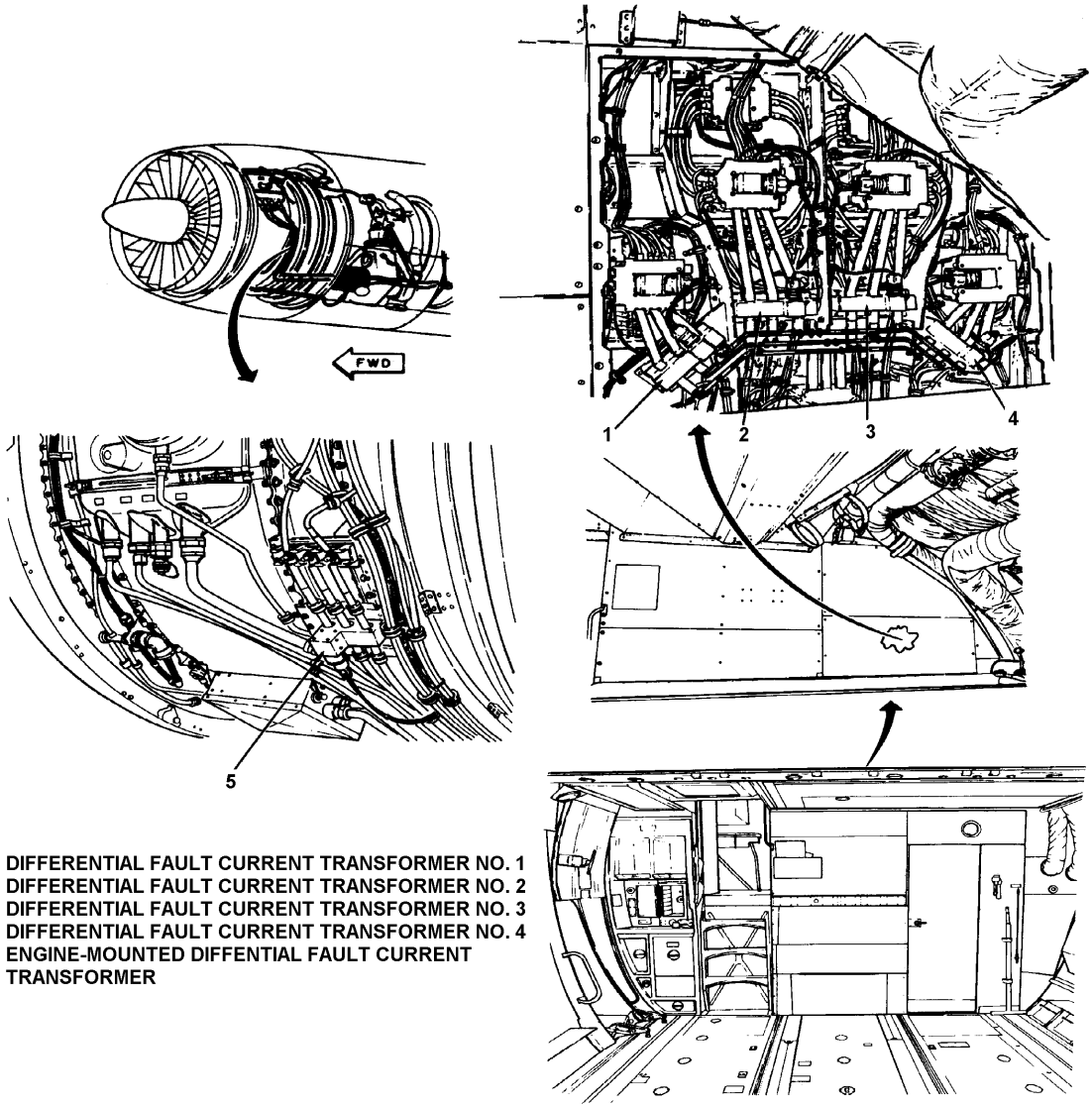

1. DIFFERENTIAL FAULT CURRENT TRANSFORMER NO. 1
2. DIFFERENTIAL FAULT CURRENT TRANSFORMER NO. 2
3. DIFFERENTIAL FAULT CURRENT TRANSFORMER NO. 3
4. DIFFERENTIAL FAULT CURRENT TRANSFORMER NO. 4
5. ENGINE-MOUNTED DIFFENTIAL FAULT CURRENT TRANSFORMER

(CARGO COMPARTMENT, LOOKING FWD AND UP)

Generator Differential Fault Current Transformer Locations

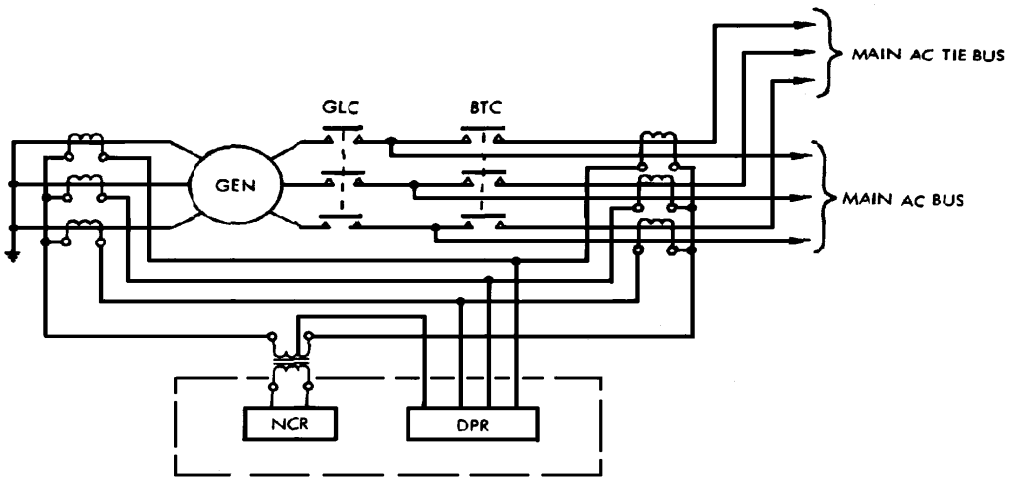

Differential Fault and Neutral Current Loop

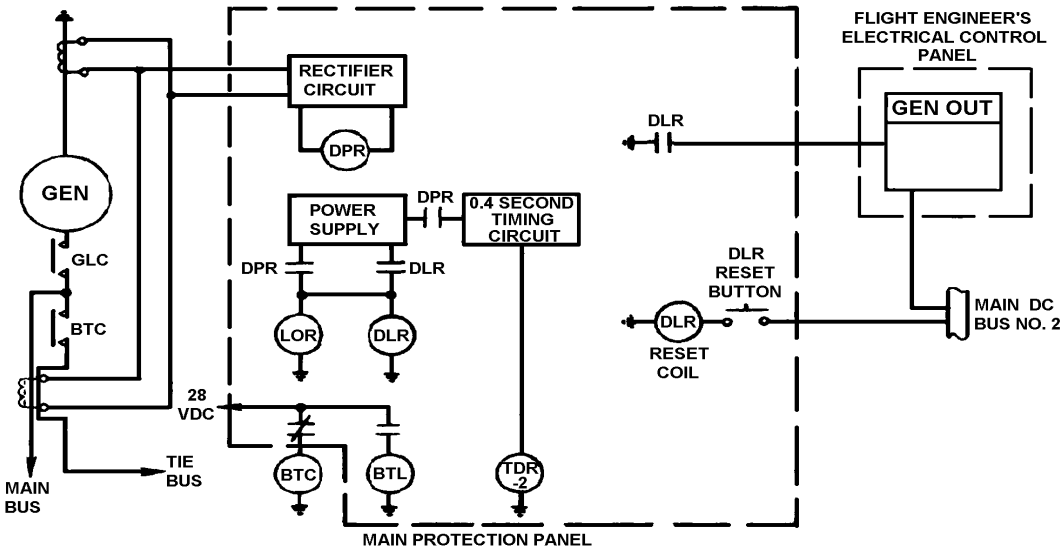

Differential Fault Protection

Differential Fault Protection & Neutral Current Loop Diagram

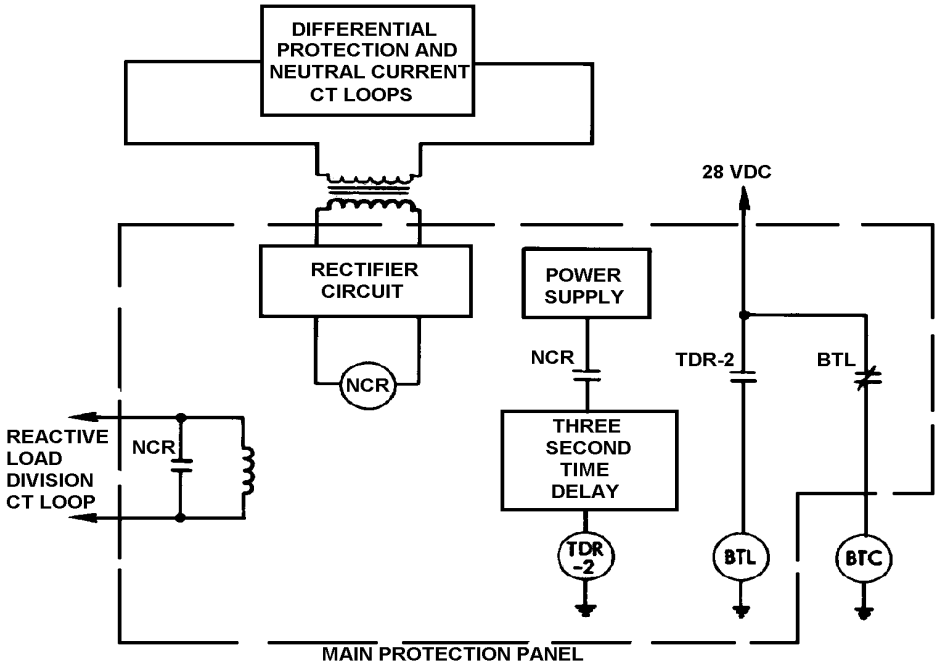

Neutral Current Protection

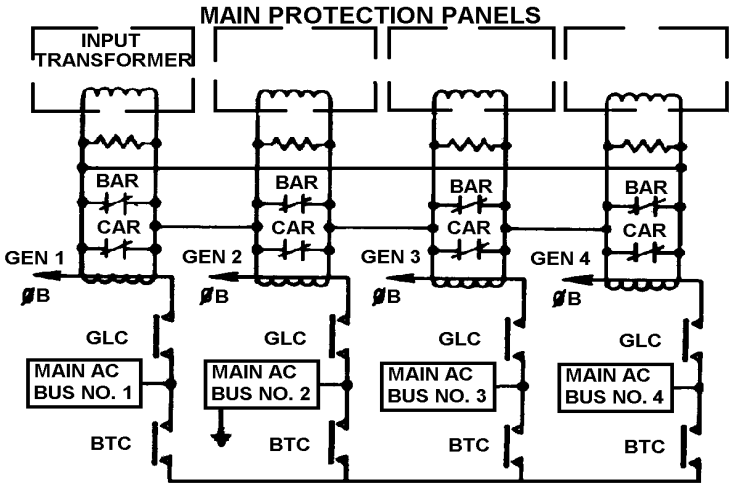

Unbalanced Current Loop Diagram

Current Diagrams

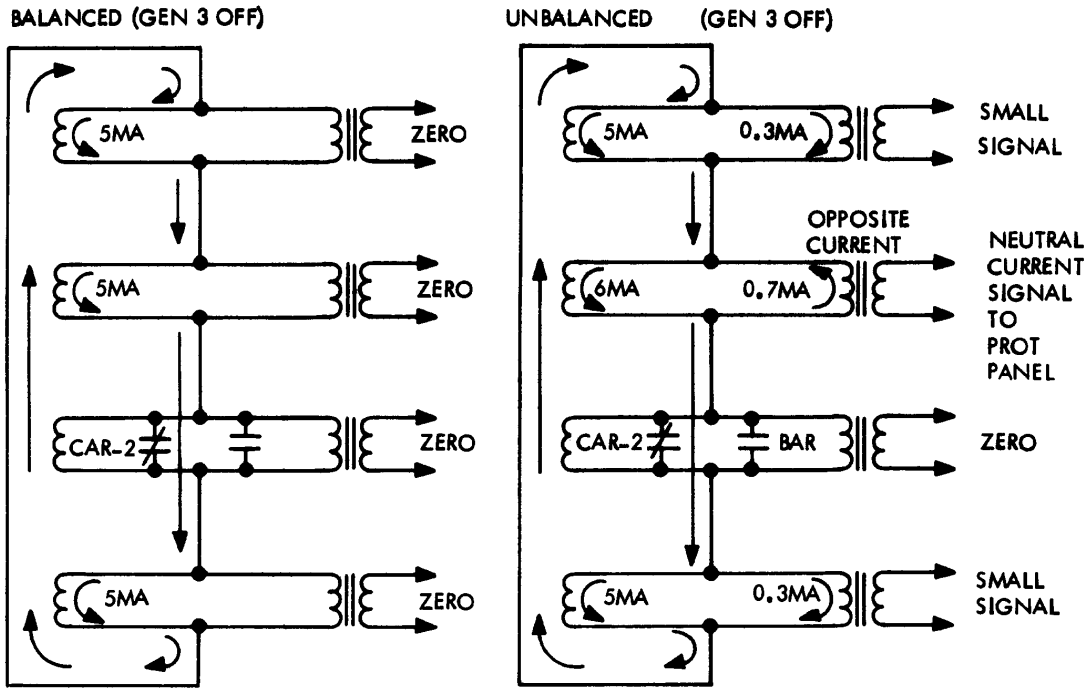

Unbalanced Current Flow Diagram

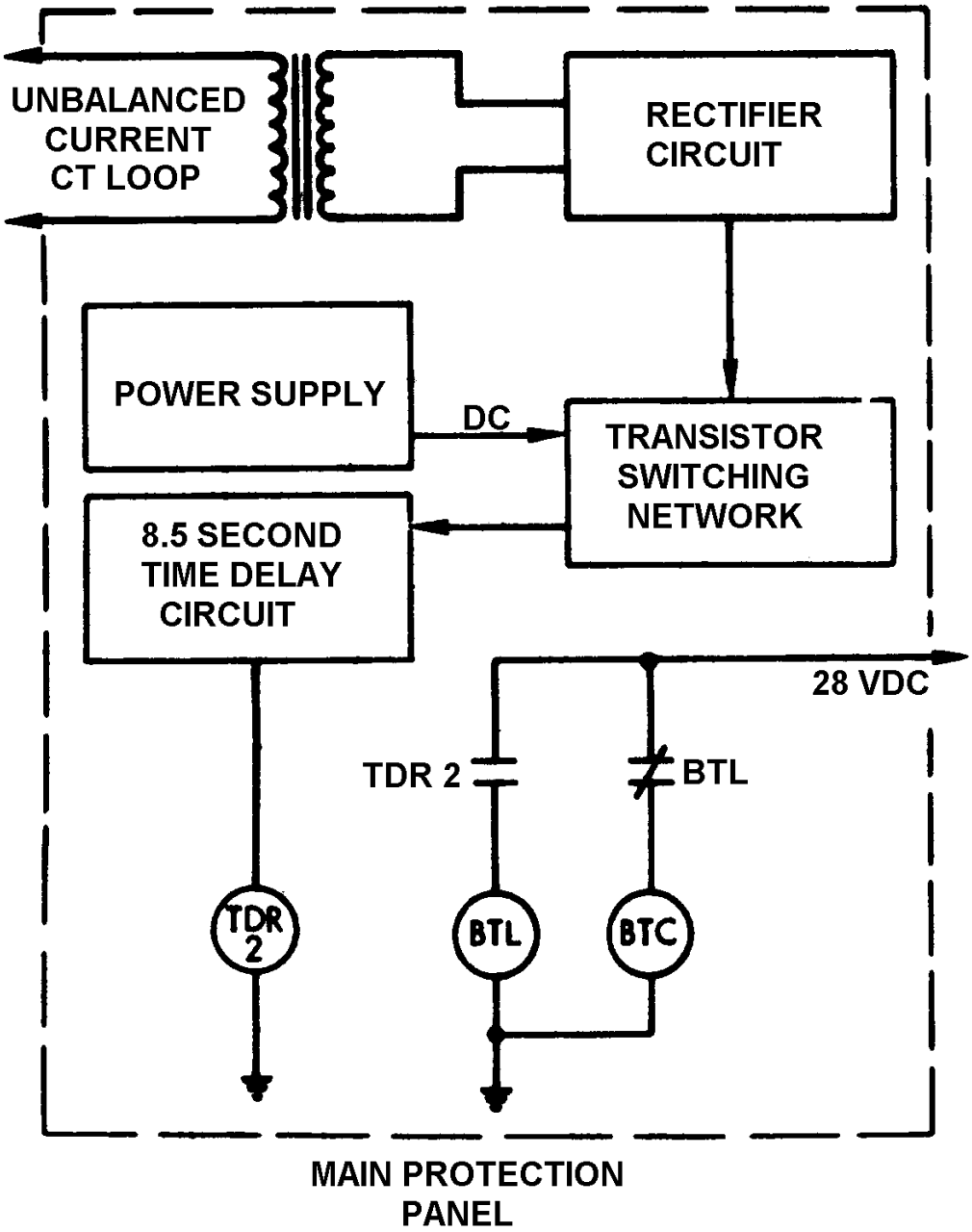

Unbalanced Current Protection Block Diagram

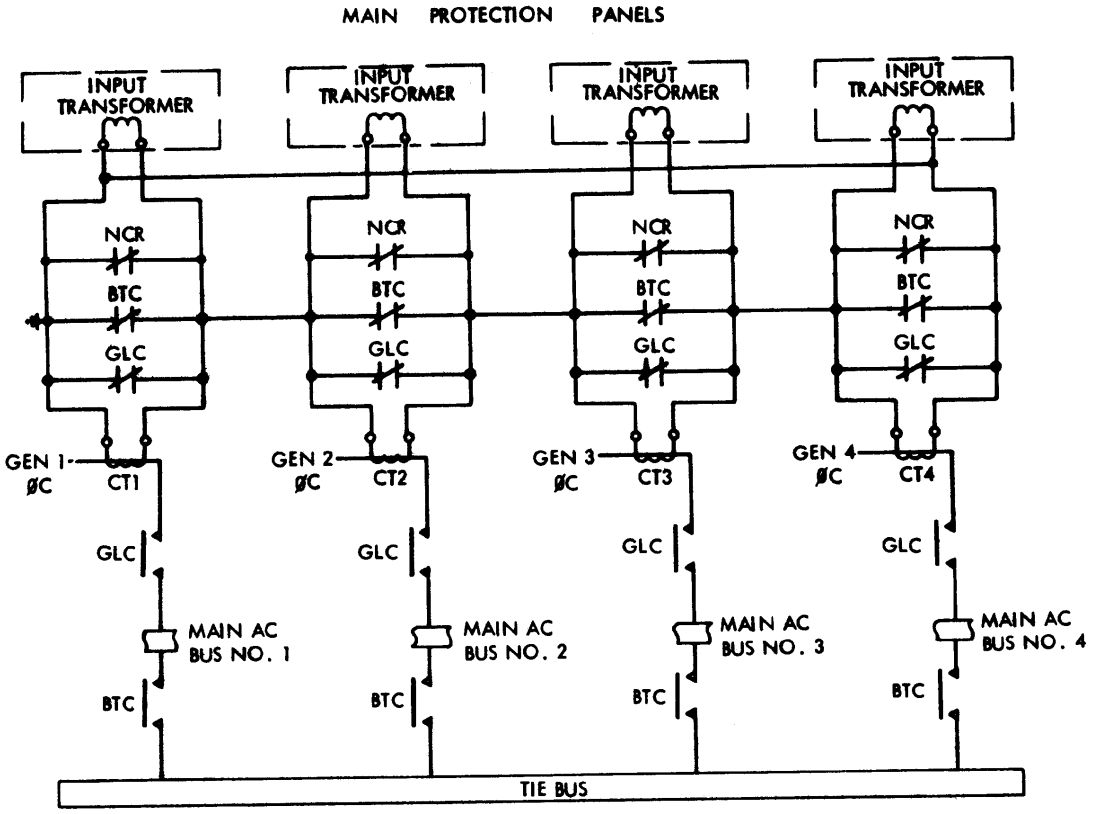

Reactive Biasing Loop Diagram

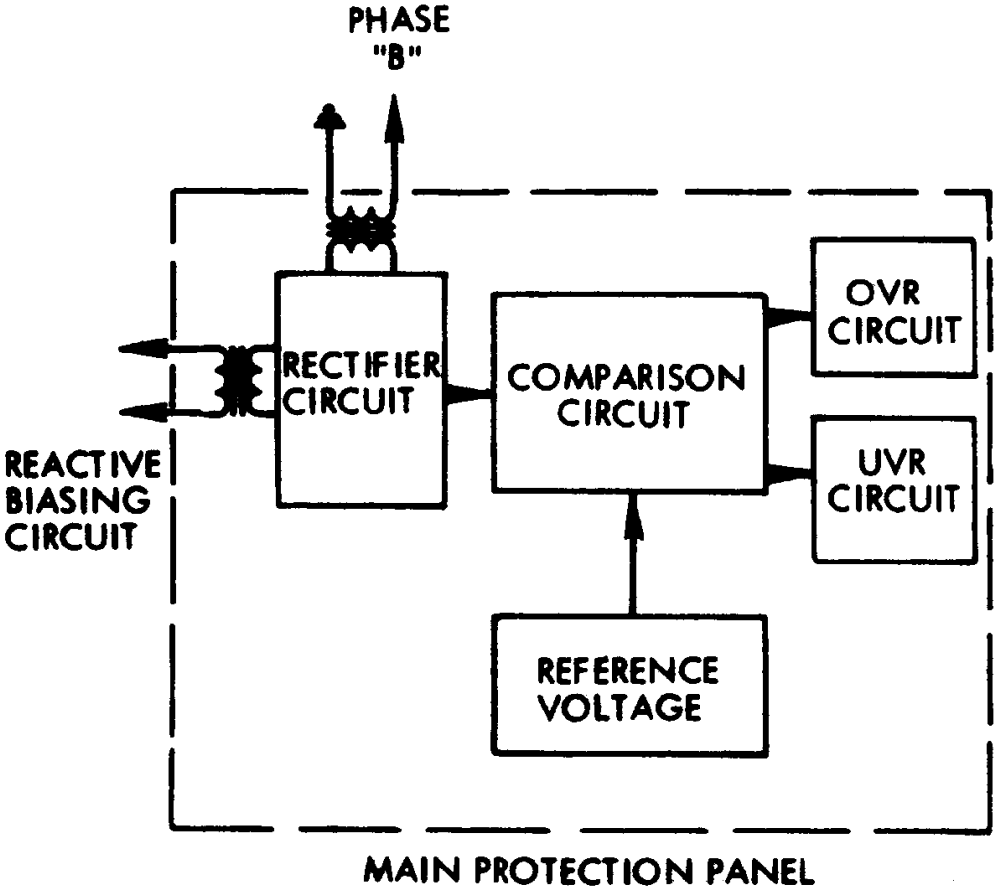

Reactive Biasing Current Block Diagram

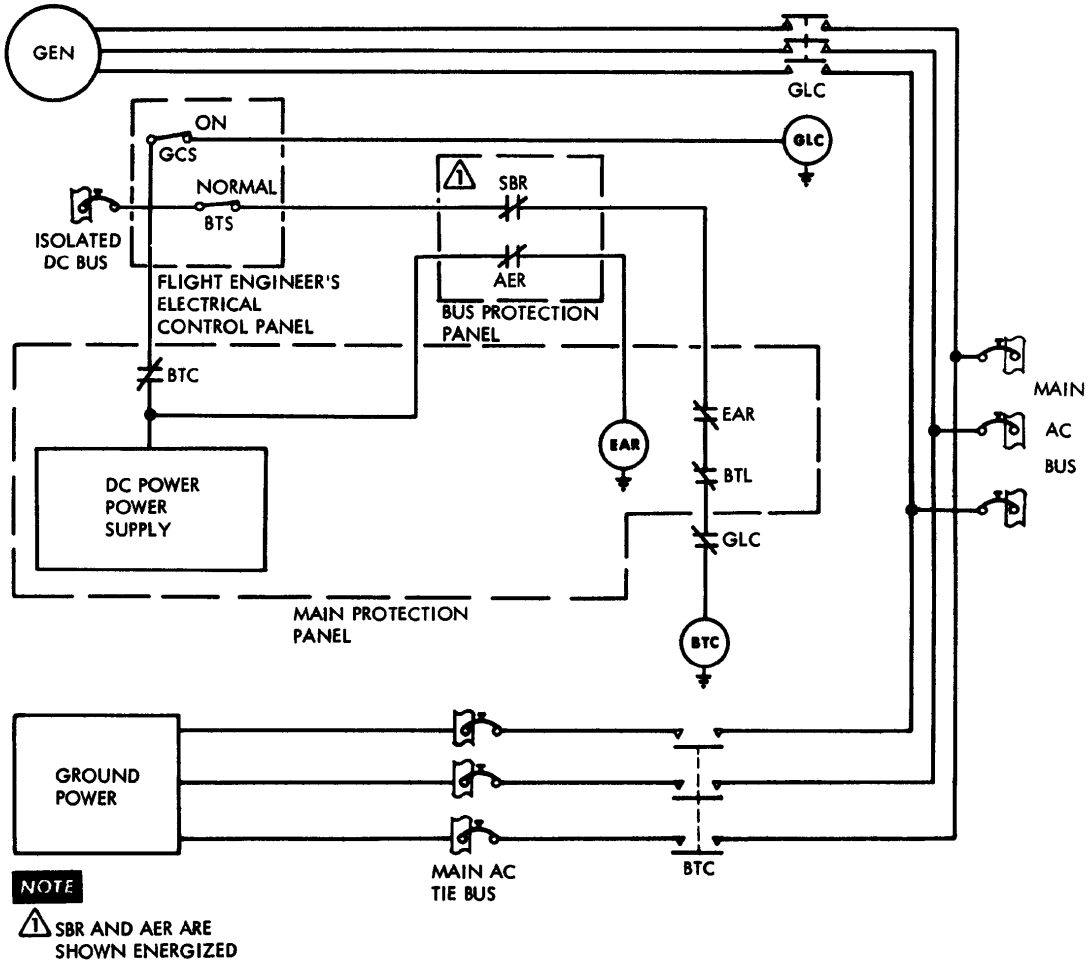

Power Switching Circuit Simplified Schematic Diagram

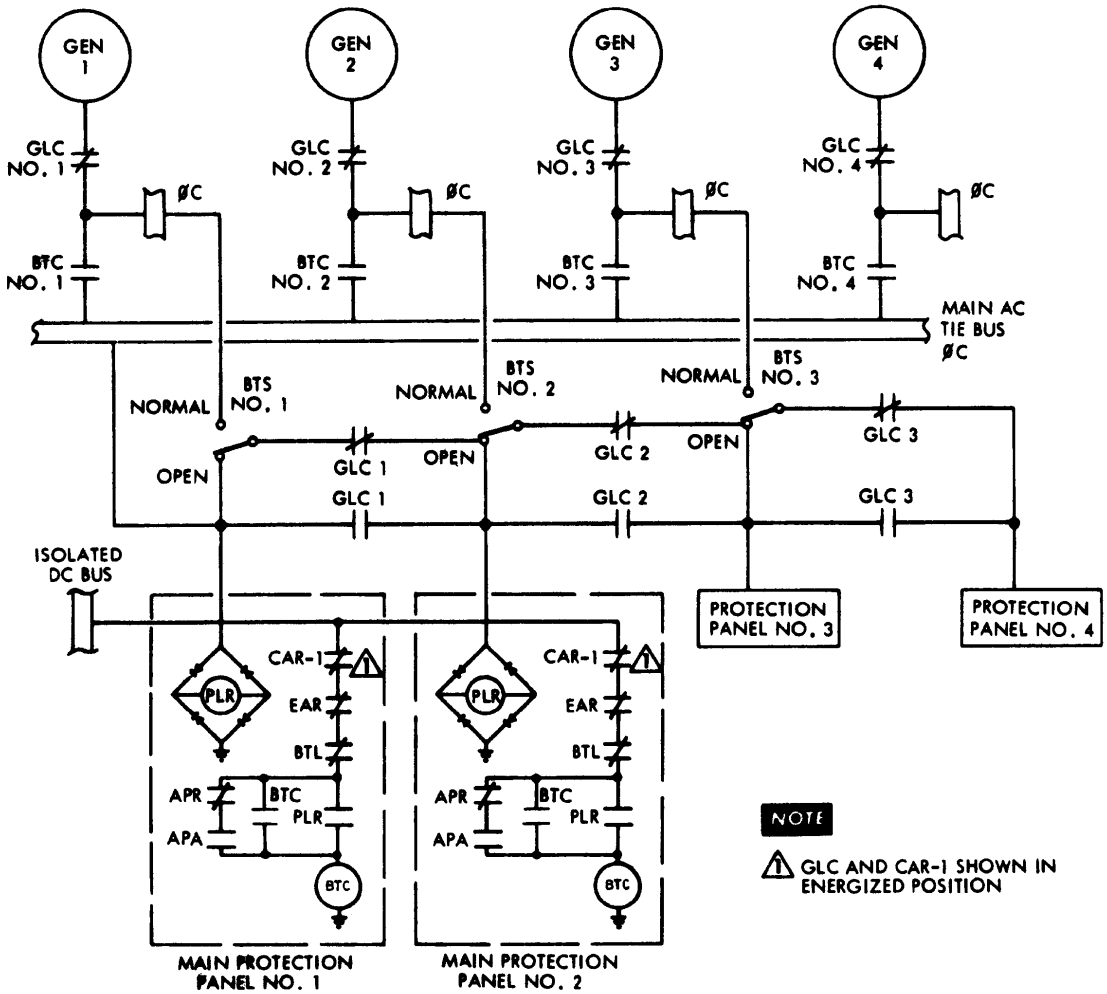

Sequence Switching Circuit Simplified Schematic Diagram

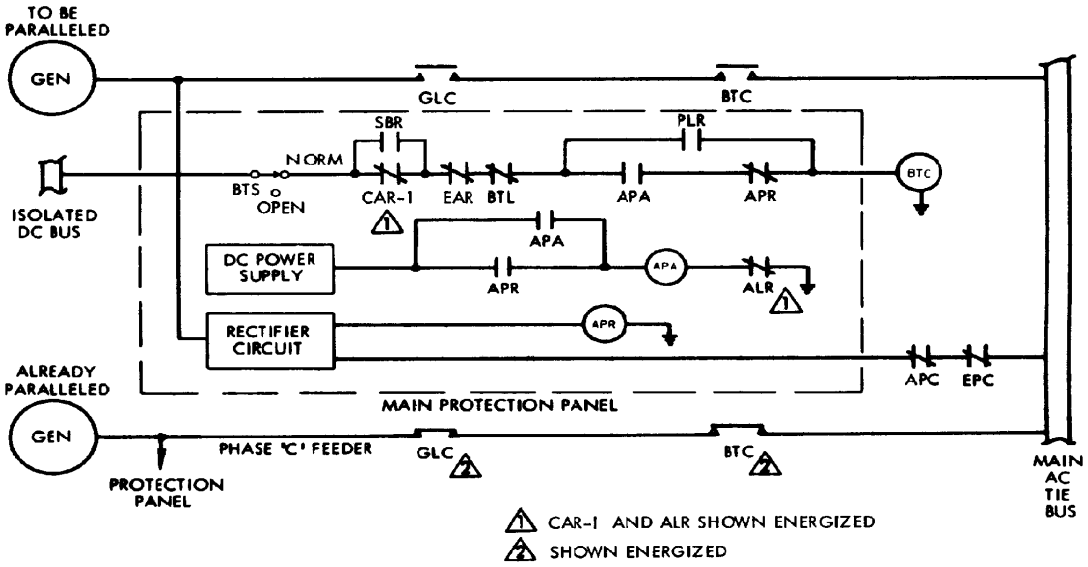

Automatic Paralleling Circuit

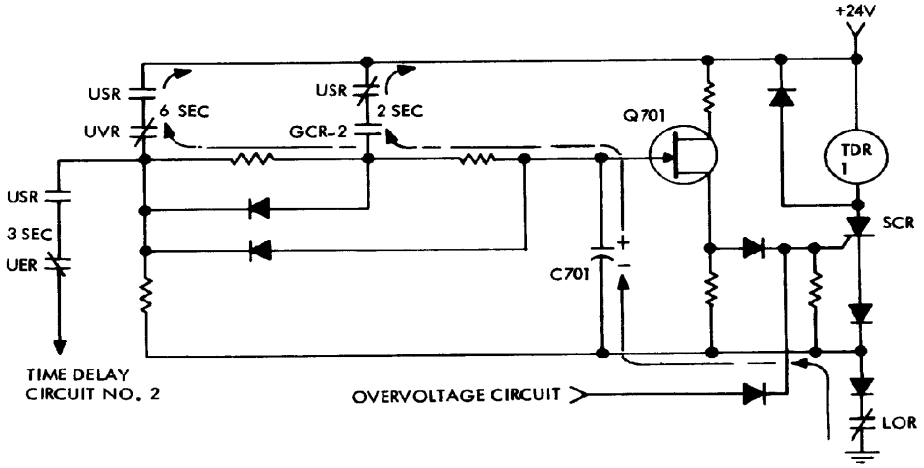

Time Delay Circuit No. 1

Simplified Schematic Diagrams

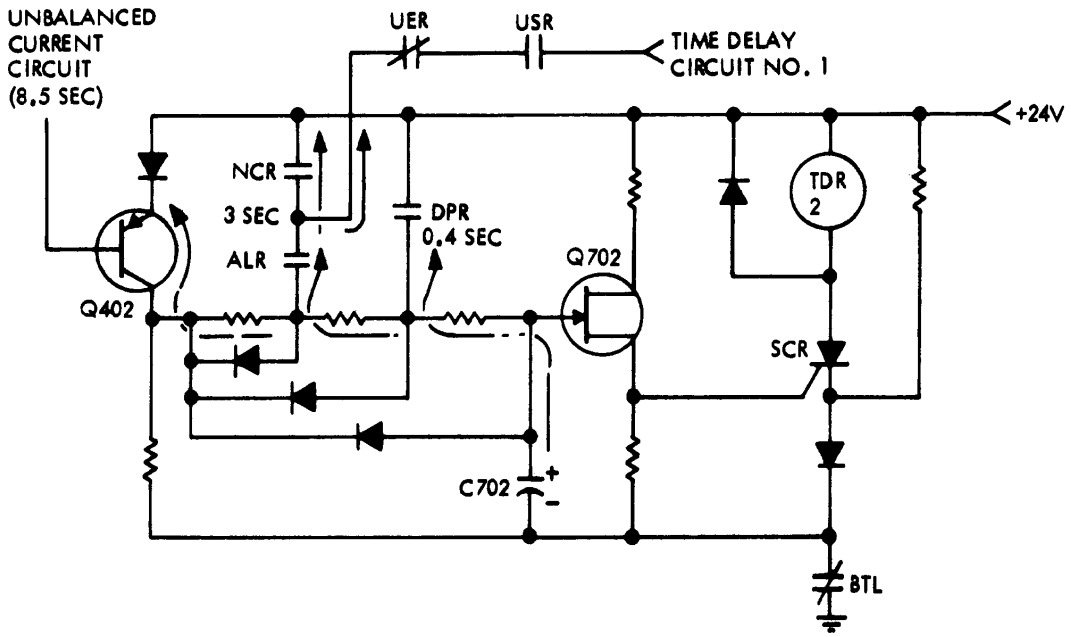

Time Delay Circuit No. 2 Simplified Schematic Diagram

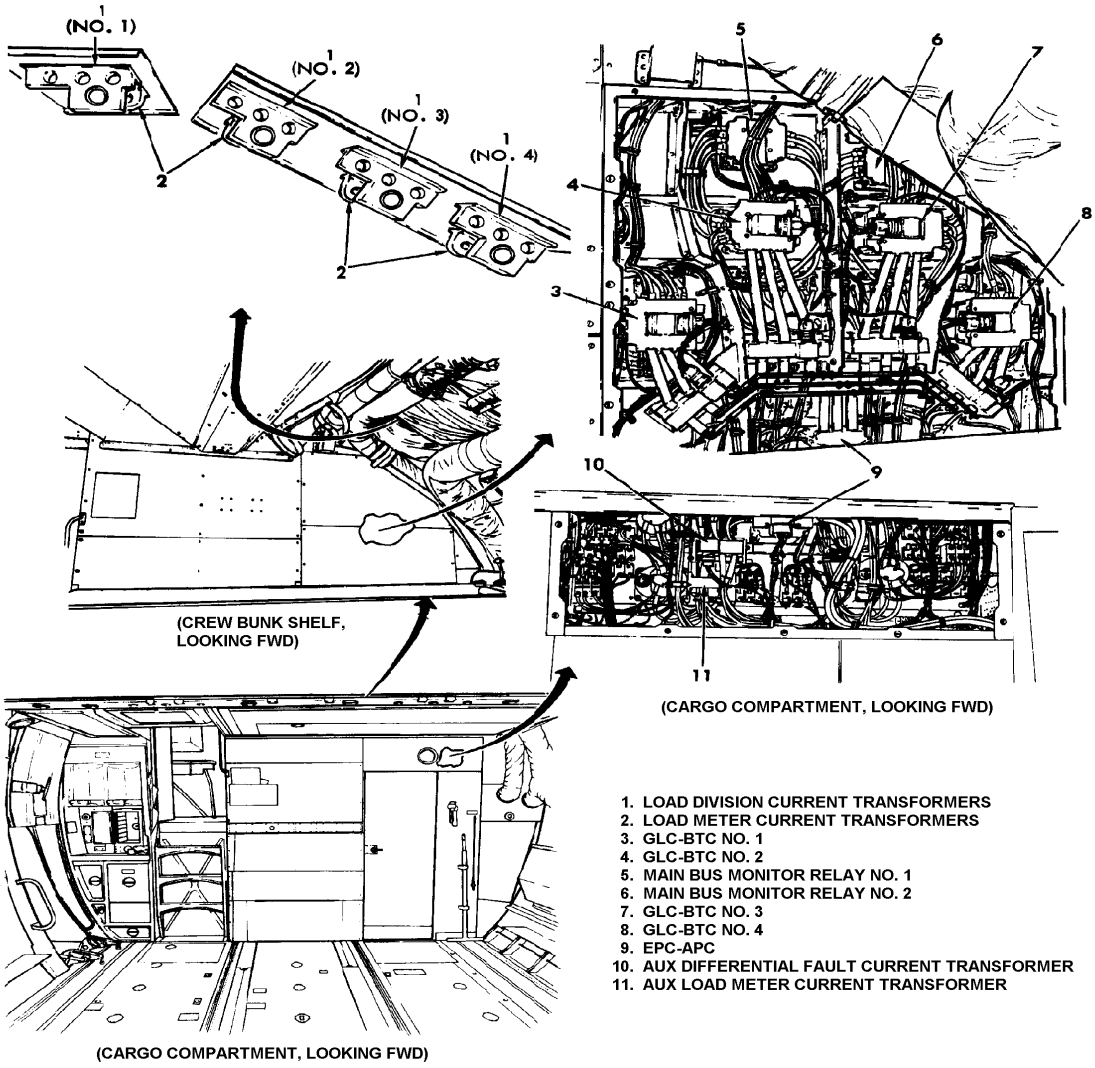

Current Transformer & Main AC Distribution Center Components

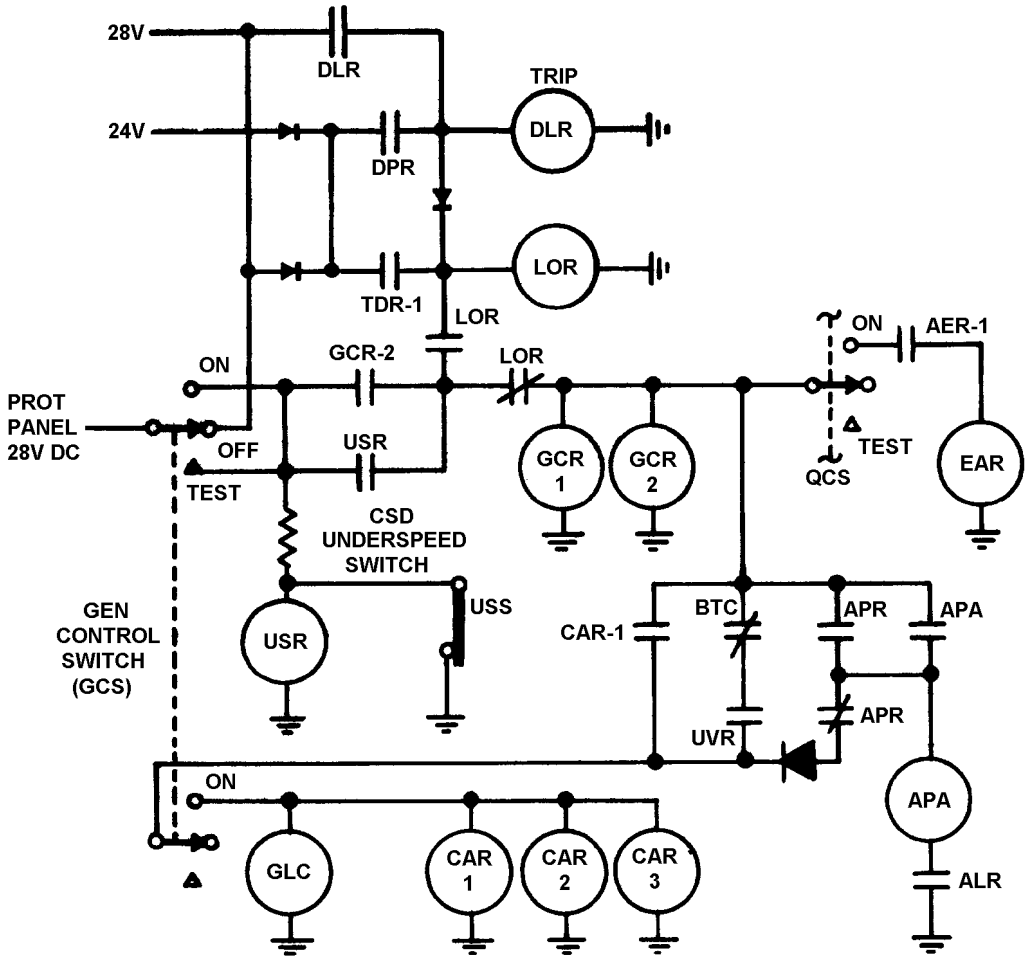

Protection Panel/Generator Control Switch Schematic Diagram

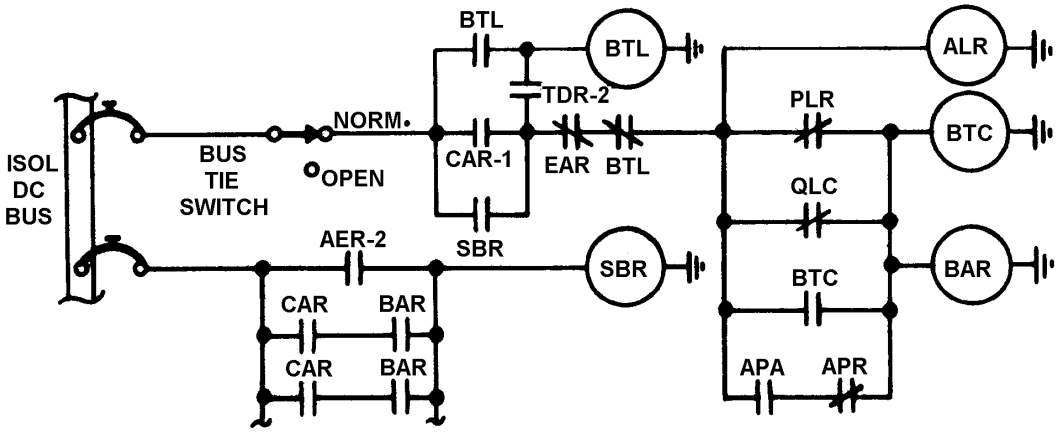

Bus Tie Contactor Control Simplified Schematic Diagram

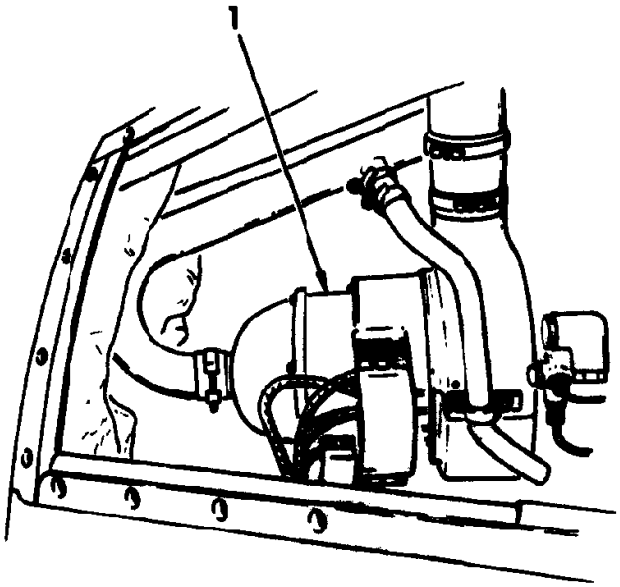

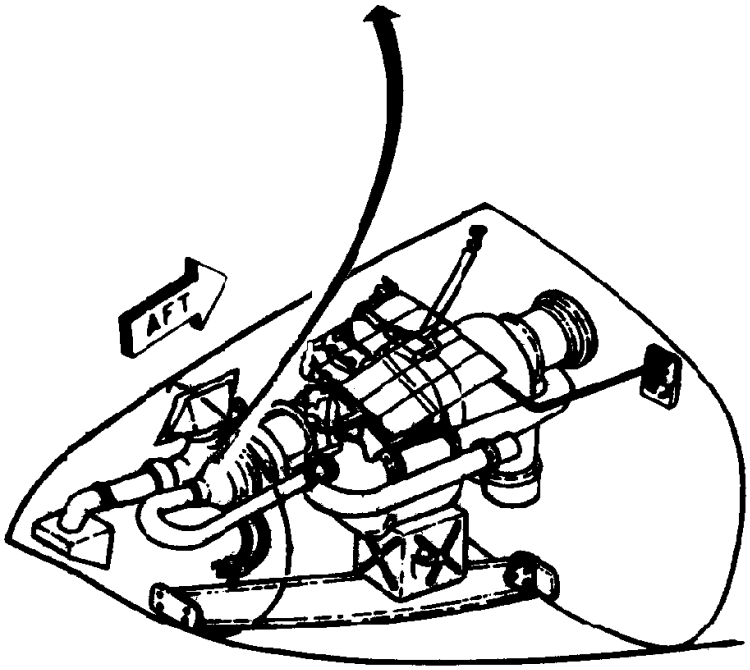

LEFT MLG POD

1. AUXILIARY POWER UNIT (APU) GENERATOR

Auxiliary Power Unit (APU) Generator Location

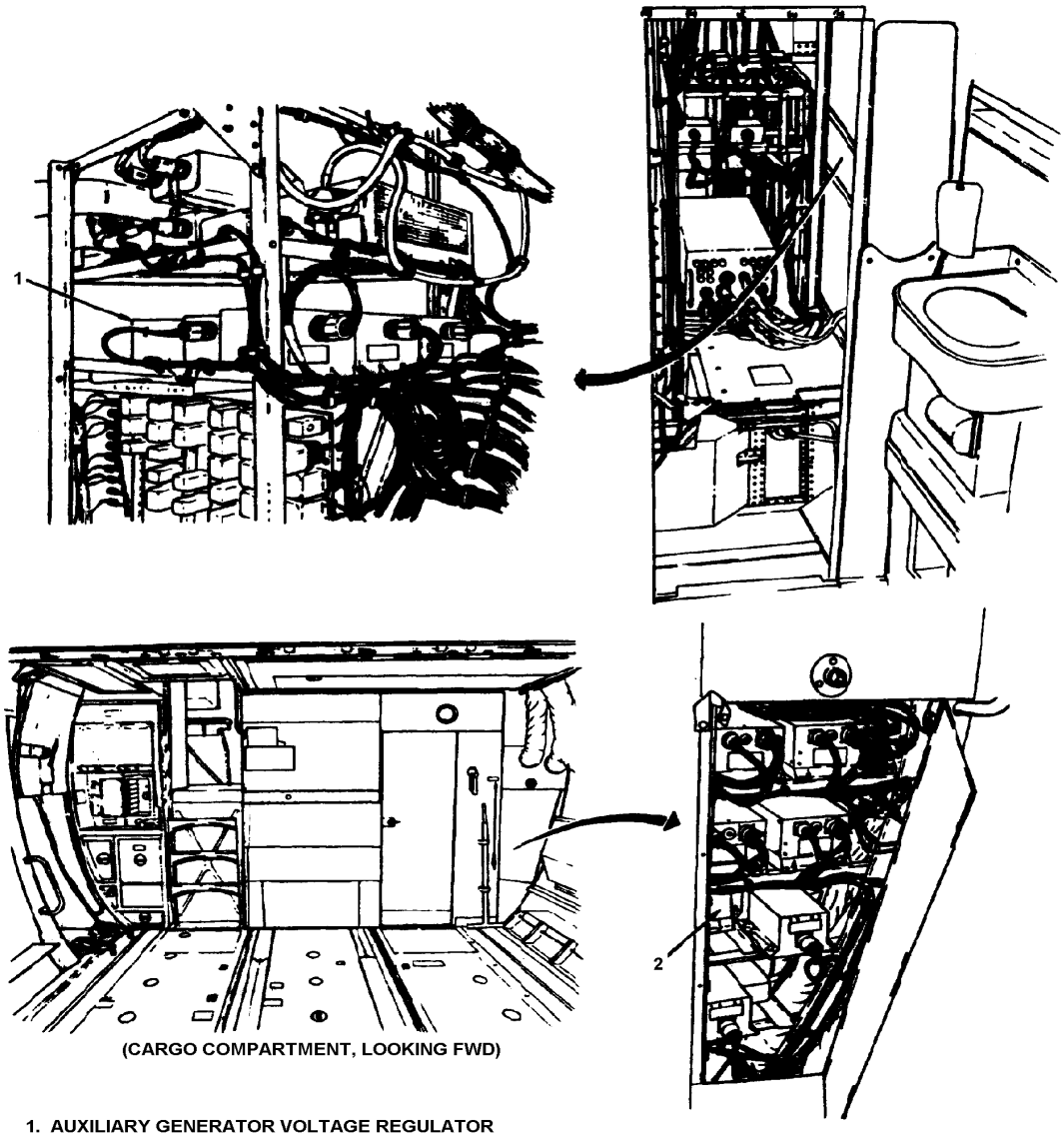

1. AUXILIARY GENERATOR VOLTAGE REGULATOR
2. AUXILIARY GENERATOR PROTECTION PANEL

Auxiliary Generator Voltage Regulator and Protection Panel Location

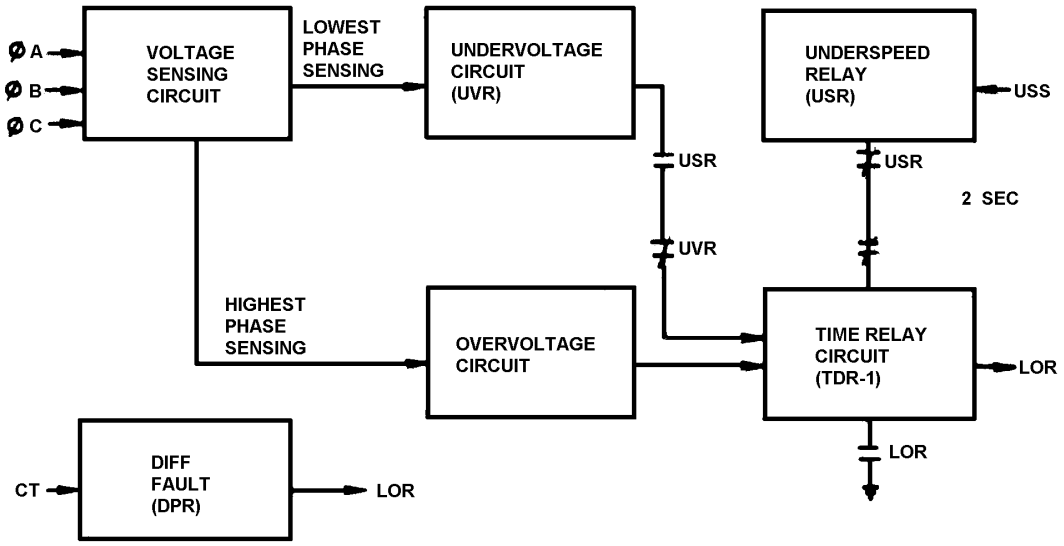

Auxiliary Generator Protection Circuit Block Diagram

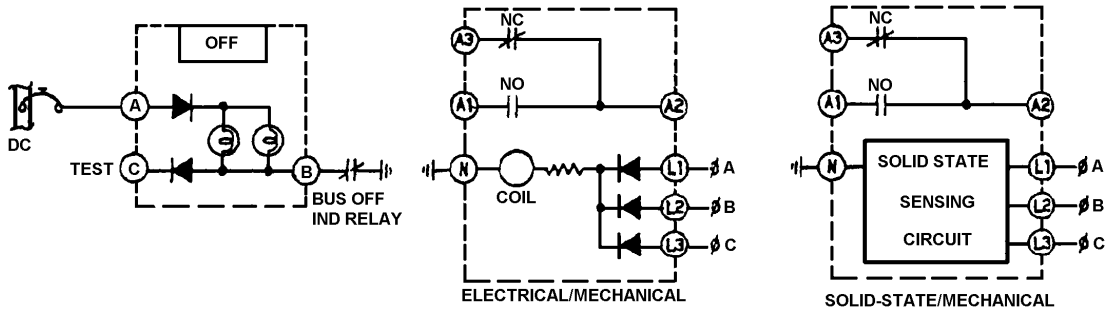

Bus OFF Warning Light and Indicator Relay

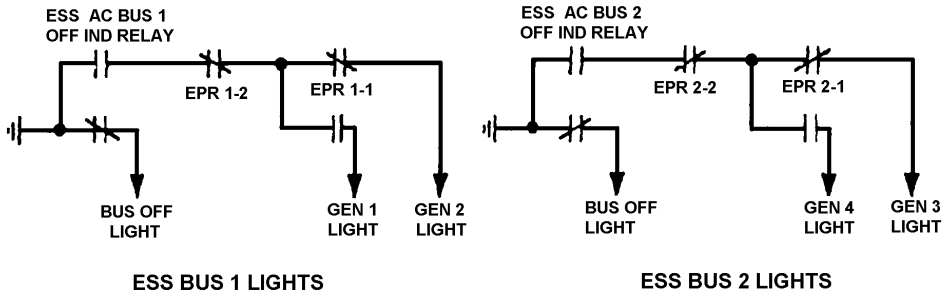

Essential Bus Light Control

Bus Simplified Schematic Diagrams

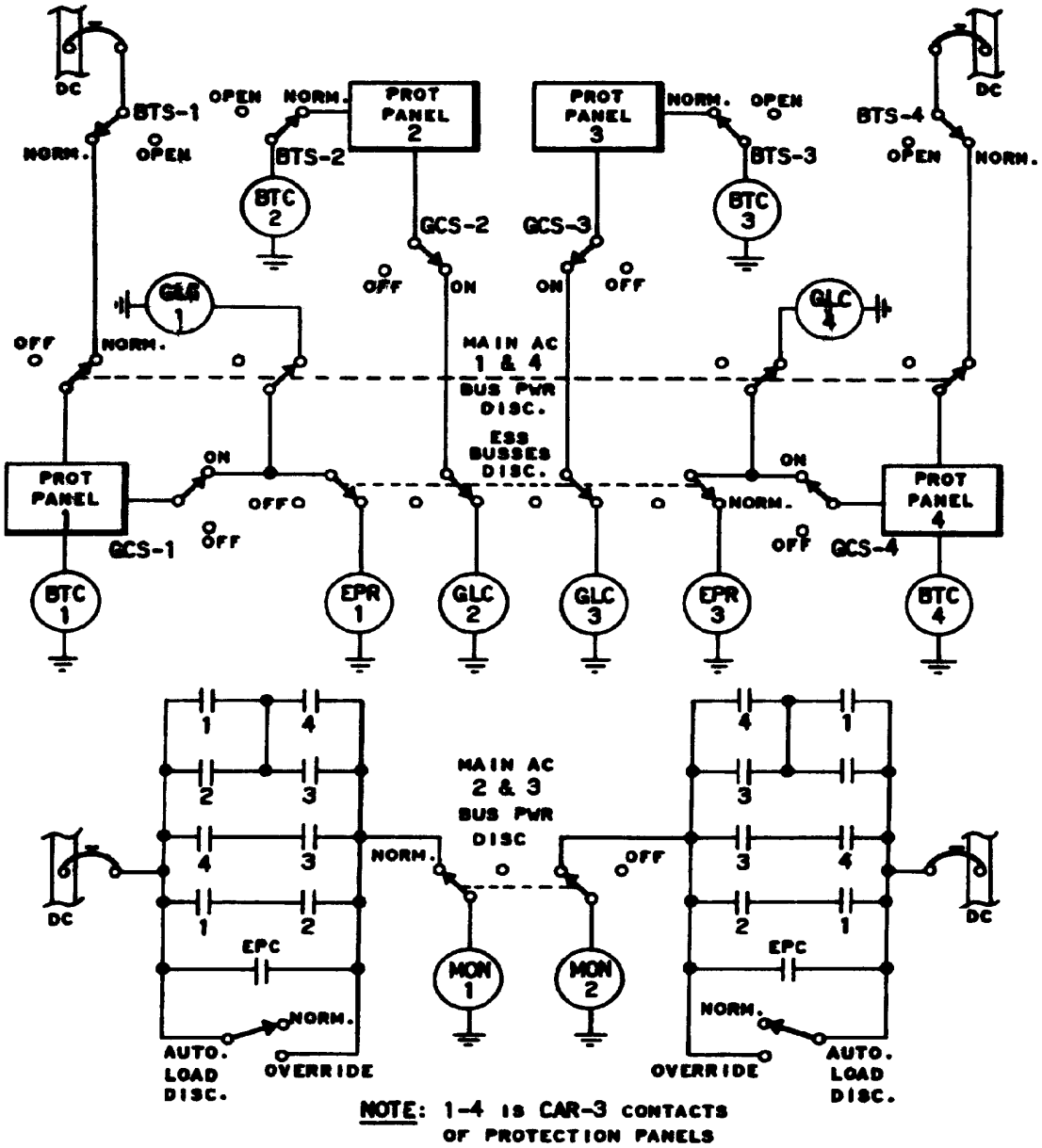

Bus Power Disconnect Switch Simplified Schematic Diagram

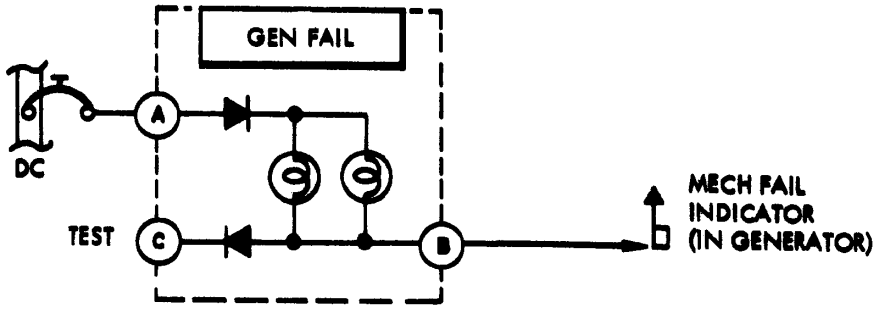

GENERATOR FAIL LIGHT

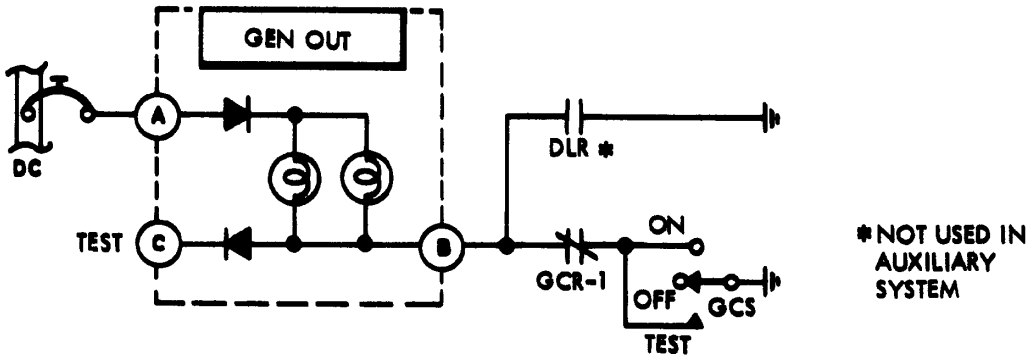

GENERATOR OUT LIGHT

Generator Monitor Light Control Simplified Schematic Diagram

Direct Current (DC) Generation System

The normal source of DC power is two transformer-rectifier units. These units change three-phase, AC voltage to 28 VDC. Each unit is rated at 28 volts and 200 amperes. The units also convert external or auxiliary generator AC into DC voltage during ground operation. A battery is provided to start the APU. The battery is also a standby source for emergency operation. During inflight emergencies, DC power is automatically supplied from a hydraulically- driven emergency generator. The same 2-KVA generator also provides emergency AC power. DC power is controlled and monitored at the flight engineer's electrical control panel.

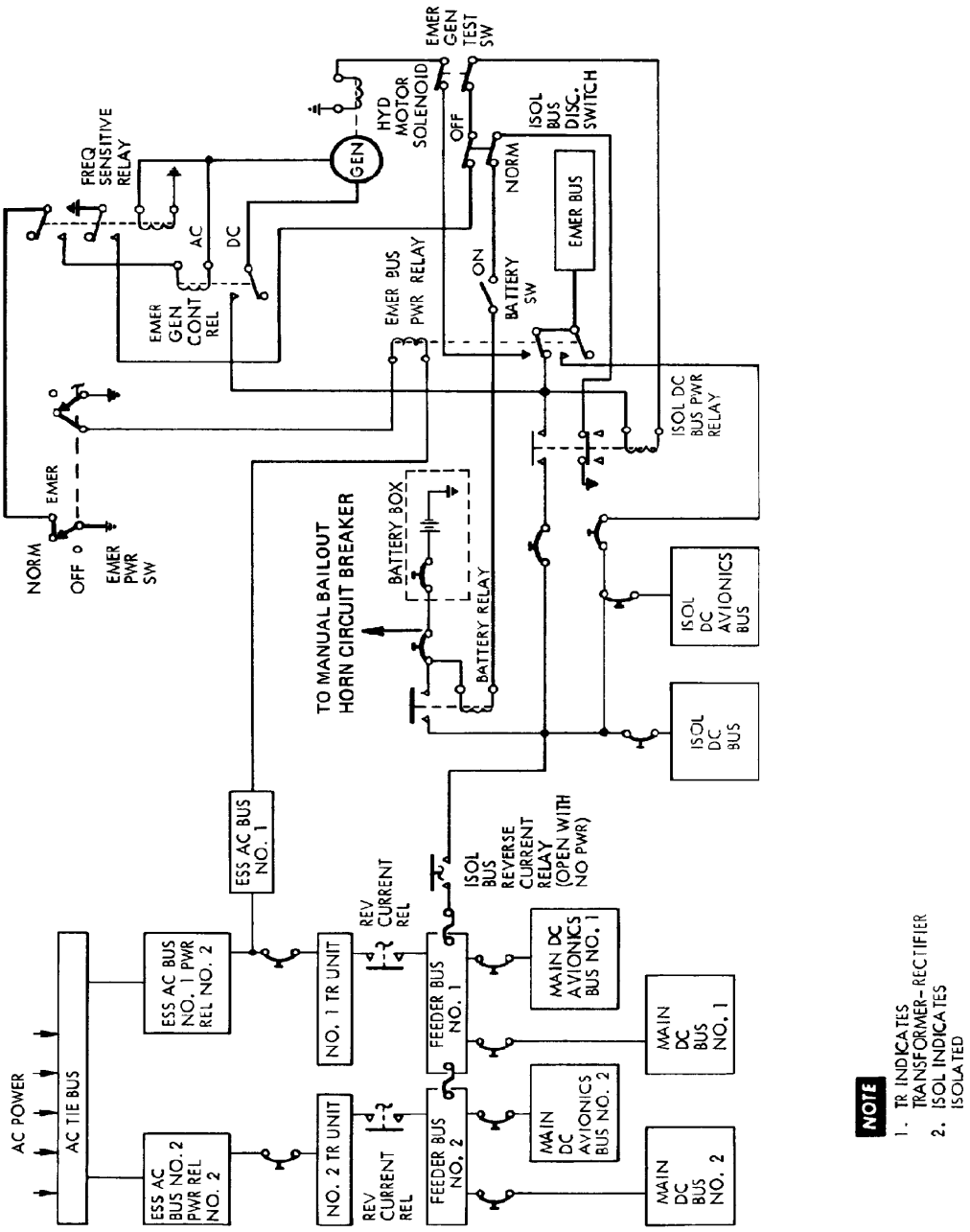

DC Electrical System Block Diagram

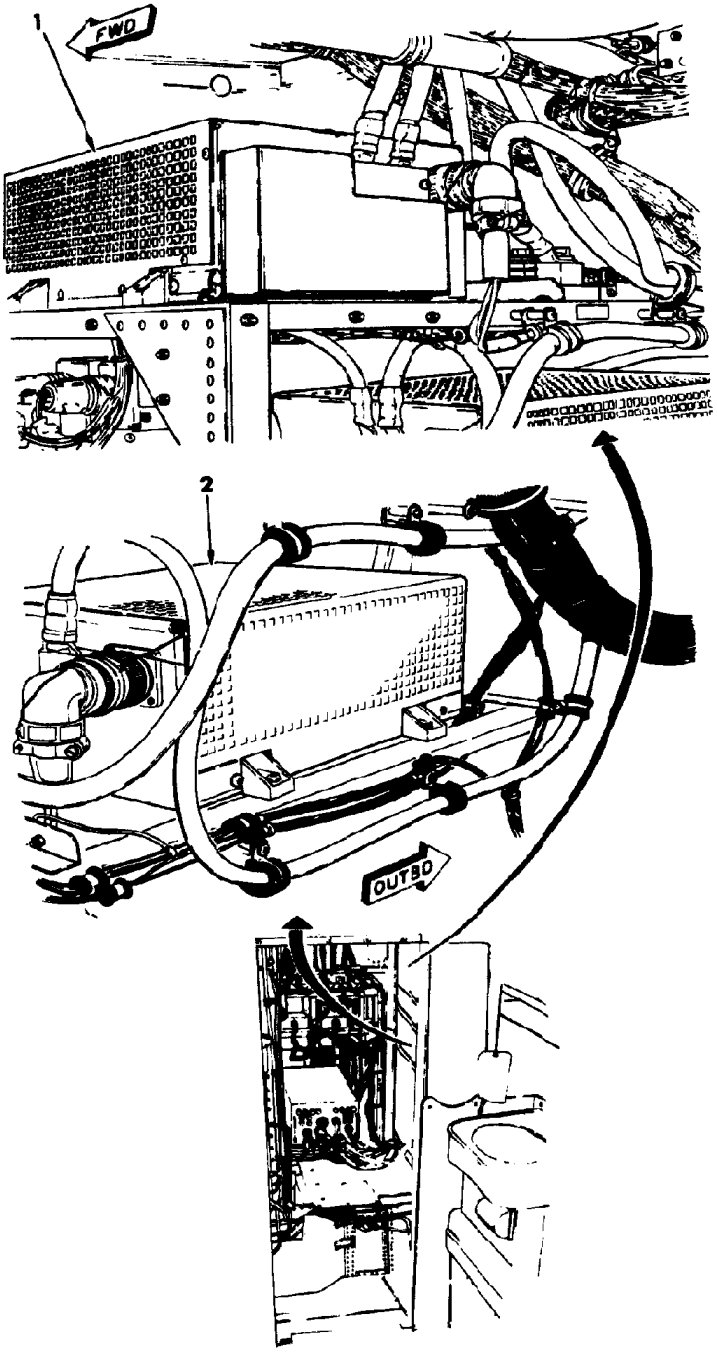

(LATRINE AREA, LOOKING FWD)
1. TRANSFORMER-RECTIFIER NO. 1
2. TRANSFORMER-RECTIFIER NO. 2

Transformer-Rectifier Unit Location

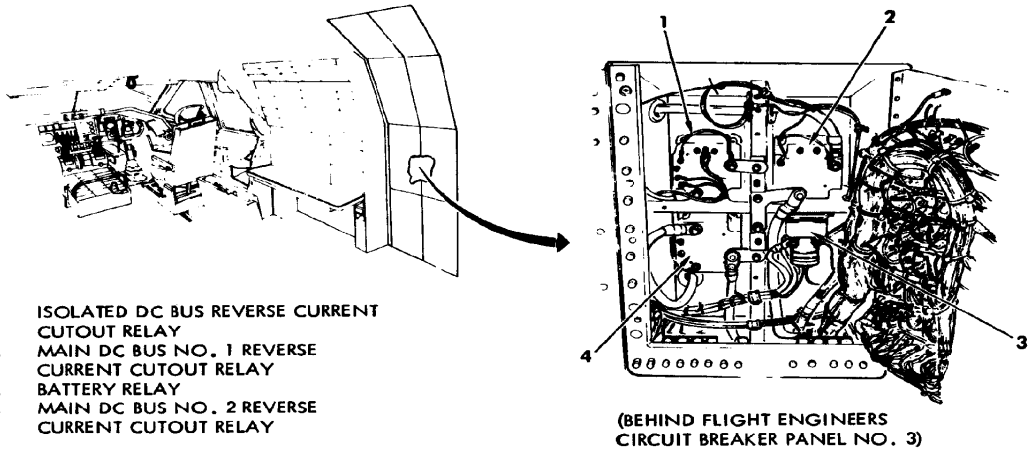

Battery and Reverse Current Cutout Relay Location

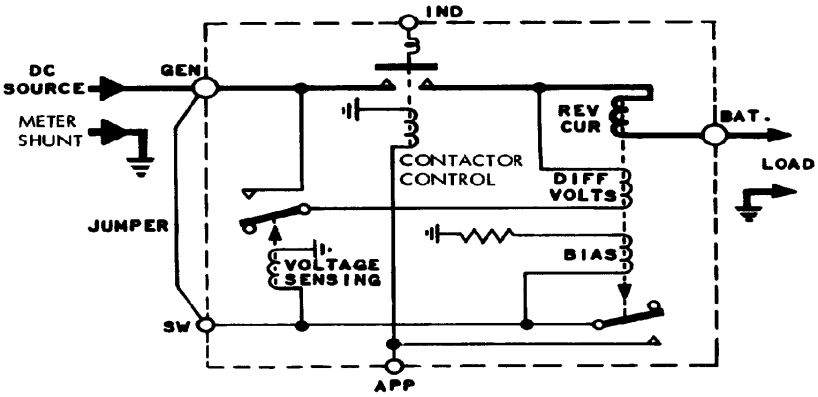

Reverse Current Cutout Relay Internal

Battery and Reverse Current Cutout Relay Location and Schematic Diagram

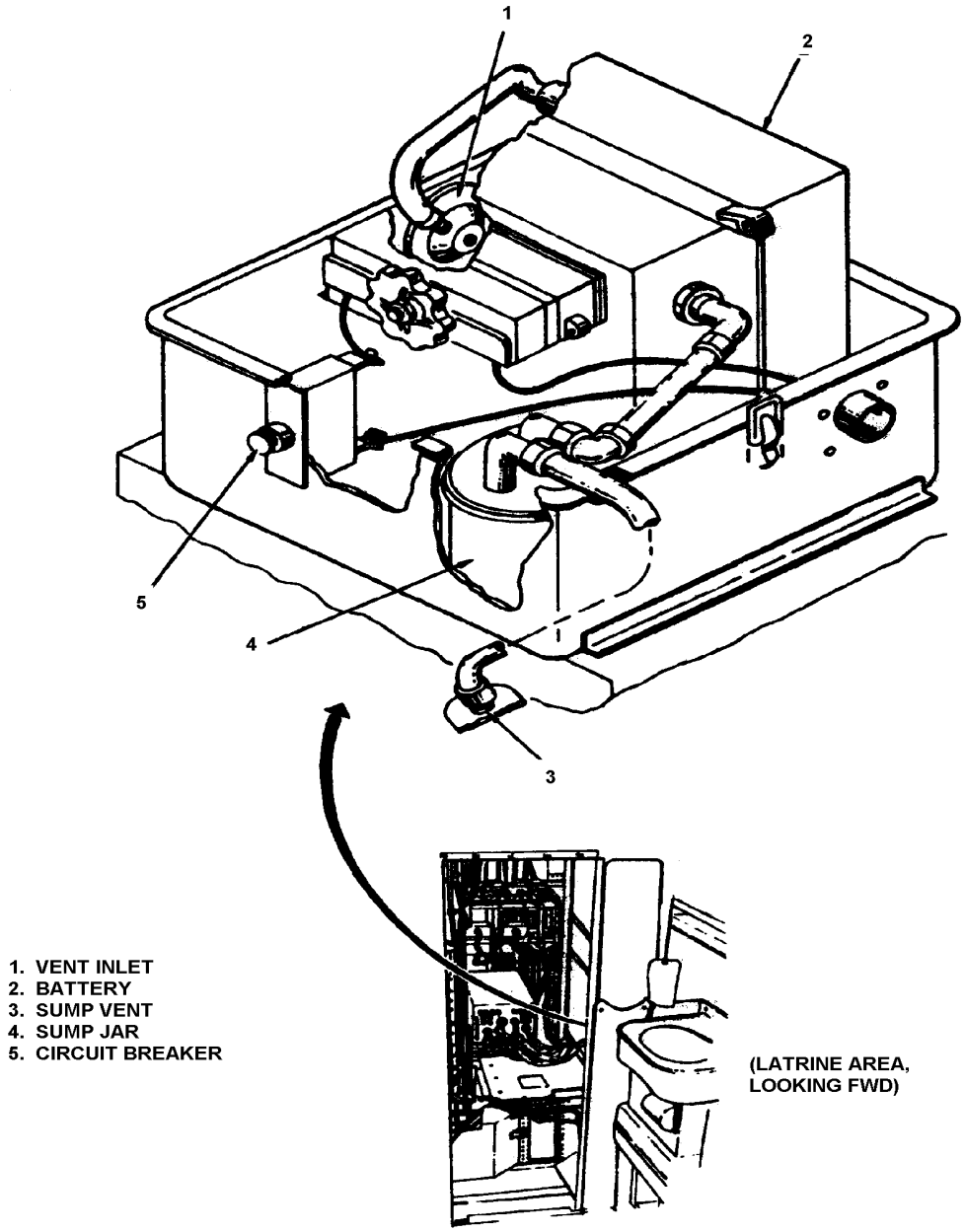

Battery Location

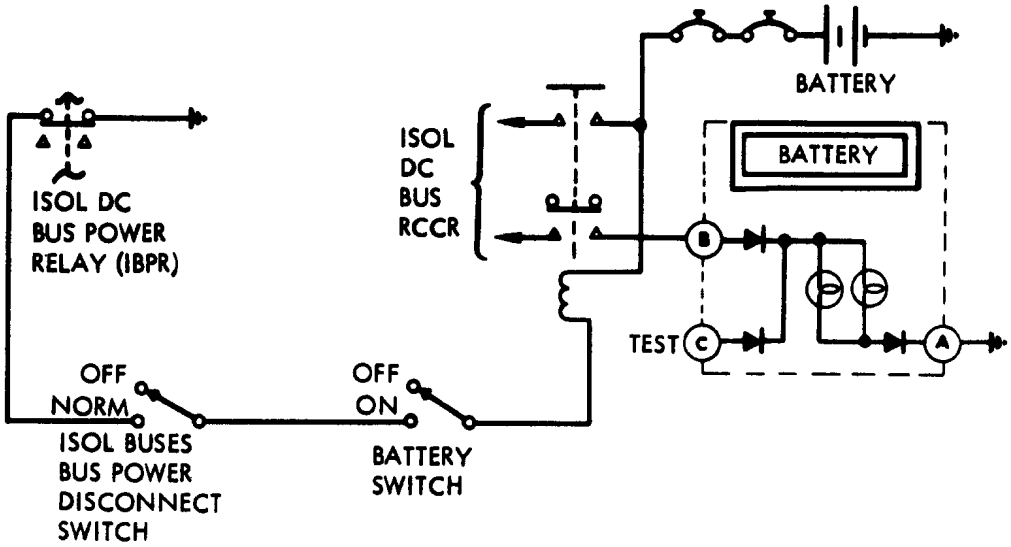

Battery Light Control Simplified Schematic Diagram

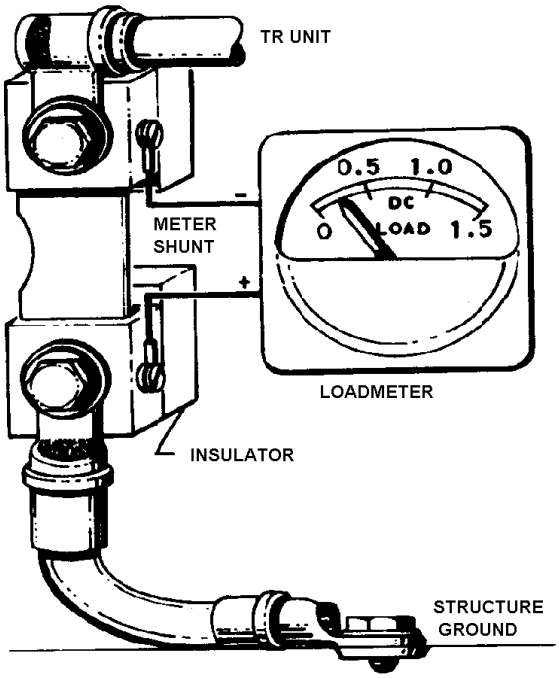

LOAD METER

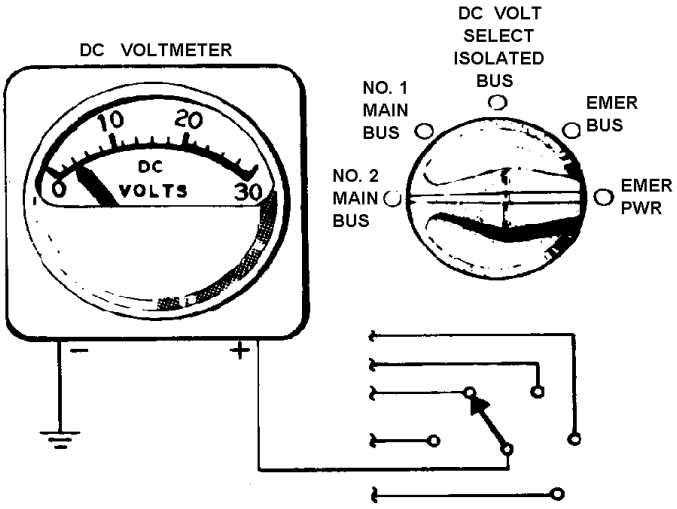

VOLT METER

DC Meter Control Circuits

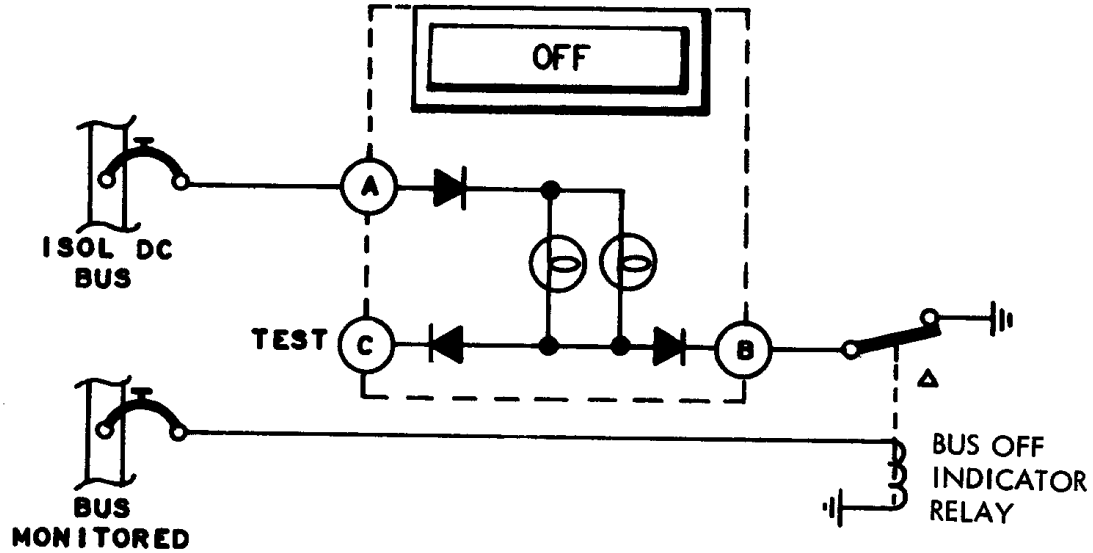

MAIN DC BUS OFF LIGHT

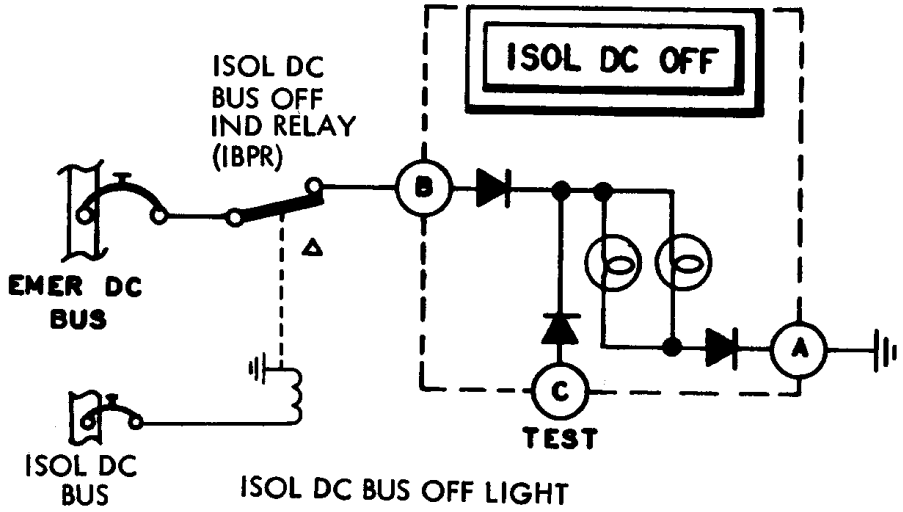

ISOL DC BUS OFF LIGHT

DC Bus OFF Light Control Simplified Schematic Diagram

External Power System

Power from an external AC power source can be supplied to all AC buses. Normally, external power will be used for ground checkout. The external power unit should be capable of supplying 50 KVA, three-phase, 115/200-VAC, 400-Hz power. Phase sequencing must match that of the airplane's generators (A, B, C). Incorrect phase sequence or loss of a phase prevents use of external power on the airplane. External DC power is not required since it will be generated internally by the transformer-rectifiers. External and auxiliary power cannot be used at the same time. Neither will parallel with any other power source. The external power system includes a receptacle, external power contactor, part of the bus protection panel, and associated controls and indicators.

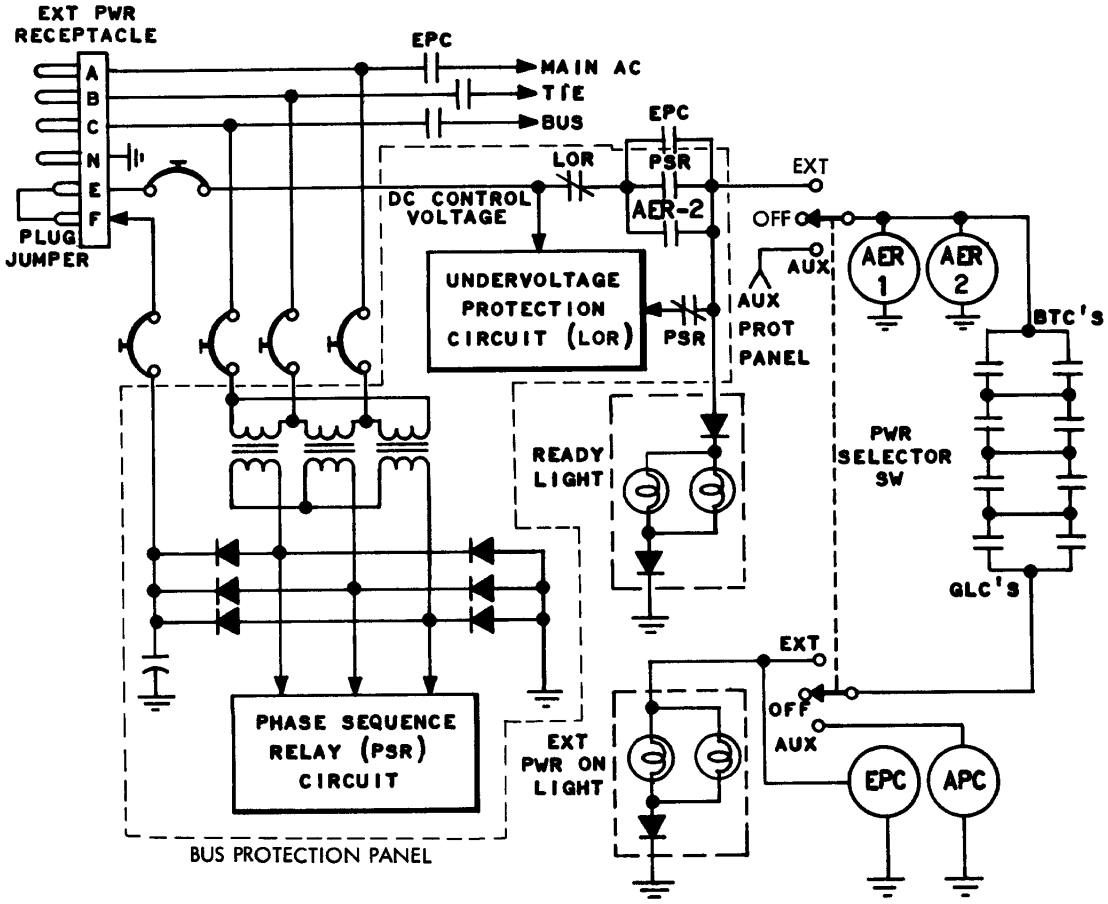

External Power Simplified Schematic Diagram

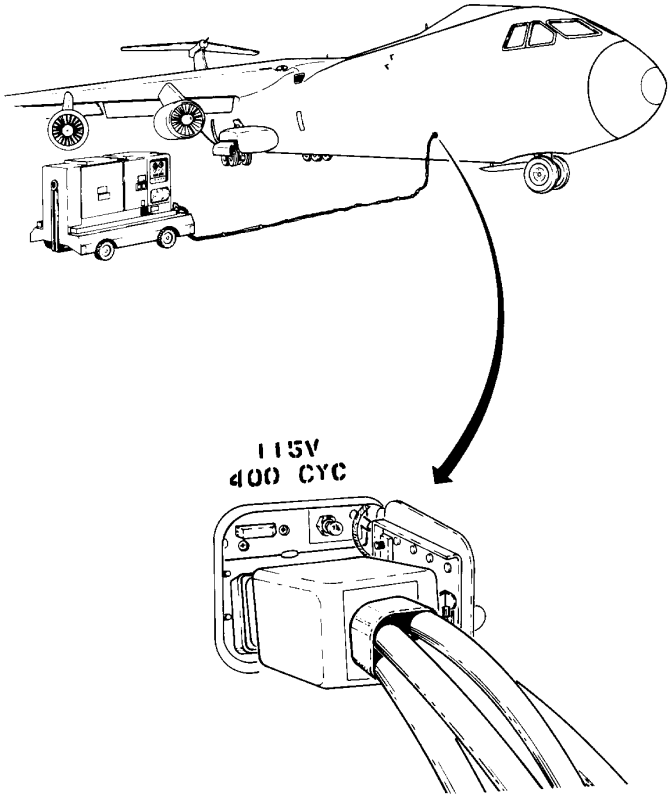

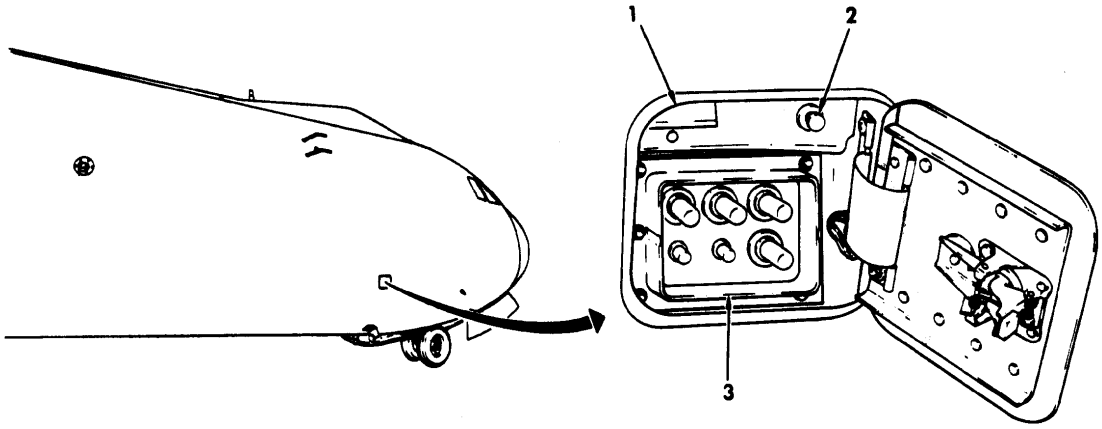

1. EXT PWR ON LIGHT
2. EXT POWER CONTROL CIRCUIT BREAKER
3. EXTERNAL POWER RECEPTACLE

External Power Receptacle

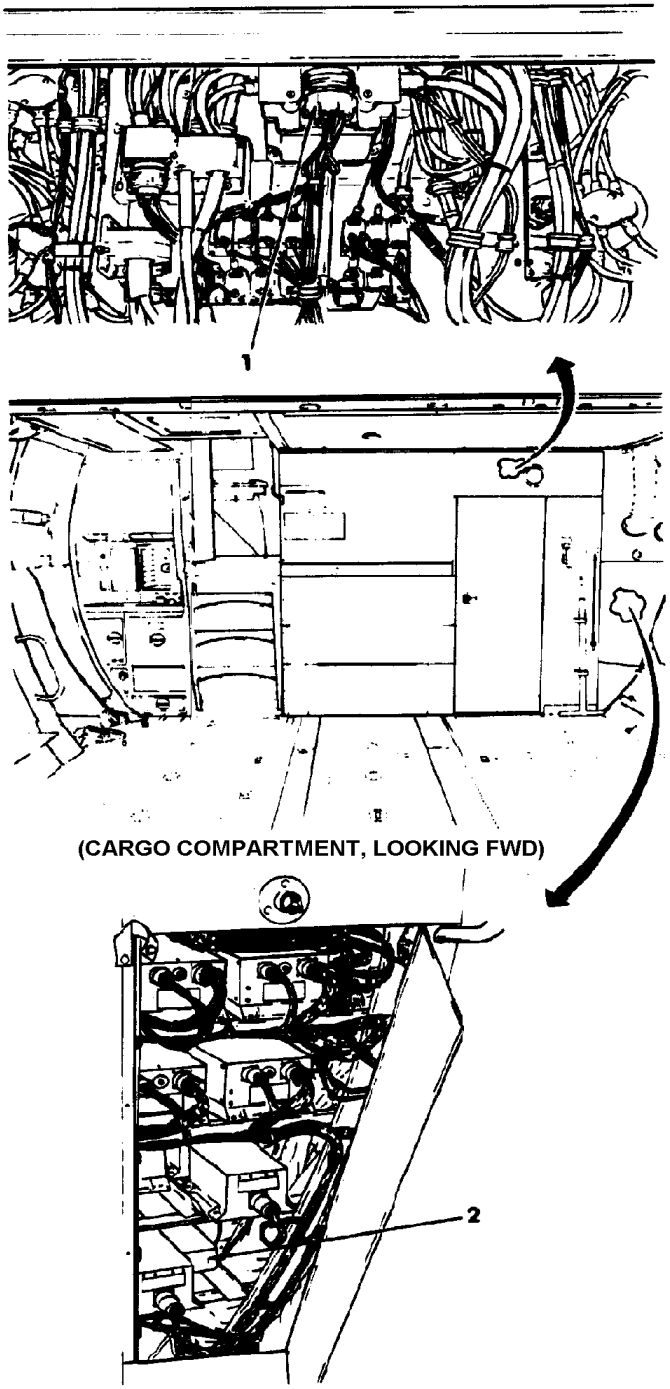

1. EXTERNAL POWER CONTRACTOR (EPC-APC)
2. BUS PROTECTION PANEL

External Power Contactor and Bus Protection Panel (BPP)

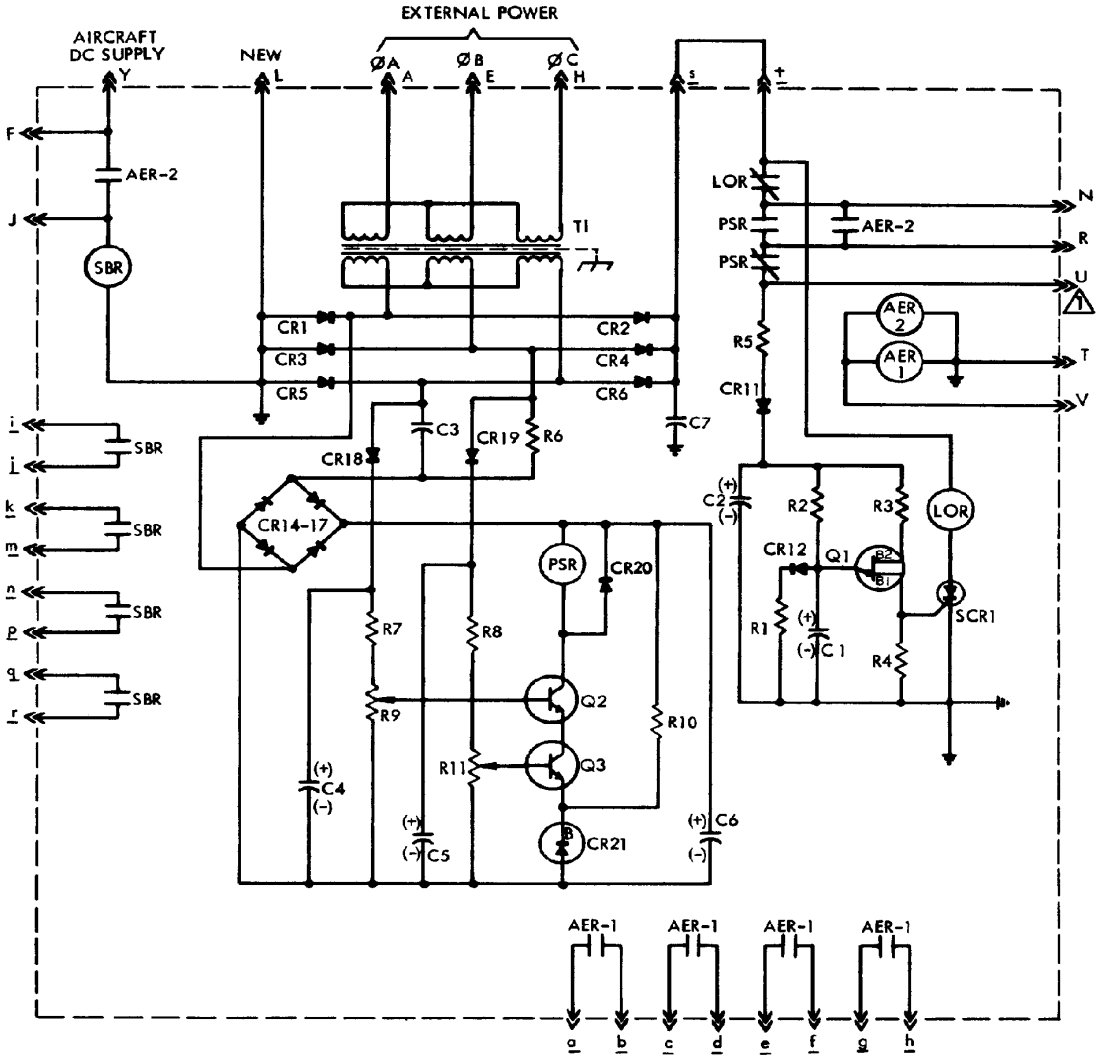

NOTE

⚠ PIN U IS TEST POINT

NOMENCLATURE

PSR	PHASE SEQUENCE RELAY
SBR	SYNC BUS RELAY
AER	AUX EXTERNAL POWER RELAY
LOR	LOCKOUT RELAY
APC	AUX POWER CONTACTOR

Bus Protection Panel (BPP) Schematic Diagram

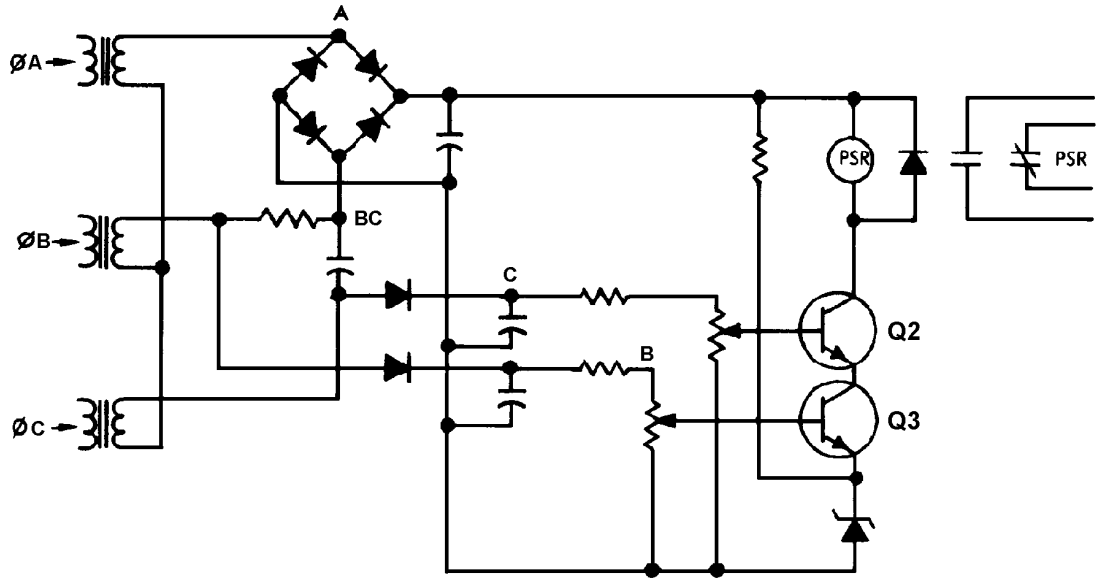

BPP Phase Sequence Circuit

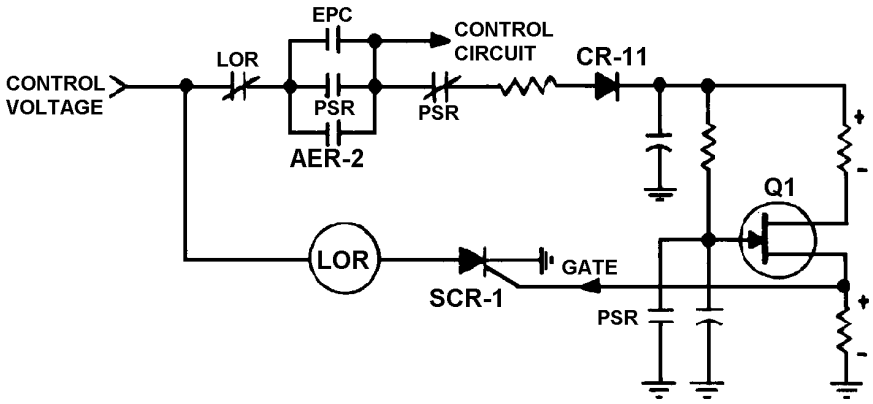

BPP Undervoltage Circuit

Bus Protection Panel (BPP) Phase Sequence and Undervoltage Circuit
Simplified Schematic Diagrams

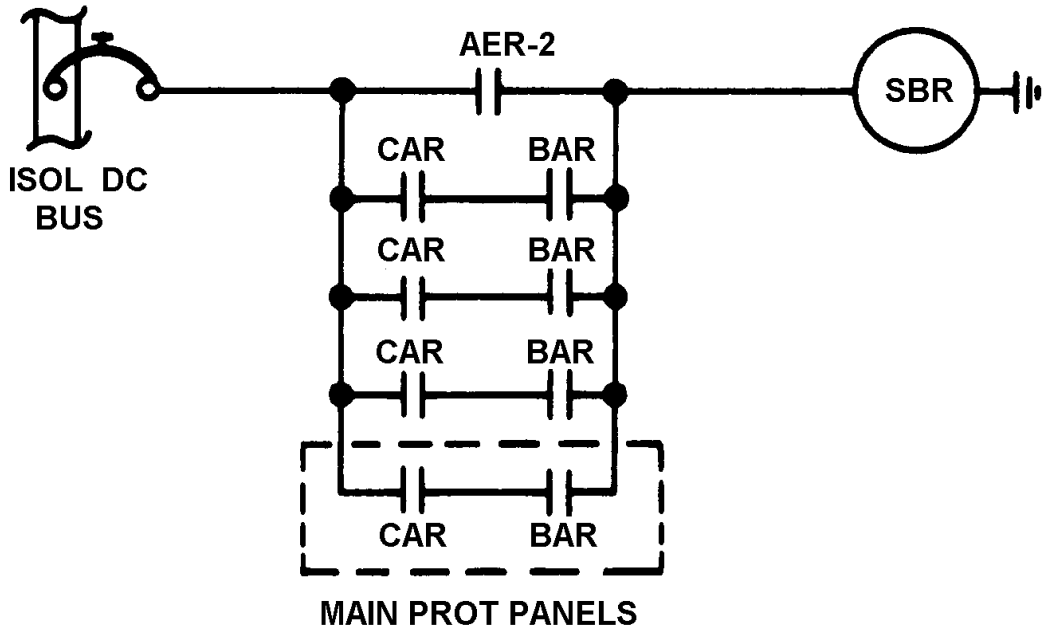

Bus Protection Panel (BPP) Synchronizing Bus Relay Control Simplified Schematic Diagram

Emergency Generation System

The emergency generation system provides AC and DC power if normal power sources fail. The emergency system is automatically energized due to loss of essential AC bus 1 or the emergency DC bus. The emergency system can be manually activated during other emergencies. The emergency system has priority over the normal power sources to supply the isolated and emergency buses. Emergency power cannot be used to supply other buses or to charge the battery. The emergency system is powered by the No. 2 hydraulic system. The major components of the system include the emergency generator, hydraulic motor, control solenoid and shutoff valve, frequency sensitive relay, and control switches and related circuitry.

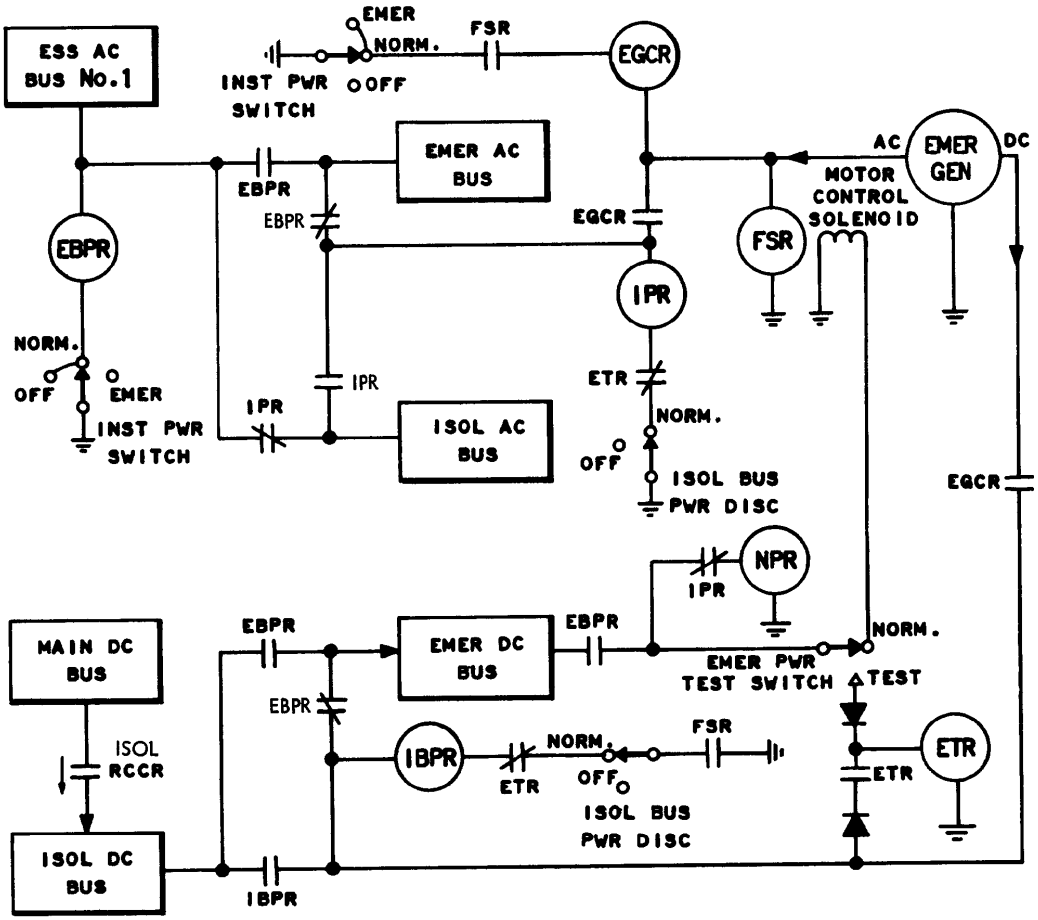

Emergency Generator Control Simplified Schematic Diagram

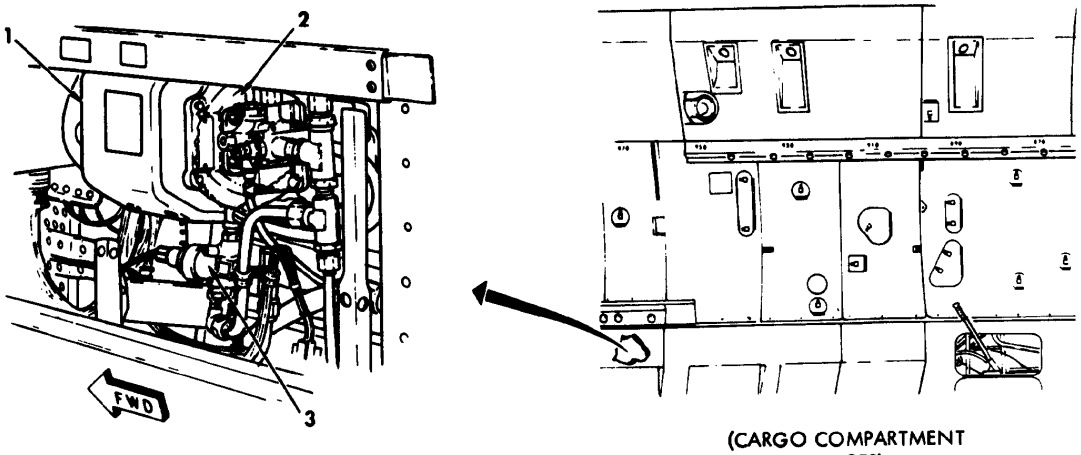

1. EMERGENCY GENERATOR
2. HYDRAULIC MOTOR
3. SOLENOID-OPERATED SHUTOFF (CONTROL) VALVE

(CARGO COMPARTMENT LH SIDE, FS 978)

Emergency Generator Location

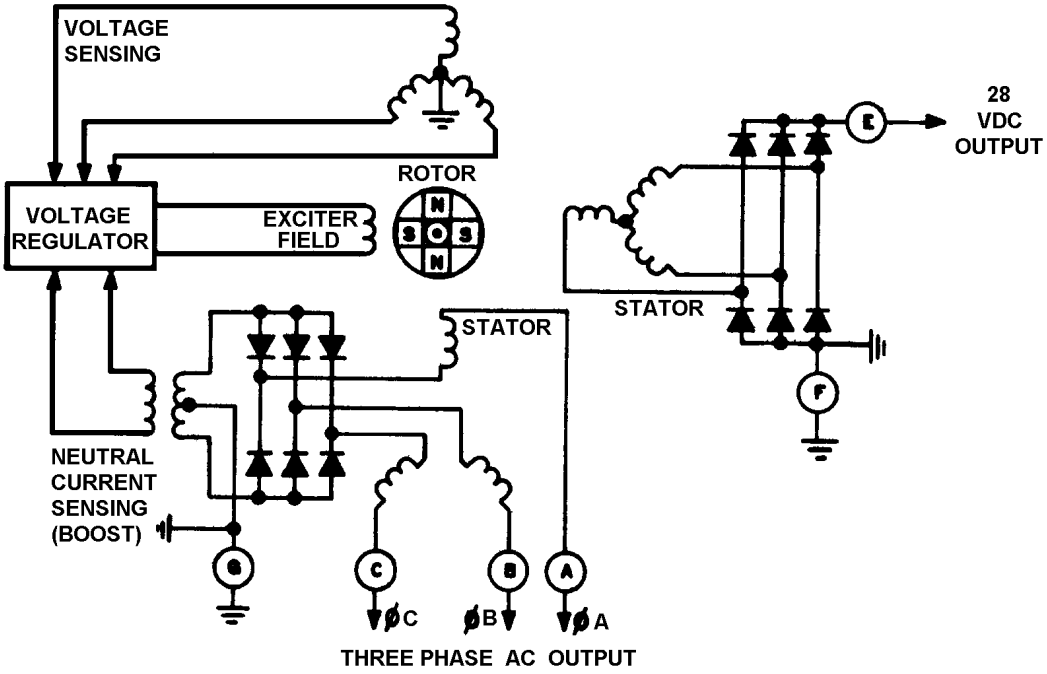

Emergency Generator Simplified Schematic Diagram

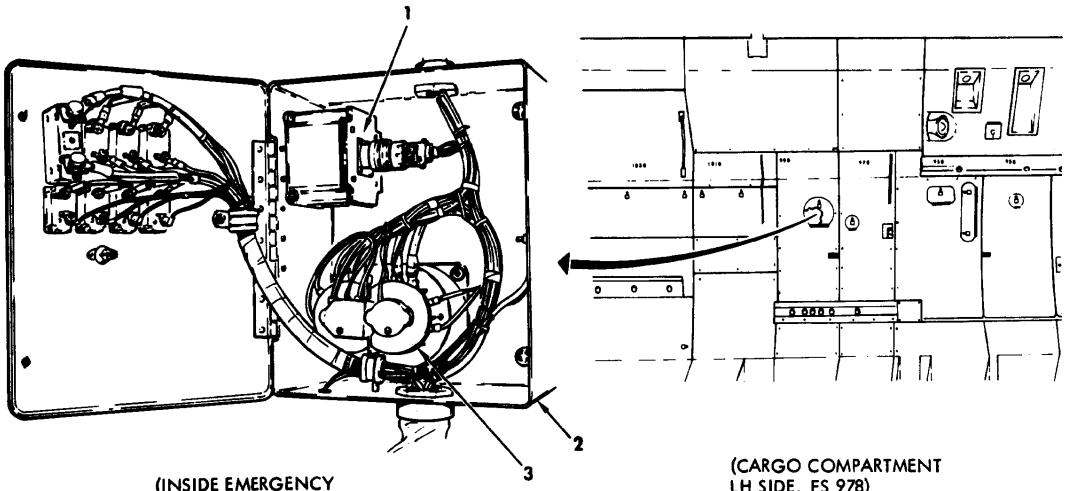

(INSIDE EMERGENCY GENERATOR CONTROL BOX)

(CARGO COMPARTMENT LH SIDE, FS 978)

1. FREQUENCY SENSITIVE RELAY
2. EMERGENCY GENERATOR CONTROL BOX
3. EMERGENCY GENERATOR CONTROL RELAY

Frequency Sensitive and Emergency Generator Control Relays Location

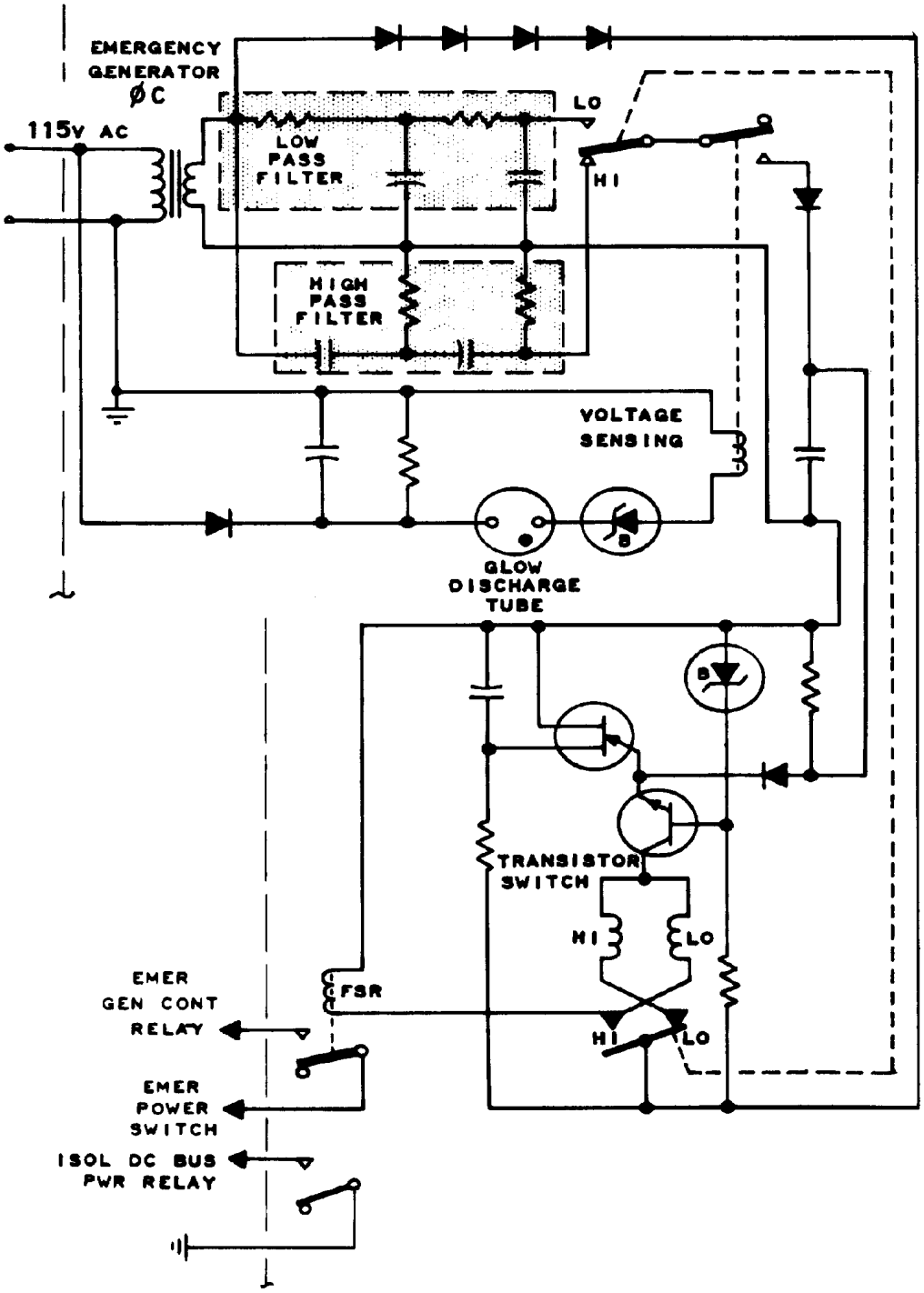

Internal Frequency Sensitive Relay Simplified Schematic Diagram

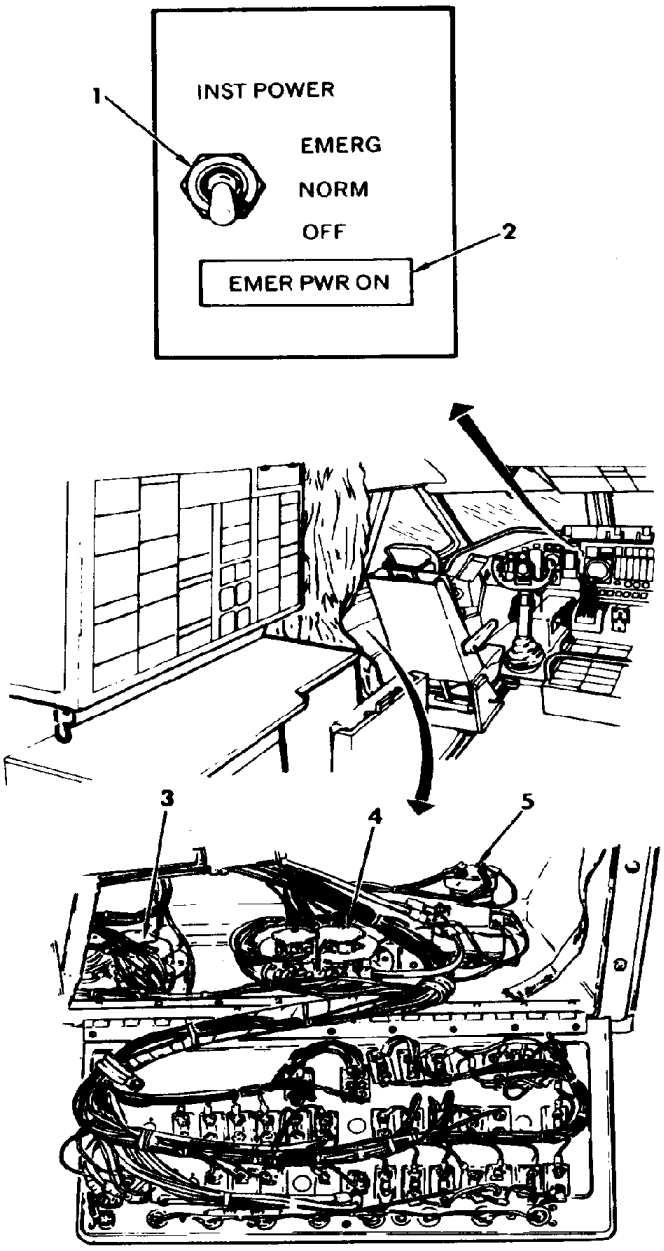

(INSIDE EMERGENCY
CIRCUIT BREAKER PANEL)

1. INST POWER SWITCH
2. EMER PWR ON LIGHT
3. ISOL AC BUS POWER RELAY
4. EMER BUS POWER RELAY
5. ISOL DC BUS POWER RELAY

Instrument Power Switch and Emergency Circuit Breaker Panel Relays

EQUIPMENT AND FURNISHINGS

General Description

Equipment and furnishings in the airplane ensure maximum accommodation for flight crew members. Facilities necessary to accomplish the assigned mission of the airplane are also provided. Equipment and furnishings for crew use include flight station equipment, a galley, and a lavatory. Mission-oriented features include cargo handling equipment, hardware installed in the cargo compartment, and emergency equipment for crew and personnel. Special equipment is included for aerial delivery of cargo. Provisions also exist for rigging the airplane as a troop or paratroop carrier, and for air evacuation missions.

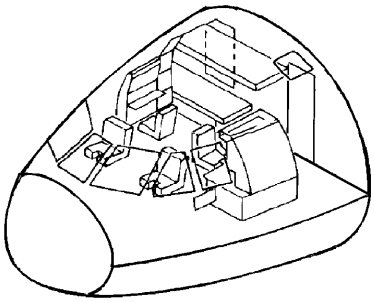

FLIGHT STATION

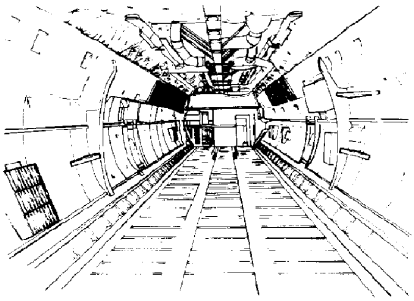

AFT CARGO COMPARTMENT
(LOOKING FWD)

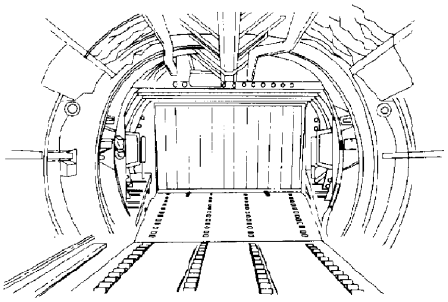

AFT CARGO COMPARTMENT
(LOOKING AFT)

Flight Station and Cargo Compartment

Flight Station Equipment

Flight station equipment supports primary flight crew members in the performance of their duties. The equipment consists of crew member seats, work tables, consoles, and stowage compartments. Accommodations for auxiliary crew members include seats, bunks, and restraint seat backs. General flight station equipment includes three types of seats and two bunks: upper and lower, for relief crew members. Side consoles at the pilot's and copilot's positions contain oxygen mask regulators and various control panels. An additional console containing an oxygen regulator is installed at the auxiliary crew seat area. Map case and stowage compartments are provided for the pilot, copilot, and navigator. An additional stowage compartment is located beneath the lower bunk. Work tables are located at the navigator's and flight engineer's stations. Additional equipment and installations include an electrical spares box, scupper and seal installation, and G-file (technical order) stowage. Environmental equipment includes sun visors, glareshields, and various curtains for light restriction and privacy.

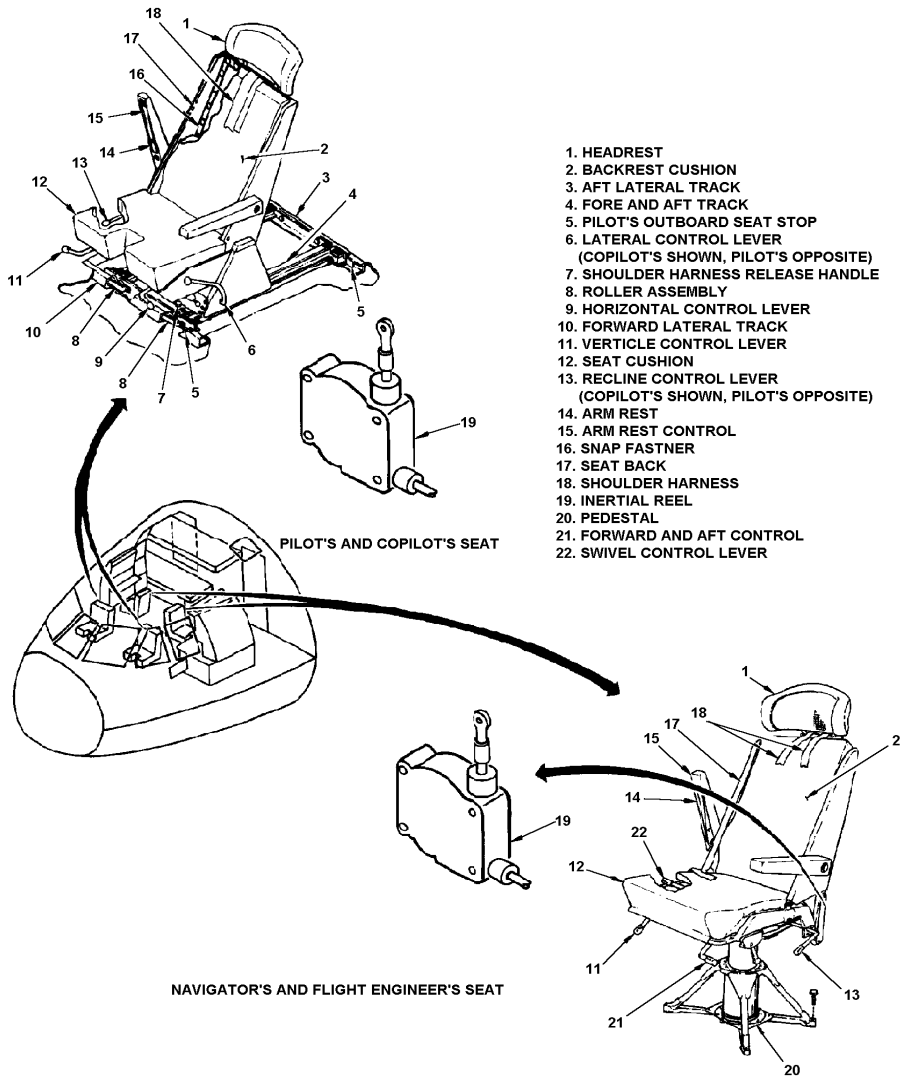

Flight Station Seats (Sheet 1 of 2)

23. SEAT BACK
24. ARMREST
25. SEAT SUPPORT
26. ASHTRAY
27. STEP PAD
28. SEAT CUSHION
29. RECLINE CONTROL LEVER
30. FLIGHT CHECK SEAT

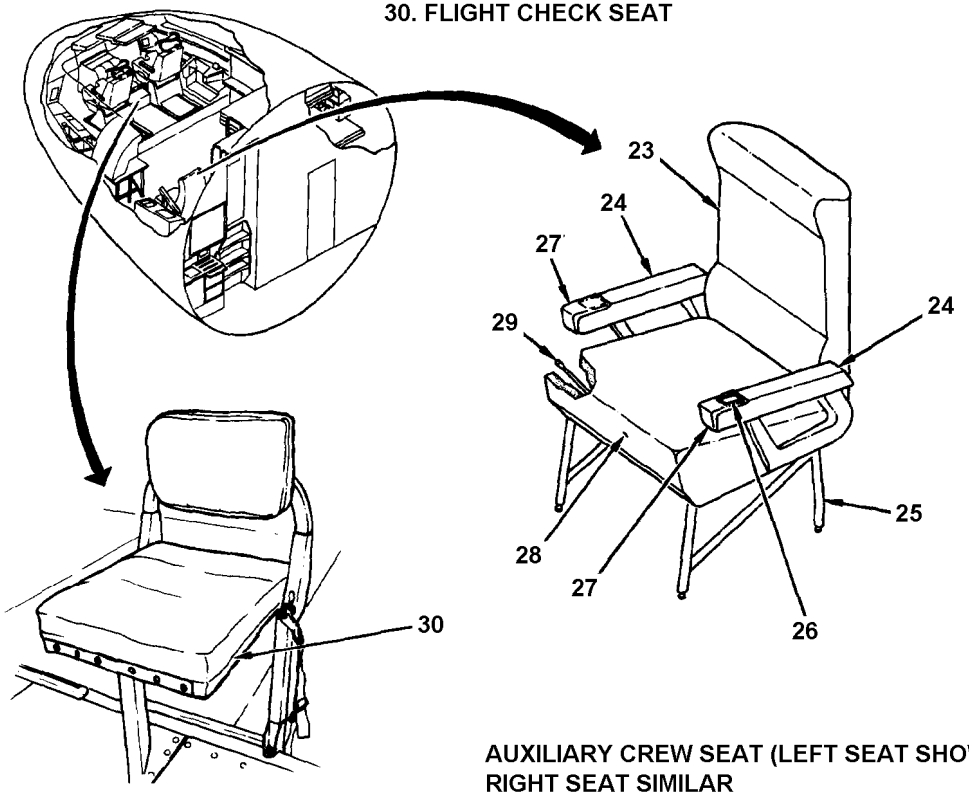

AUXILIARY CREW SEAT (LEFT SEAT SHOWN
RIGHT SEAT SIMILAR

Flight Station Seats (Sheet 2 of 2)

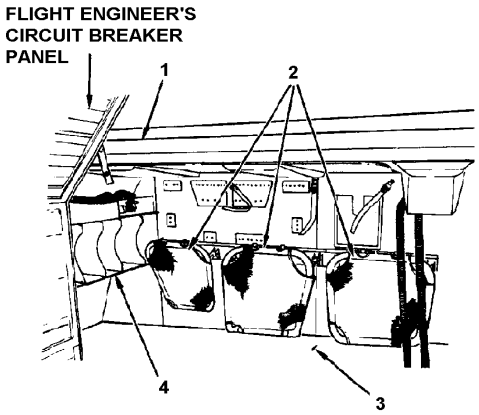

FLIGHT STATION RELIEF
CREW SEATS AND BUNKS
(LOOKING AFT)

1. UPPER RELIEF CREW BUNK
2. SEAT BACKS
3. LOWER RELIEF CREW BUNK
4. G-FILE

RELIEF CREW BUNKS AND SEAT BACKS

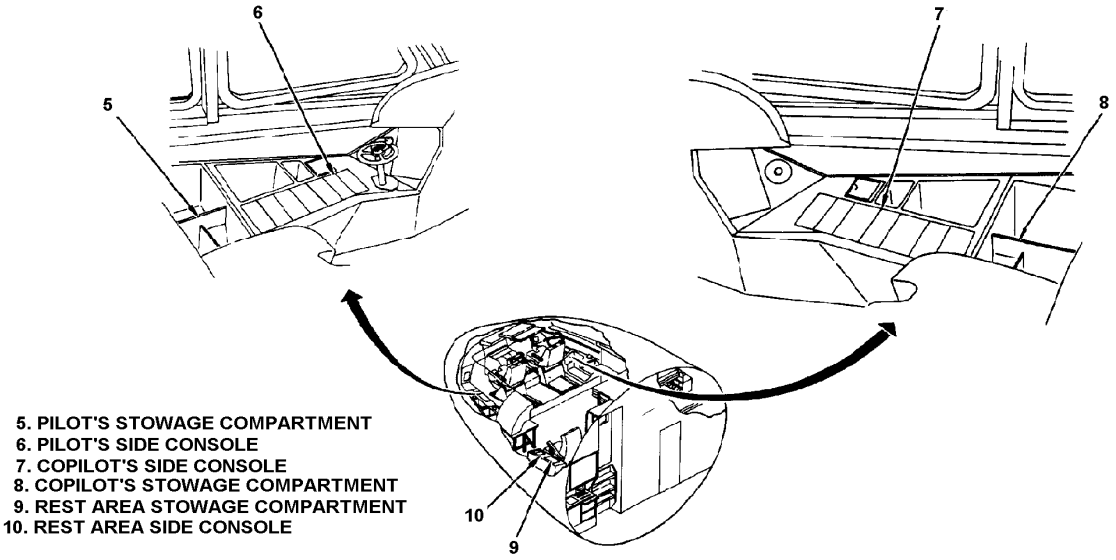

5. PILOT'S STOWAGE COMPARTMENT
6. PILOT'S SIDE CONSOLE
7. COPILOT'S SIDE CONSOLE
8. COPILOT'S STOWAGE COMPARTMENT
9. REST AREA STOWAGE COMPARTMENT
10. REST AREA SIDE CONSOLE

SIDE CONSOLES AND STOWAGE AREAS

General Flight Station Equipment

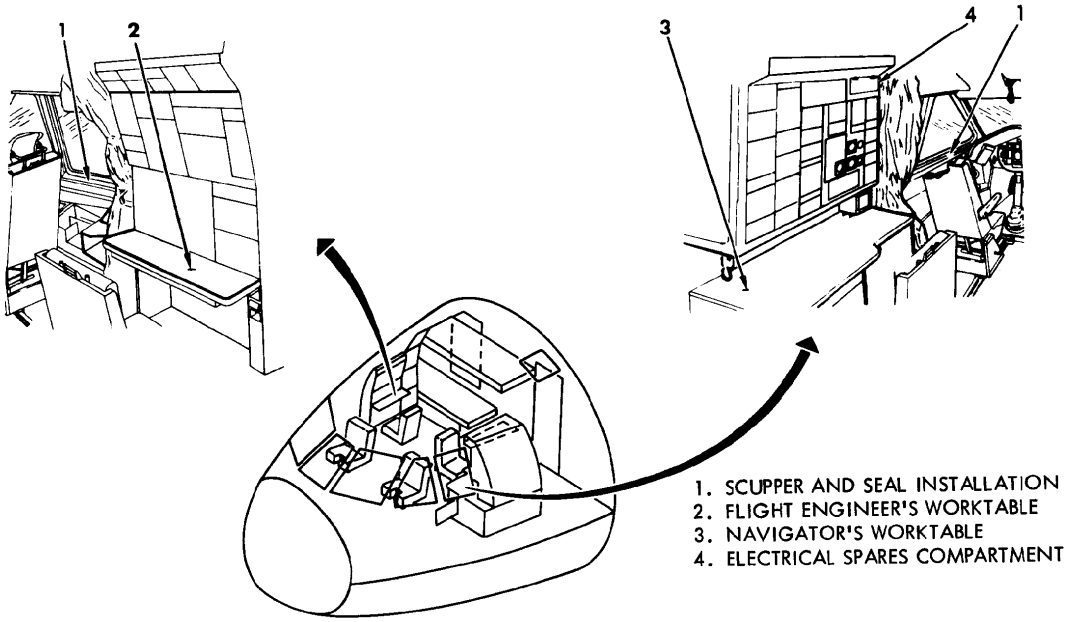

Work Tables, Electrical Spares Box, and Scupper and Seal Installation

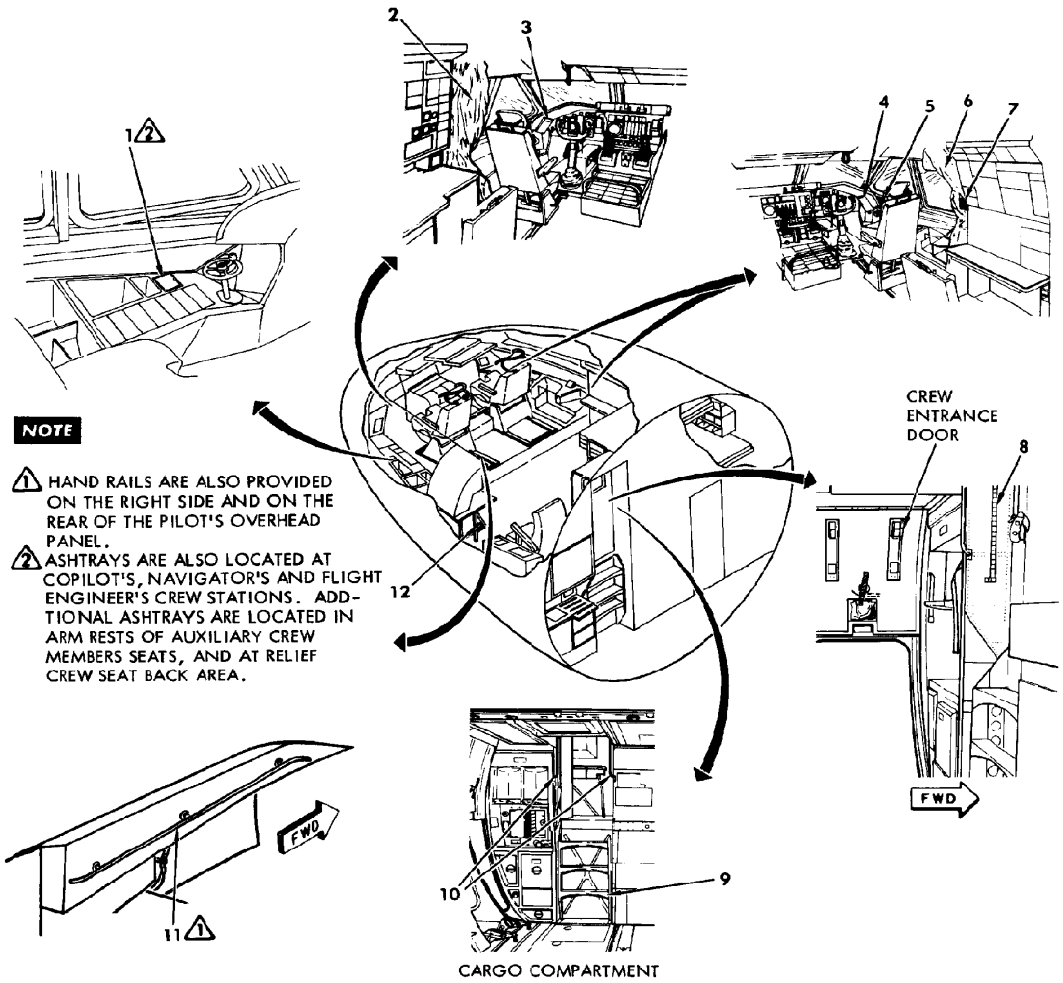

1. PILOT'S ASHTRAY
2. PILOT'S CURTAIN
3. PILOT'S LET DOWN CHART HOLDER
4. COPILOT'S LET DOWN CHART HOLDER
5. COPILOT'S CHECK LIST
6. COPILOT'S CURTAIN
7. FLIGHT ENGINEERS CHECK LIST
8. FUEL TANK DIP STICK
9. FLIGHT STATION LADDER
10. ASSIST HANDLES
11. FLIGHT STATION HAND RAIL (LEFT SIDE)
12. CUPHOLDER (7 TYPICAL)

Miscellaneous Flight Station Equipment (Sheet 1 of 2)

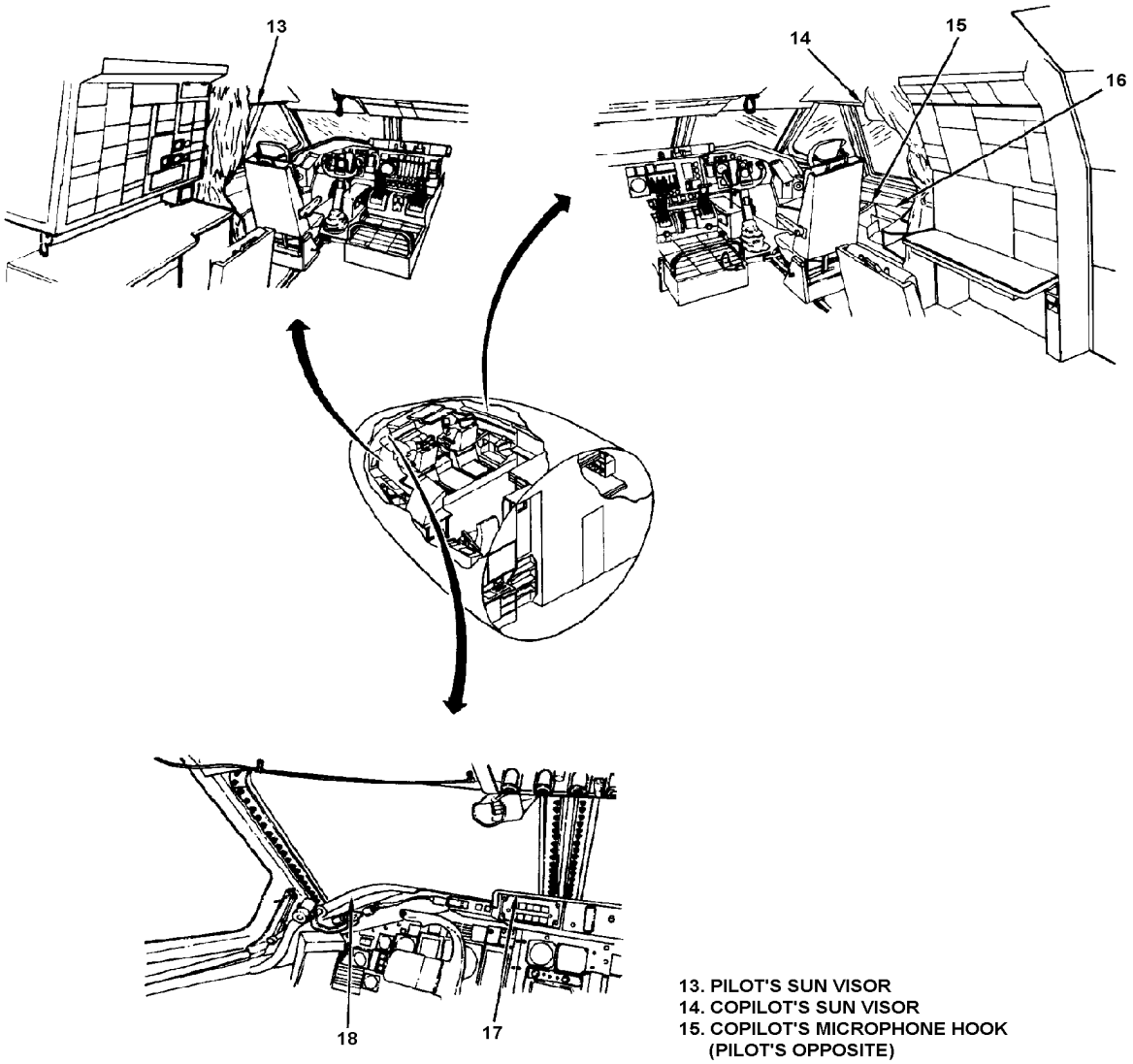

PILOT'S GLARESHIELD SHOWN
COPILOT'S GLARESHIELD SIMILIAR

13. PILOT'S SUN VISOR
14. COPILOT'S SUN VISOR
15. COPILOT'S MICROPHONE HOOK (PILOT'S OPPOSITE)
16. COPILOT'S HEADSET HOOK (PILOT'S OPPOSITE)
17. CENTER INSTRUMENT PANEL GLARESHIELD
18. PILOT'S INSTRUMENT PANEL GLARESHIELD

Miscellaneous Flight Station Equipment (Sheet 2 of 2)

Galley

The galley, located between the front entrance door and the flight station ladder, maintains the food and beverages for the crew. Provision is also made for crew drinking water. The galley operates on 115 VAC three-phase power from the main AC bus No.2. Major components include an oven, hot cup, hot beverage unit, refrigerator, work counter, waste container, and control panel. Provision is made for stowage of two drinking water tanks.

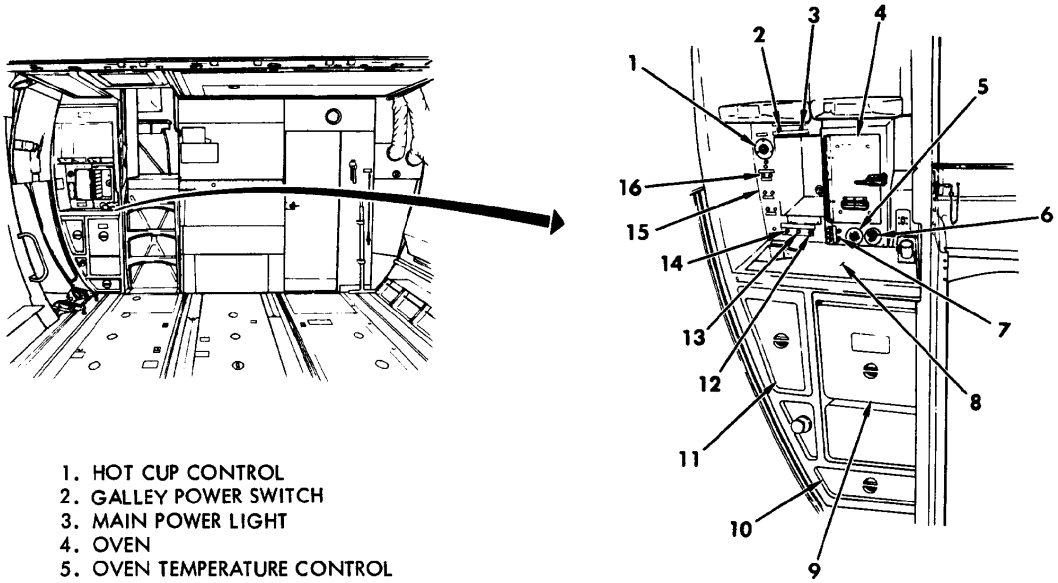

1. HOT CUP CONTROL
2. GALLEY POWER SWITCH
3. MAIN POWER LIGHT
4. OVEN
5. OVEN TEMPERATURE CONTROL
6. OVEN TIMER CONTROL
7. OVEN POWER SWITCH
8. WORK TABLE AND DRAIN
9. REFRIGERATOR
10. STORAGE DRAWER
11. WASTE CONTAINER
12. HOT BEVERAGE SWITCH
13. HOT VEVERAGE INDICATOR LIGHT
14. GALLEY LIGHT SWITCH
15. CIRCUIT BREAKER PANEL (7)
16. HOT CUP ON INDICATOR LIGHT

Galley and Components

Lavatory

The crew lavatory is located on the airplane right side under the flight station floor. The lavatory is accessible from the cargo compartment and is formed by four panels. Major components are a flush-type toilet, wash basin, 5-gallon wash water storage tank, waste water storage tank, and waste paper container. Additional equipment includes an ashtray, paper towel dispenser, tissue holder, mirror, and electric shaver outlet. Provision is made for a portable oxygen bottle.

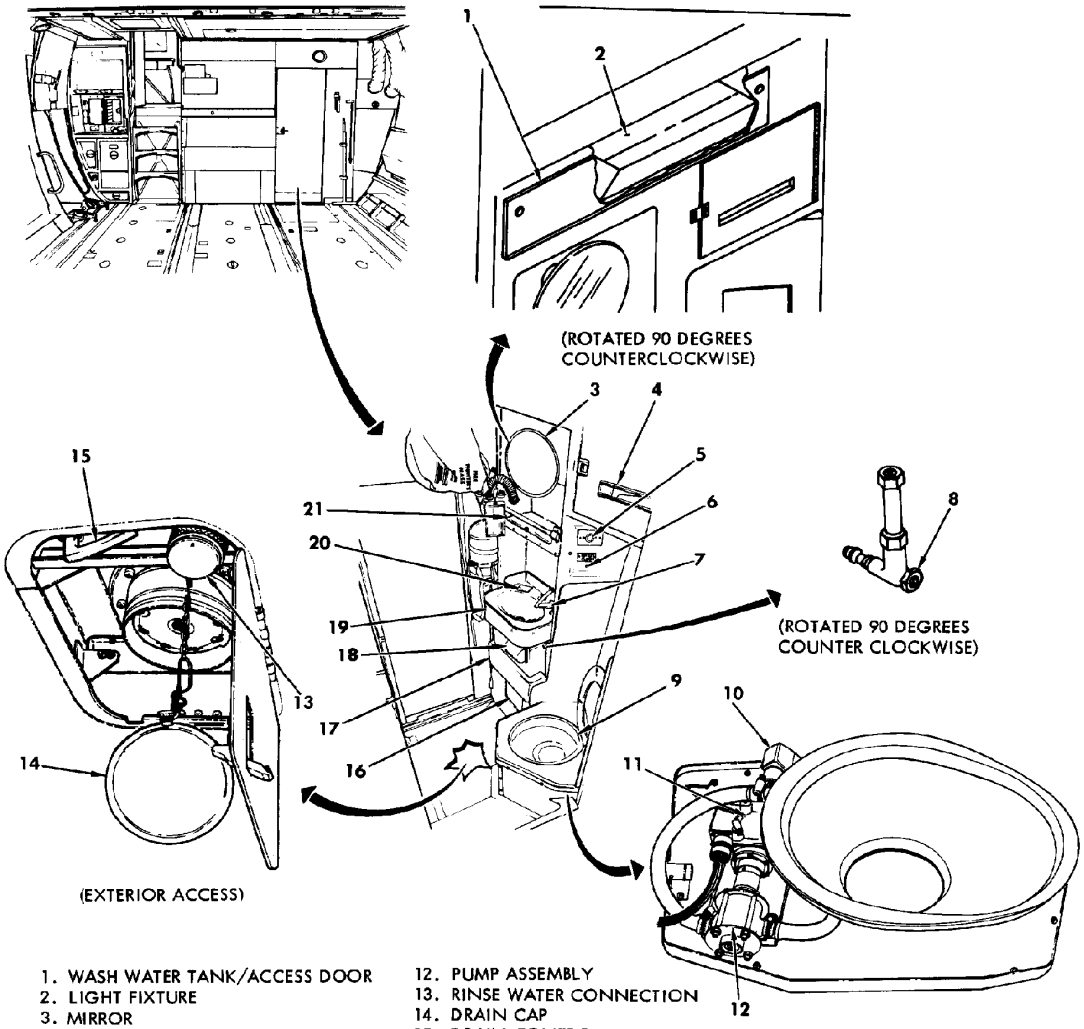

1. WASH WATER TANK/ACCESS DOOR
2. LIGHT FIXTURE
3. MIRROR
4. PAPER TOWEL DISPENSER
5. ELECTRIC SHAVER OUTLET
6. FLUSH BUTTON
7. WATER FAUCET
8. QUICK DISCONNECT TANK FILL FITTING
9. TOILET
10. FILTER ASSEMBLY
11. ACTUATOR MOTOR
12. PUMP ASSEMBLY
13. RINSE WATER CONNECTION
14. DRAIN CAP
15. DRAIN CONTROL
16. TISSUE HOLDER
17. WASTE WATER TANK
18. ASHTRAY
19. WASHBASIN
20. SOAP DISH/COVER
21. TOILET TRAY AND HAND GRIP

Lavatory and Components

Cargo Compartment Equipment

The cargo compartment facilitates moving and securing cargo, and aerial delivery support equipment. Tiedown fittings, receptacles, and restraint equipment are included. Roller conveyors aid in cargo handling. Walkways for personnel movement have special, non-skid material to ensure crew footing. Winches are provided for cargo loading and other applications. The cargo compartment is 93.33 feet long by 10.25 feet wide by 9.08 feet high. The cargo compartment can be rigged to carry general bulk and palletized cargo, vehicles, troops, paratroops and cargo rigged for air drop. Litters can also be installed for air evacuation missions.

Cargo Compartment Floor and Walkways

The cargo floor extends from fuselage station 452 to fuselage station 1292. The floor is constructed of stiffened aluminum panels which interlock at the forward and aft joints. The interlocked panels provide a rigid, continuous surface from the front to the rear of the compartment. Recessed seat and roller conveyor channels and recessed tiedown receptacles run the length of the panels. The cargo ramp panels are the same type construction as the interlocked panels but do not have seat tracks or tiedown receptacles.

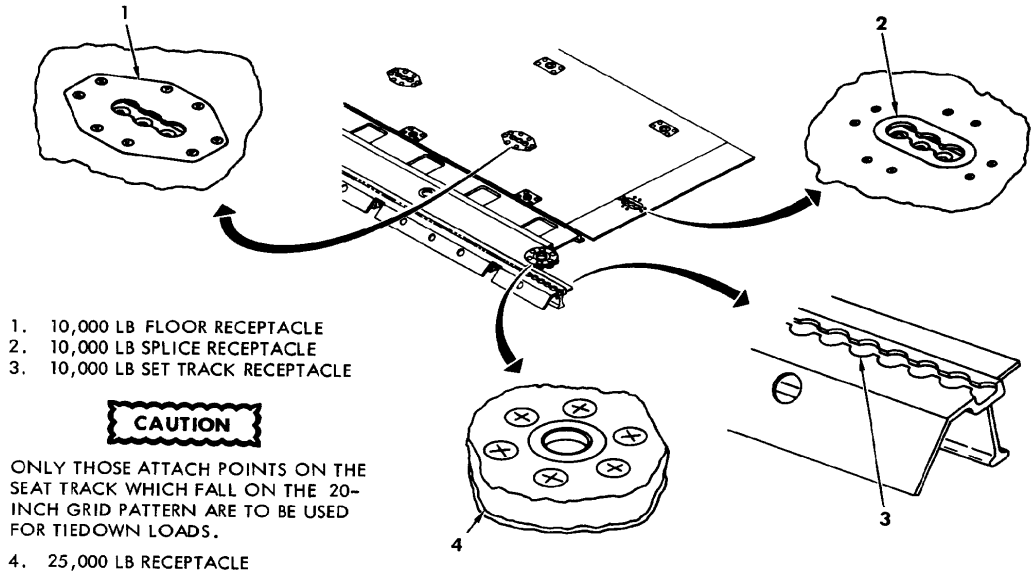

Cargo Floor Receptacles

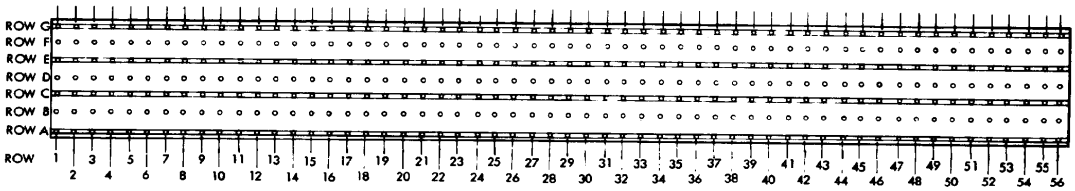

Cargo Floor Receptacle Identification

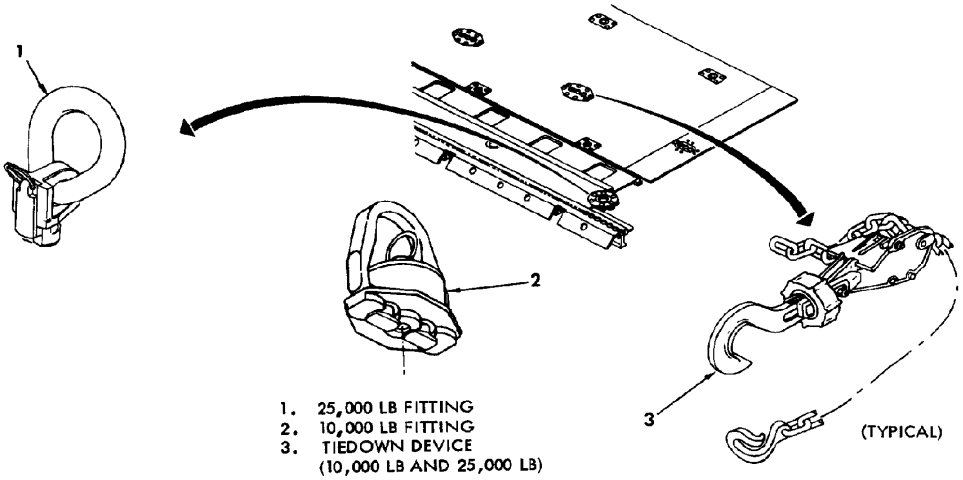

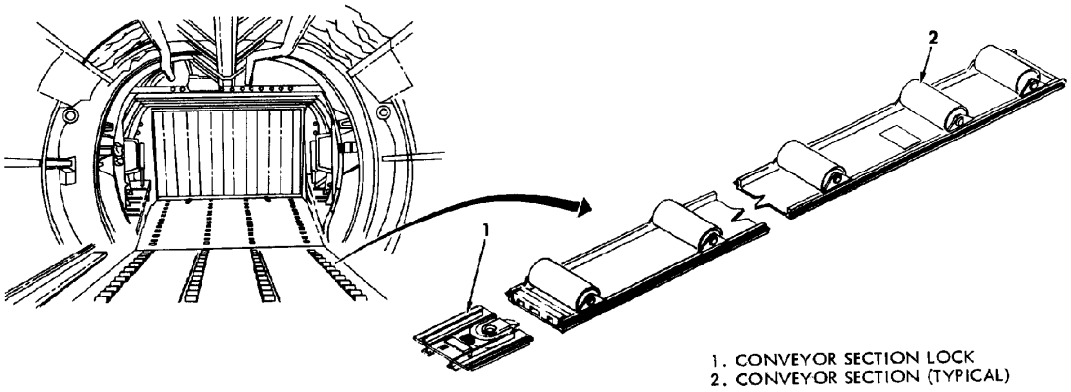

Cargo Tiedown Fittings and Roller Conveyors

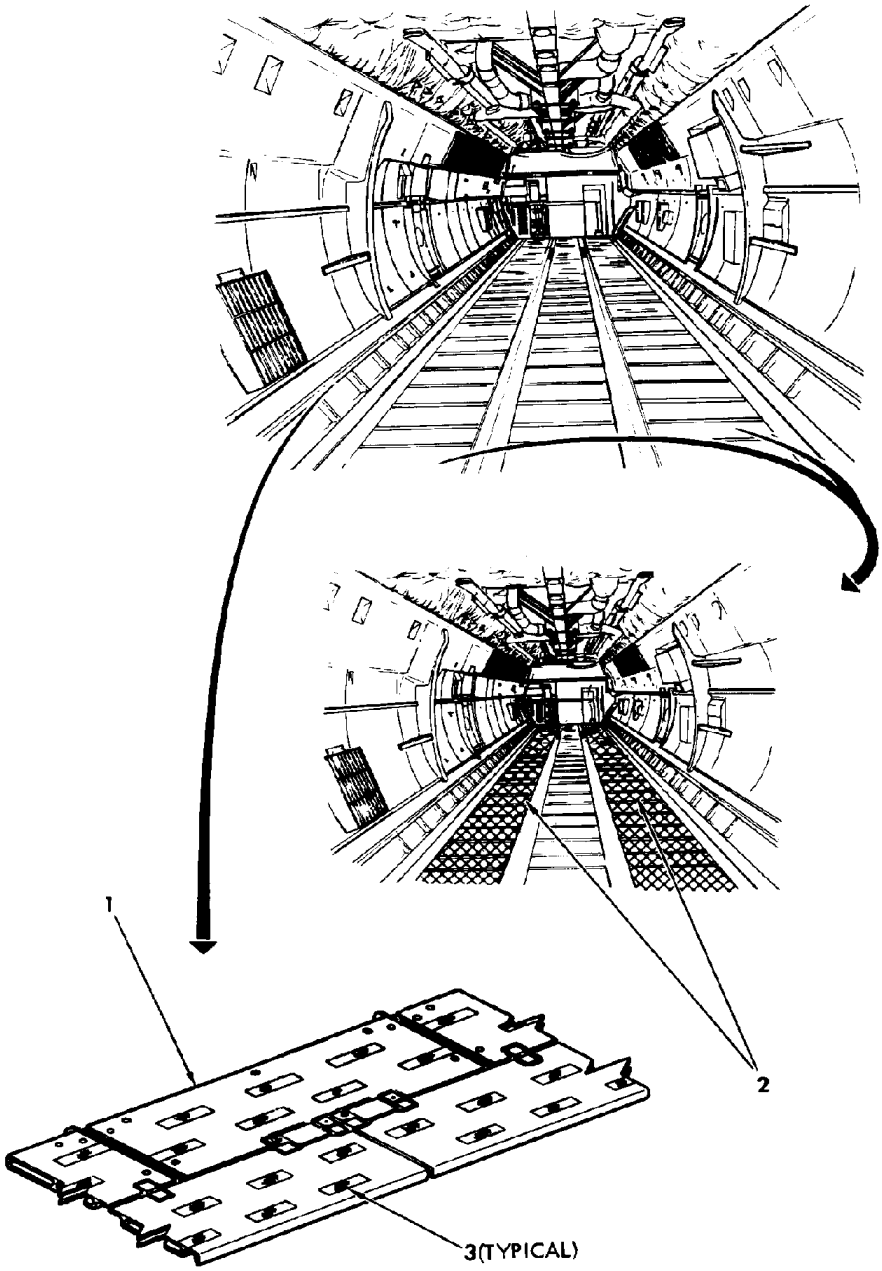

1. CARGO COMPARTMENT WALKWAY
2. VEHICLE TREADWAY AREA
3. NON-SKID SAFETY WALK

Cargo Compartment Floor and Walkway

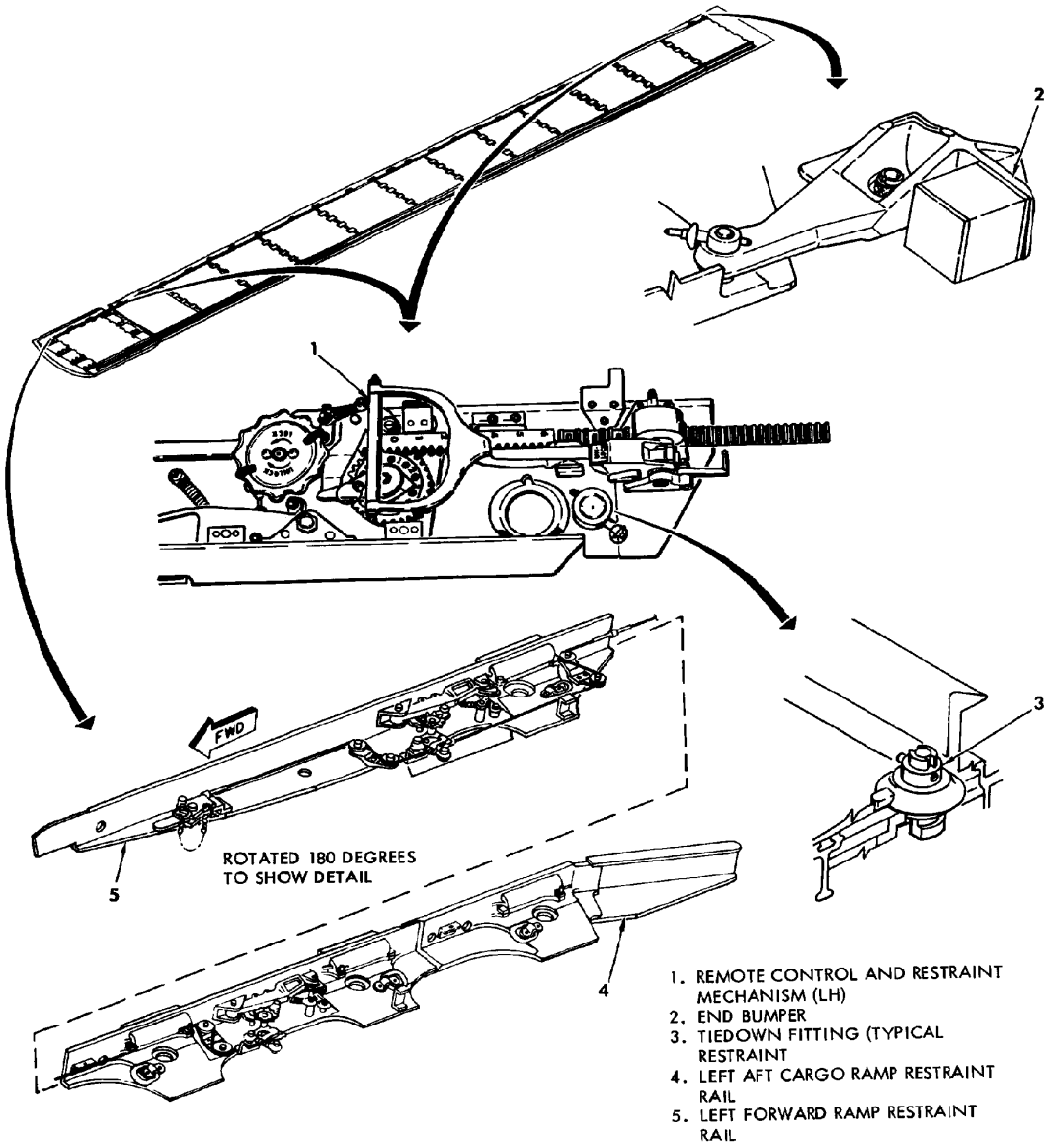

Restraint Rails

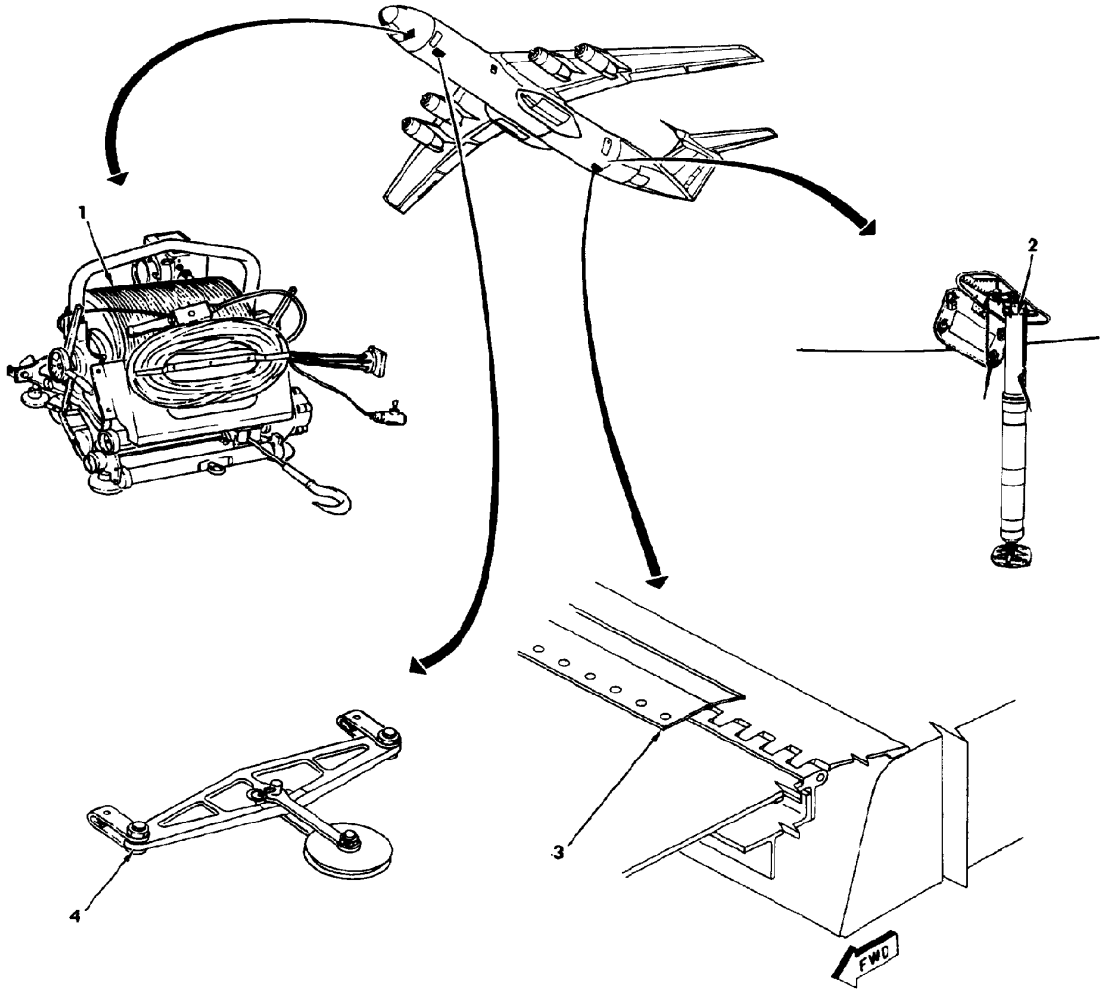

1. CARGO WINCH
2. CARGO STABILIZER STRUT
3. WINCH CABLE WEAR STRIP
4. WIFFLETREE SNATCH BLOCK

Cargo Winch, Cable Wear Strip, and Stabilizer Struts

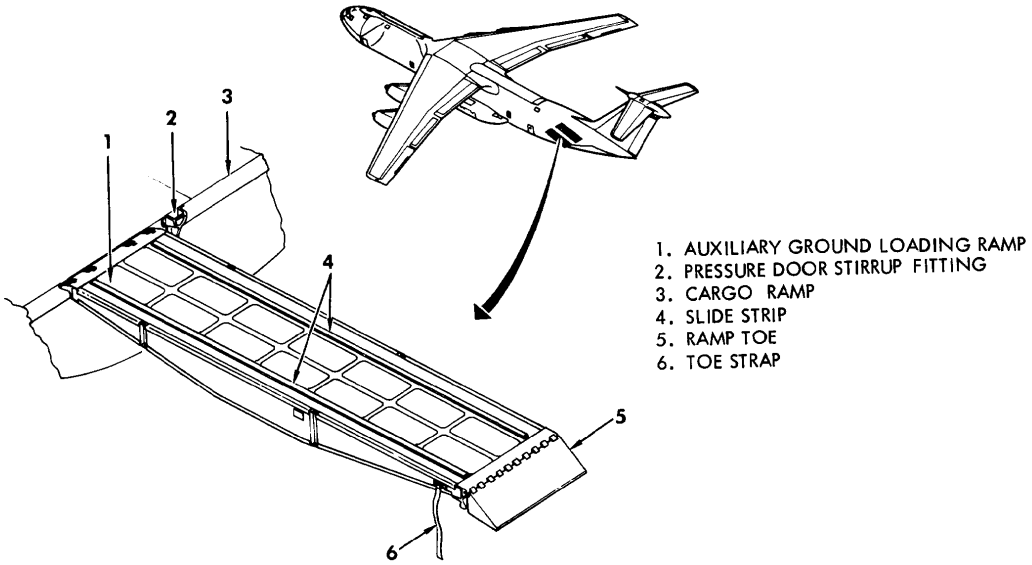

Auxiliary Ground Loading Ramps

Emergency Equipment

Emergency equipment includes liferafts and attached survival kits, escape ladders, escape ropes, crash axes, first-aid kits, fire extinguishers, life vests and an emergency locator transmitter (ELT) installed in the vertical stabilizer. Six 20-man life rafts and attached survival kits are carried on the airplane: four internally in the cargo compartment, and two externally in covered wells in the right and left wing-to-fuselage fairings.

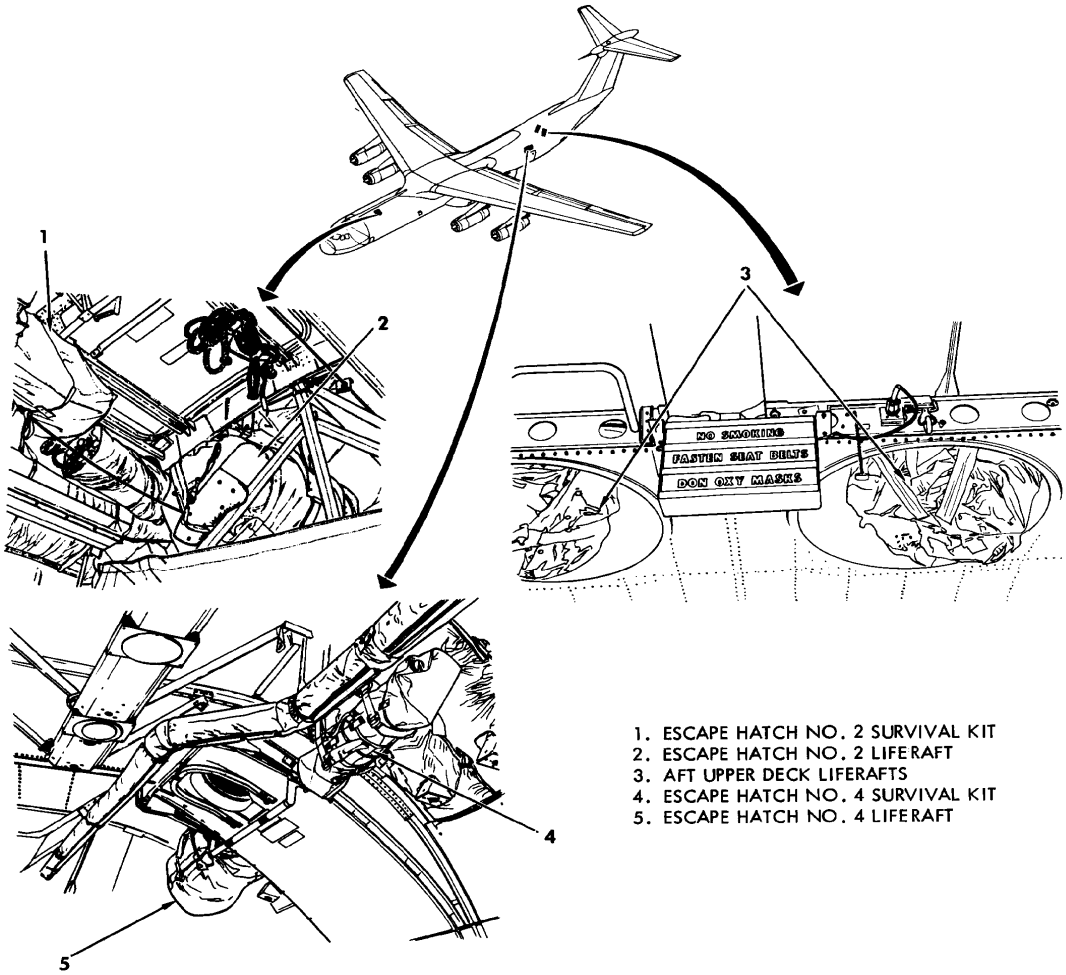

Cargo Compartment Liferafts and Survival Kit Provisions (Sheet 1 of 2)

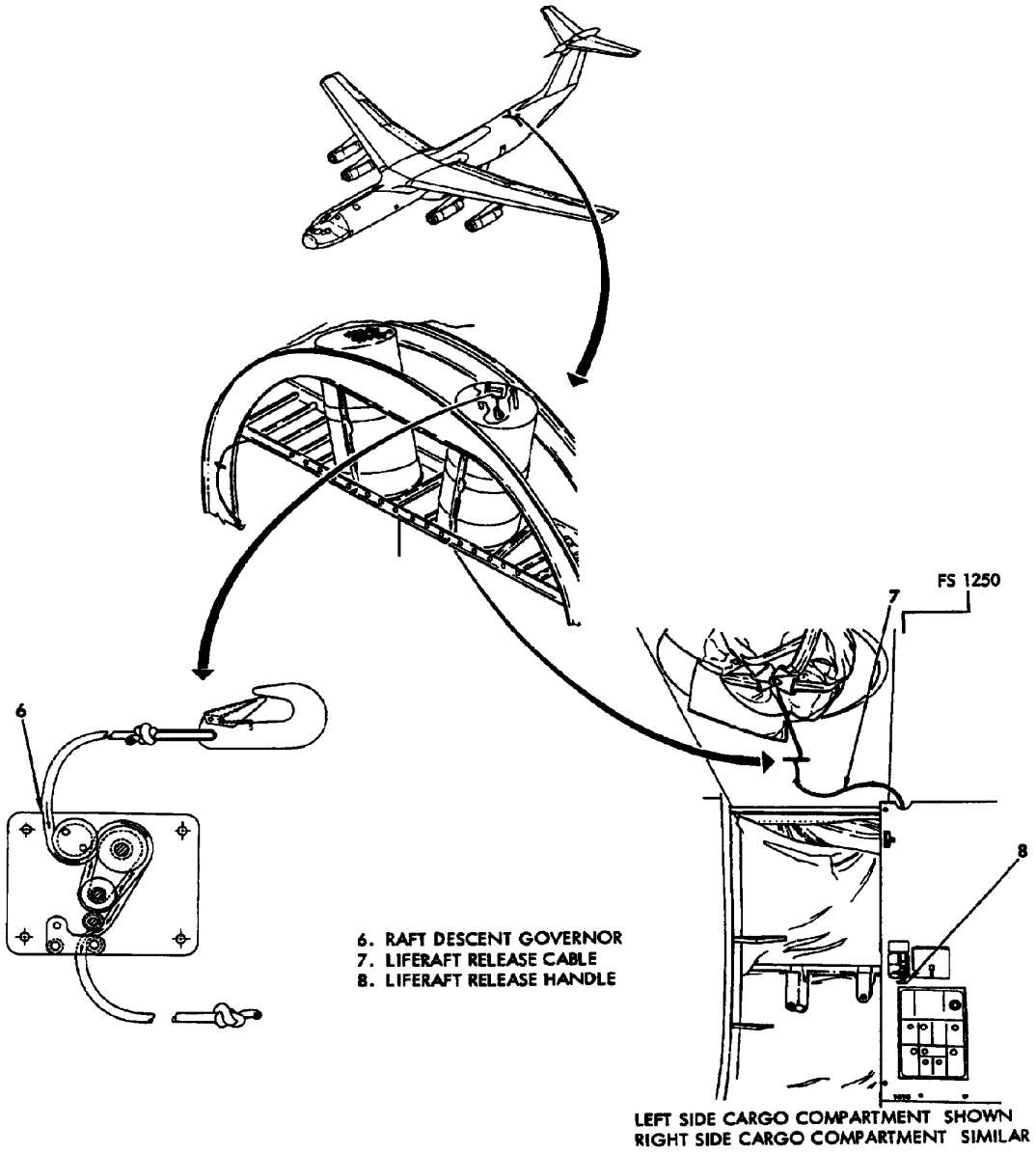

Cargo Compartment Liferafts and Survival Kit Provisions (Sheet 2 of 2)

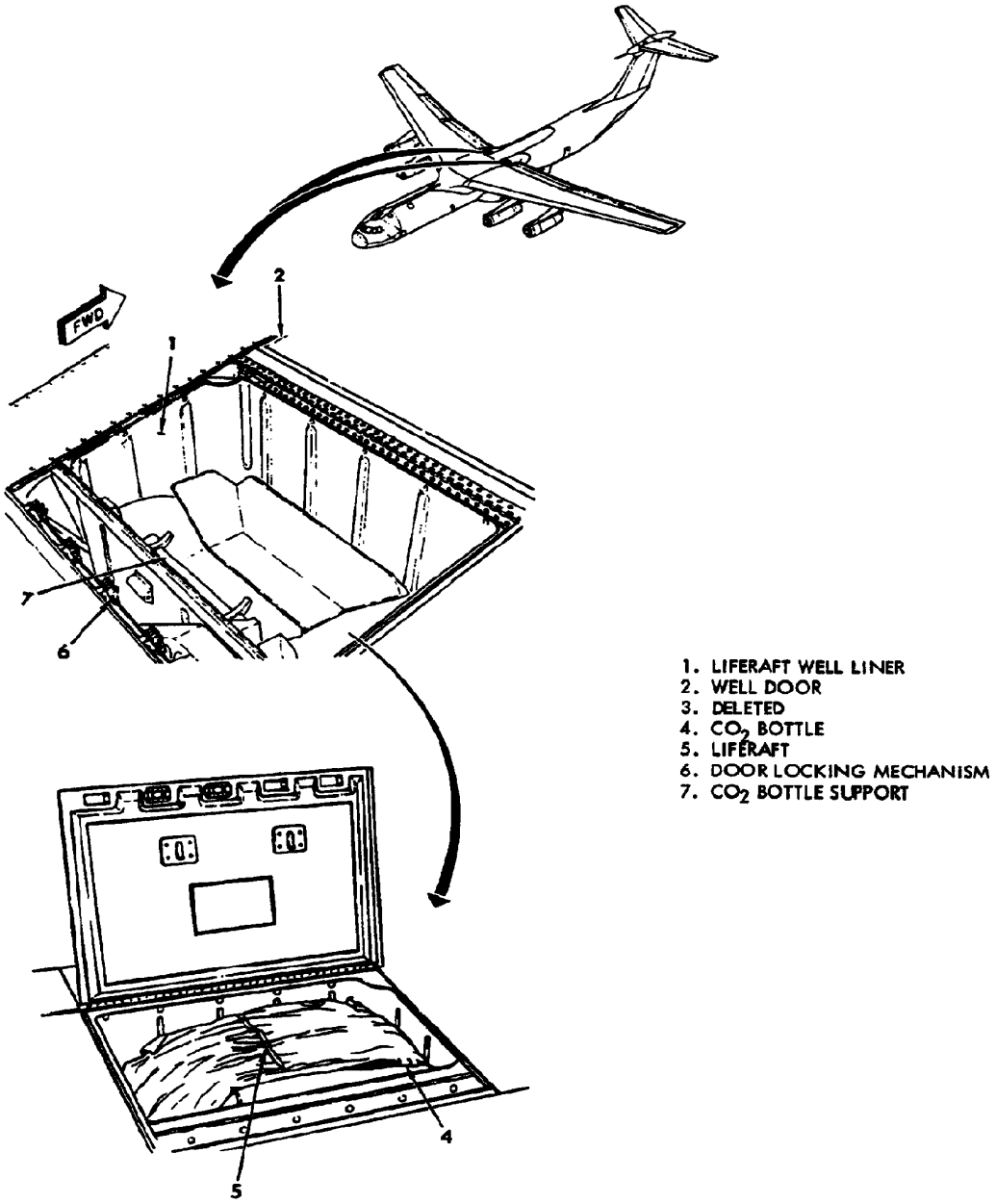

Wing Liferaft and Survival Kit Provisions

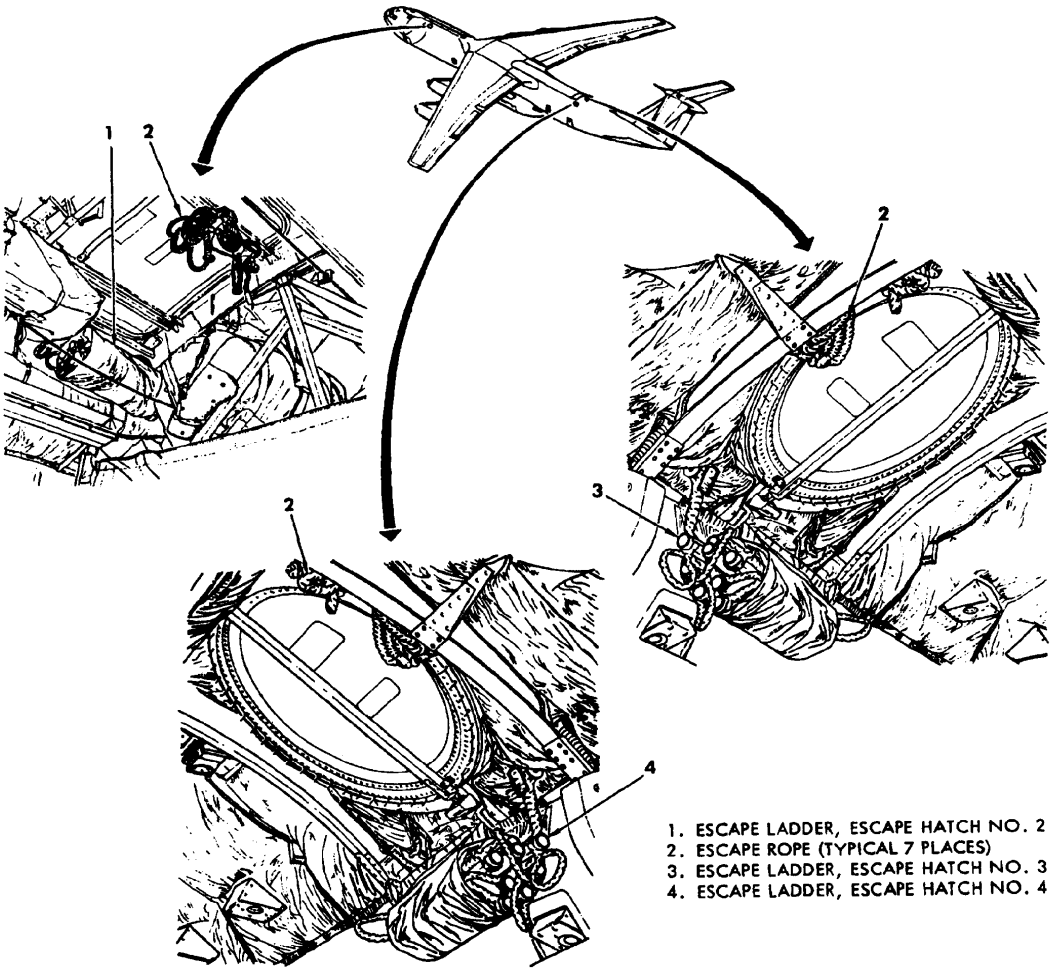

Emergency Escape Ropes and Ladders

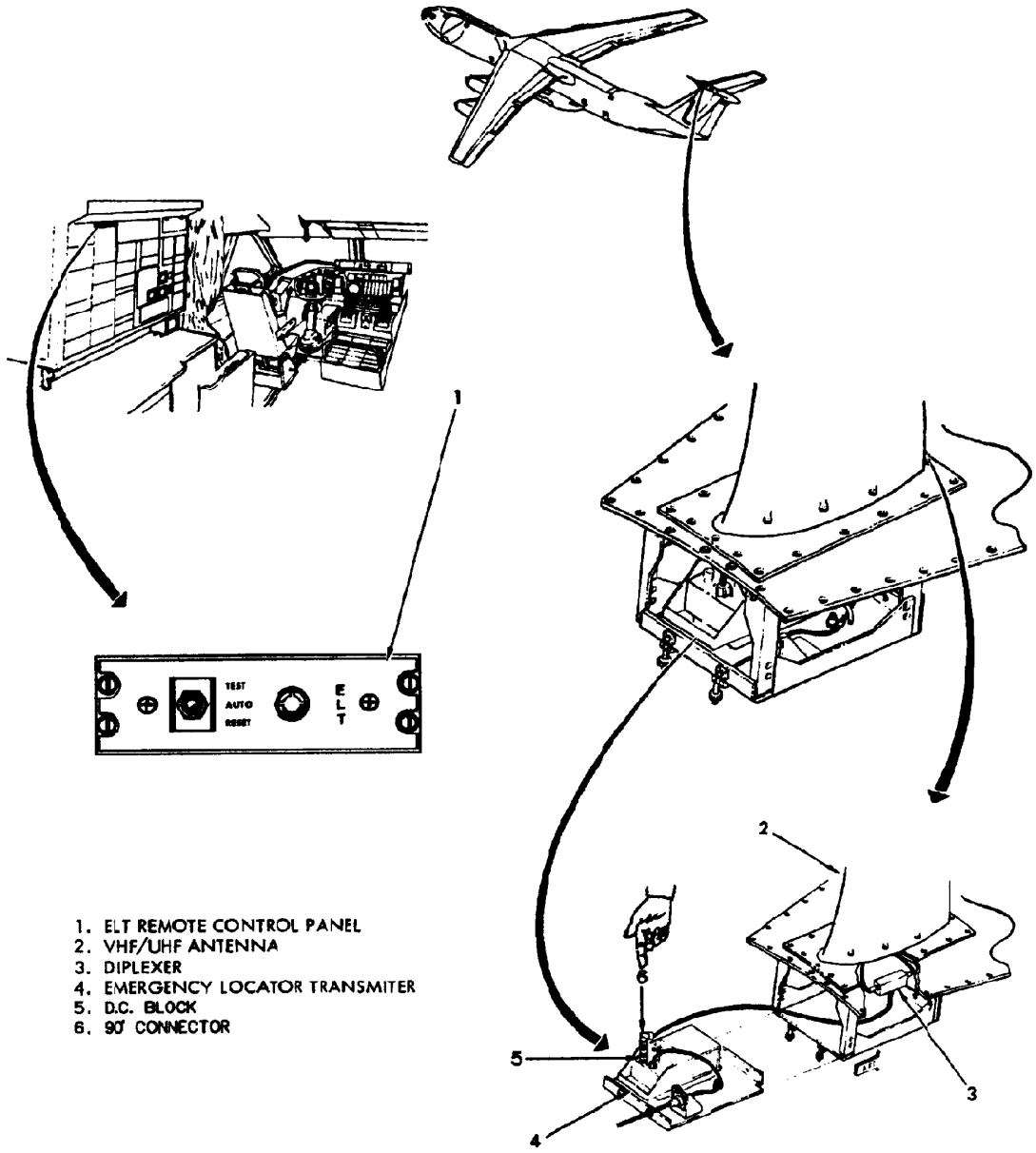

Emergency Locator Transmitter (ELT) System Components

Aerial Delivery System (ADS)

The ADS supports cargo air drop of palletized cargo. In the air drop configuration, restraint rails are installed, roller conveyors are turned up for cargo movement, and anchor cables are installed. An extraction parachute release mechanism releases the parachute electro-mechanically or manually. Electro-mechanical release is accomplished by energizing a release solenoid which drives a release pin against a lever on the parachute holder to release the parachute. Manual release is effected by pulling a D handle located below the crew door interphone and public address (PA) panel. The handle is connected by a cable to a lever which is forced down against the release pin flange. A parachute winch and parachute release pendulum facilitate parachute handling and release, respectively. Bailout alarm and troop jump lights are also installed.

Aerial Delivery System (ADS) Control Panels

Two ADS panels are installed at the pilot's and copilot's stations. The panels contain all switches and indicators necessary to open or close the cargo doors, actuate the extraction parachute release mechanism, and initiate paratroop caution and jump signals. An additional control panel is installed on the navigator's panel. The navigator's control panel contains switches for actuating the extraction parachute device and initiating the paratroop caution and jump signals.

Extraction Parachute Release Mechanism

The release mechanism is mounted in the aft upper deck forward of the aft pressure bulkhead. The mechanism consists primarily of permanently installed support housing and a parachute holding device.

Extraction Parachute Release Mechanism Operation

a. Electrical Operation. When the petal doors open, a ground is present at the ADS arming switch on the crew door interphone and PA panel. Placing the arming switch to ARM completes the circuit and energizes the ADS arming relay. The ADS arming contacts close and 28 VDC is applied to the open CHUTE REL switches and turns on the ADS ARMED indicator lights on the pilot's, copilot's, and navigator's panels. Placing any one of the CHUTE REL switches to REL will energize the ADS chute release relay, and the ADS light control relay. 28 VDC is applied to the air drop release solenoid through the closed contacts of the ADS chute release relay, releasing the parachute. Simultaneously, power is applied to the CHUTE REL indicator light. When the switch is released, the ADS light control relay remains energized by a holding circuit. The CHUTE REL light remains on until the ADS arming switch is placed to DEARM.

b. Manual Operation. Manual parachute release is accomplished by pulling the manual release handle located below the crew door interphone and PA control panel to the RELEASE (full down) position. When the handle is pulled down, the cable connecting the handle and the release mechanism on the housing support pulls the spring-loaded mechanism upward. A pivoted lever attached to the mechanism applies downward pressure on the firing pin. The firing pin actuates the release lever and linkage in the parachute holder and latches open to release the parachute.

Bailout Alarm and Troop Jump Lights

A warning horn is installed overhead at fuselage station 1058E on the right side of the cargo compartment. The warning horn is controlled by the BAIL OUT ALARM switch on the pilot's overhead panel for manual notification of emergency conditions. The horn is automatically actuated by a flow of oxygen in the troop oxygen system. The warning horn is also connected to the auxiliary power unit (APU) fire warning circuit to warn of APU fire on the ground. The troop jump light panels are installed forward and aft of each troop door, one panel aft of the crew door and two panels above the cargo ramp. Each panel houses a red and green light. Two JUMP SIGNAL switches are located on the pilot's and copilot's ADS control panel and on the navigator's control panel. The left switch controls the CAUTION lights and must be placed to ON first. A mechanical interlock must be moved to the left before the JUMP switch on the right can be set to ON. BRIGHT and DIM push-button switches are located on each of the jumpmaster/loadmaster control panels. The switches on either panel control the brilliance of all CAUTION and JUMP lights. All lights are dimmed automatically when the cargo red lights are in use or the white lights are on. The BRIGHT push-button must be depressed to return the signal lights to bright after automatic dimming.

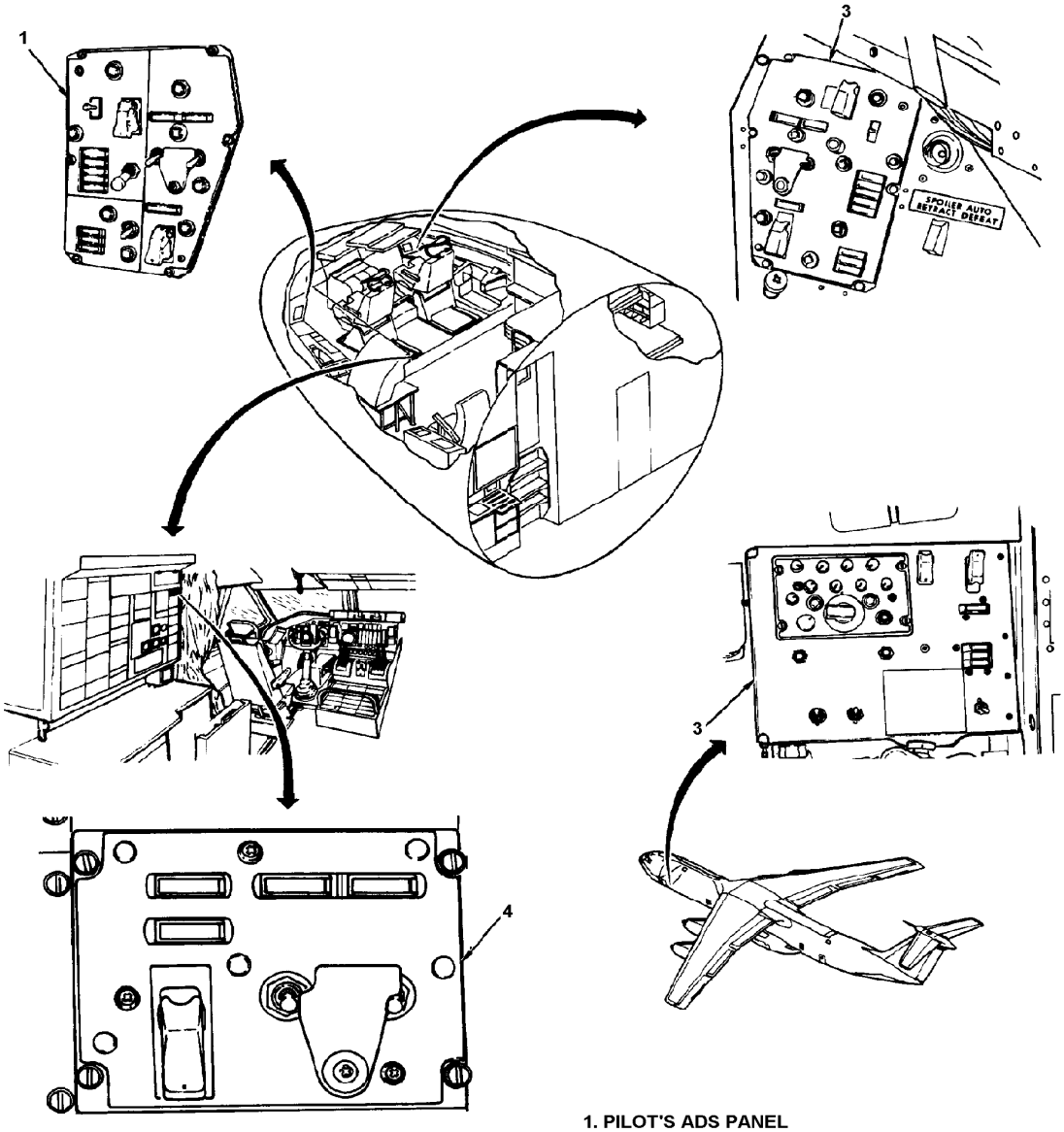

1. PILOT'S ADS PANEL
2. COPILOT'S ADS PANEL
3. PA CONTROL/CARGO DOORS PANEL
4. NAVIGATOR ADS AND PARADROP PANEL

Aerial Delivery System (ADS) Control Panels

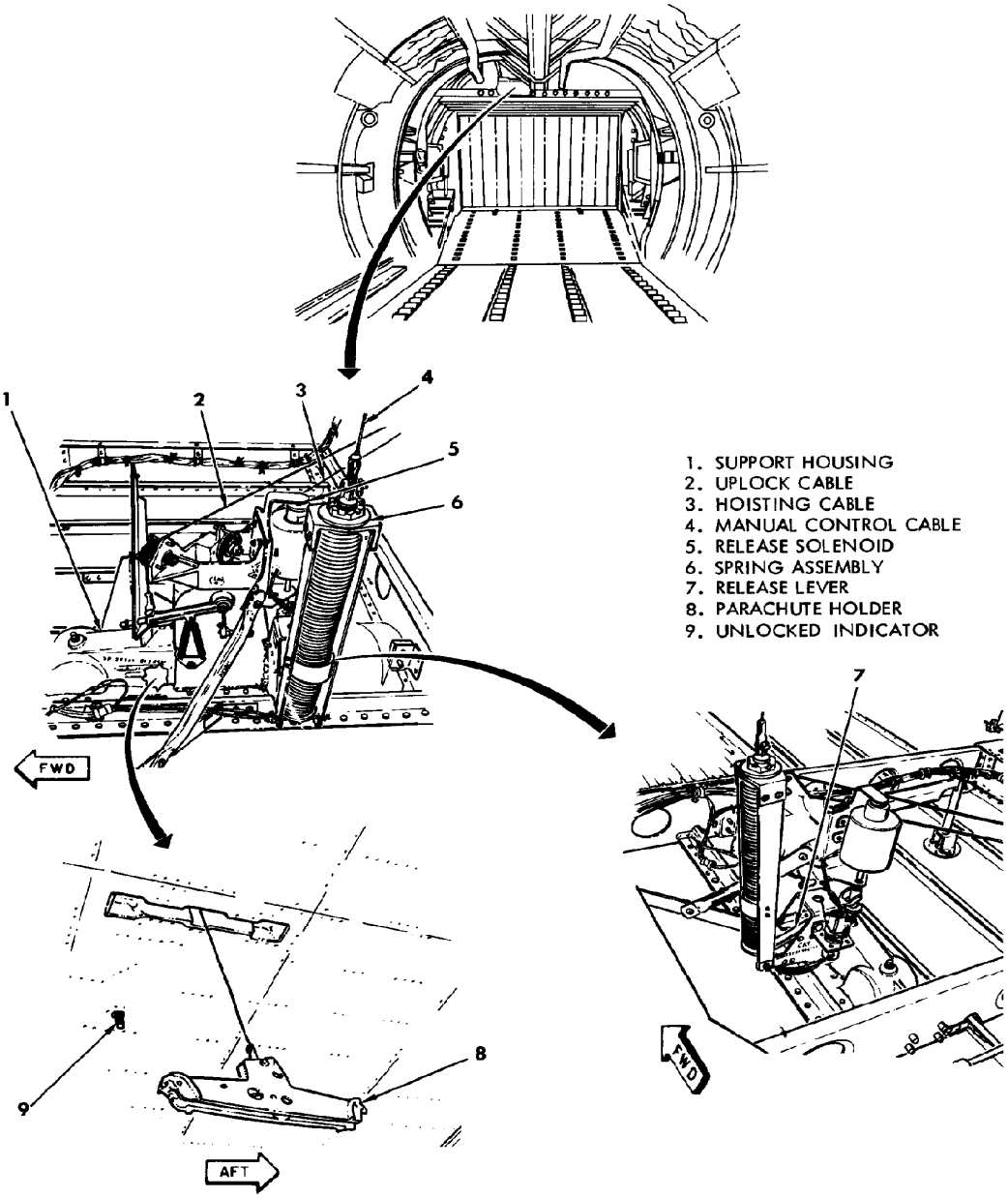

Extraction Parachute Release Mechanism (Sheet 1 of 2)

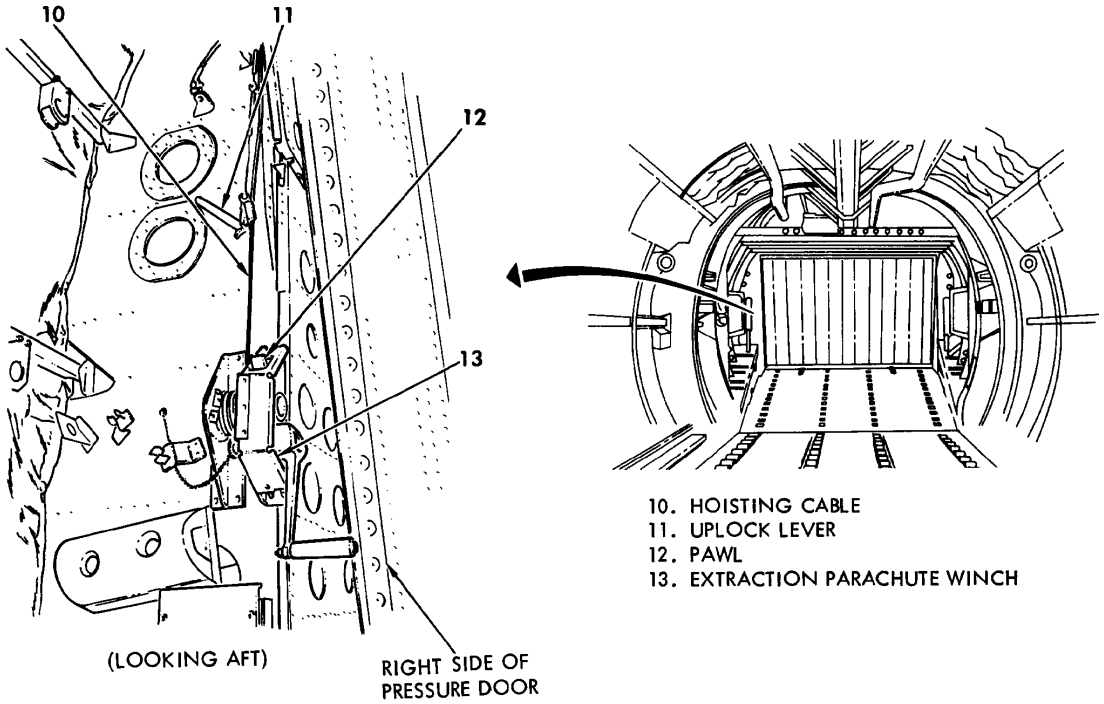

Extraction Parachute Release Mechanism (Sheet 2 of 2)

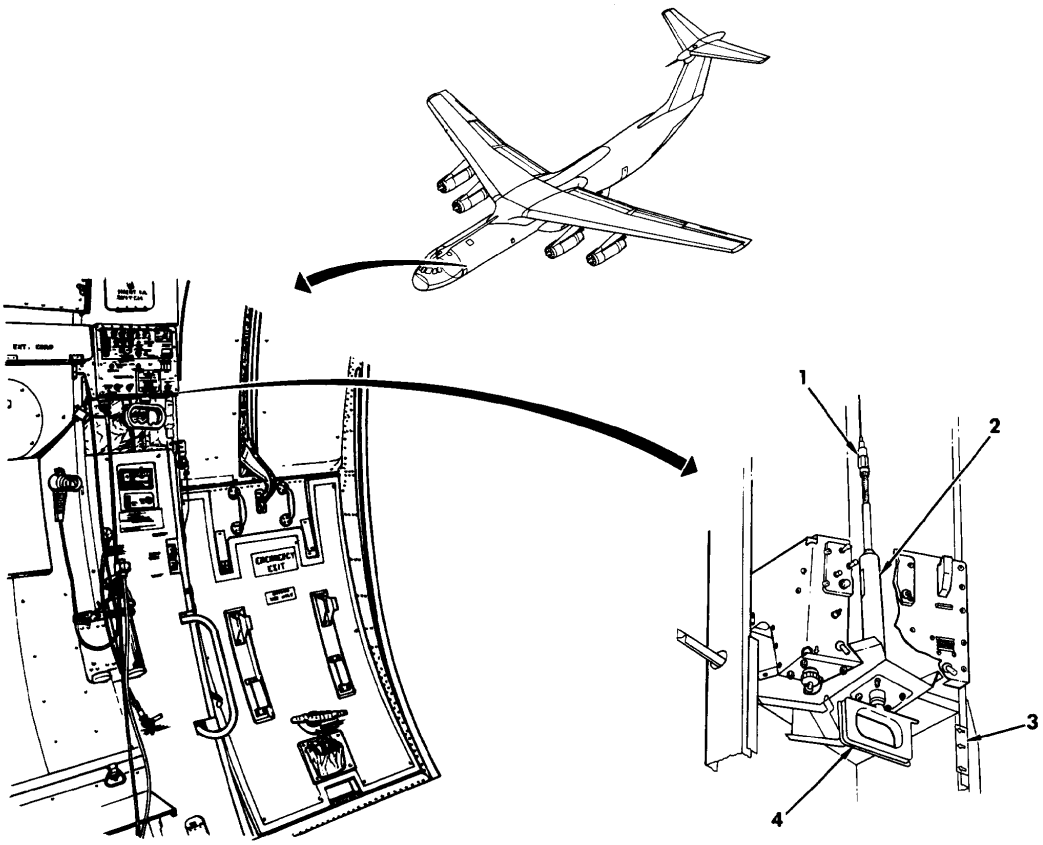

1. MANUAL RELEASE CABLE
2. MANUAL CONTROL AND TENSION REGULATOR
3. HANDLE POSITION INDICATOR
4. MANUAL CONTROL HANDLE

Extraction Parachute Manual Release Control

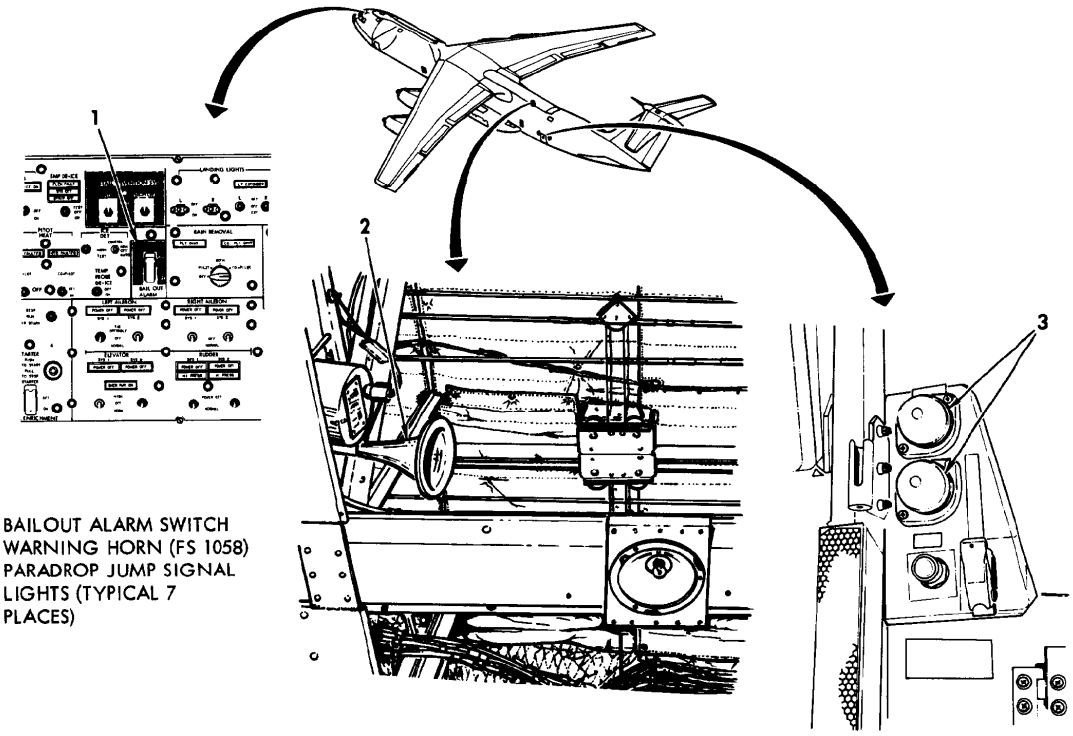

Bailout Alarm and Jump Lights System Components

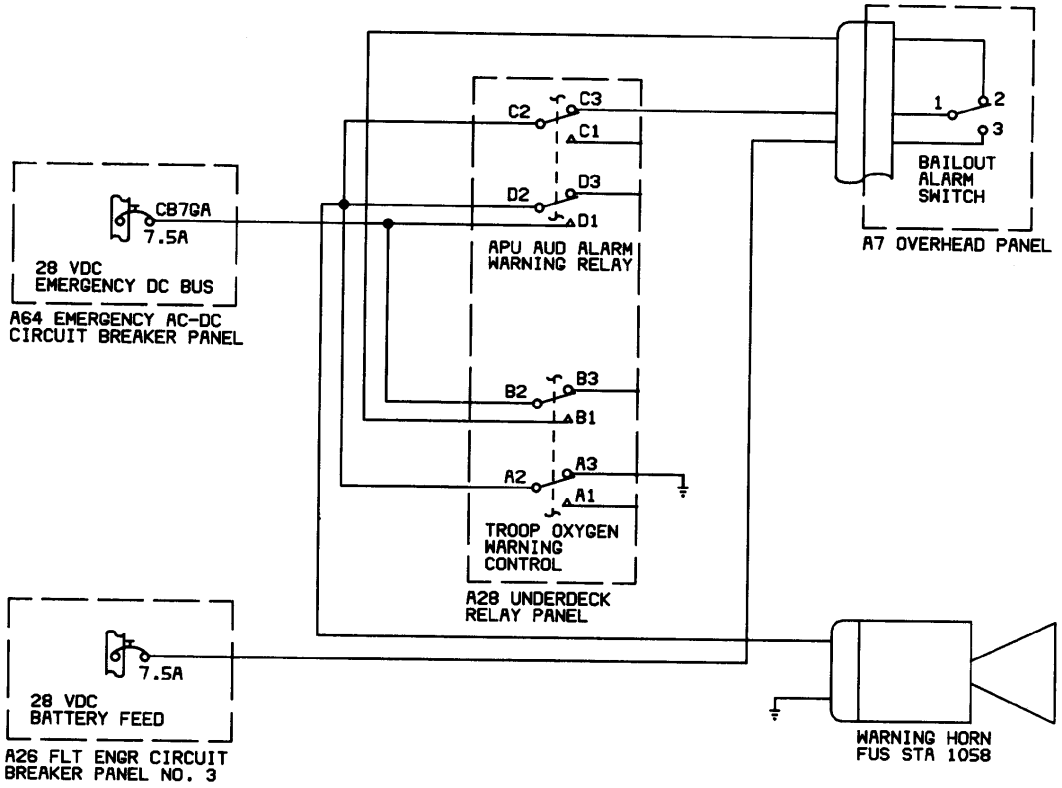

Manual Bailout Alarm Electrical Schematic Diagram

Special Missions Equipment

The airplane can be configured for special missions by installing special kits. These kits include the following: oxygen supply and distribution kit, liferaft liner kit, stanchion kit, litter installation kit, troop transport kit, and paratroop kit. Paratroop spoiler doors, jump platforms, and anchor cables are also included. Both integral and removable cable supports as well as handling winches are provided. A maximum of 200 ground troops or 155 paratroops can be carried. The airplane can also be equipped for the transport of personnel and cargo.

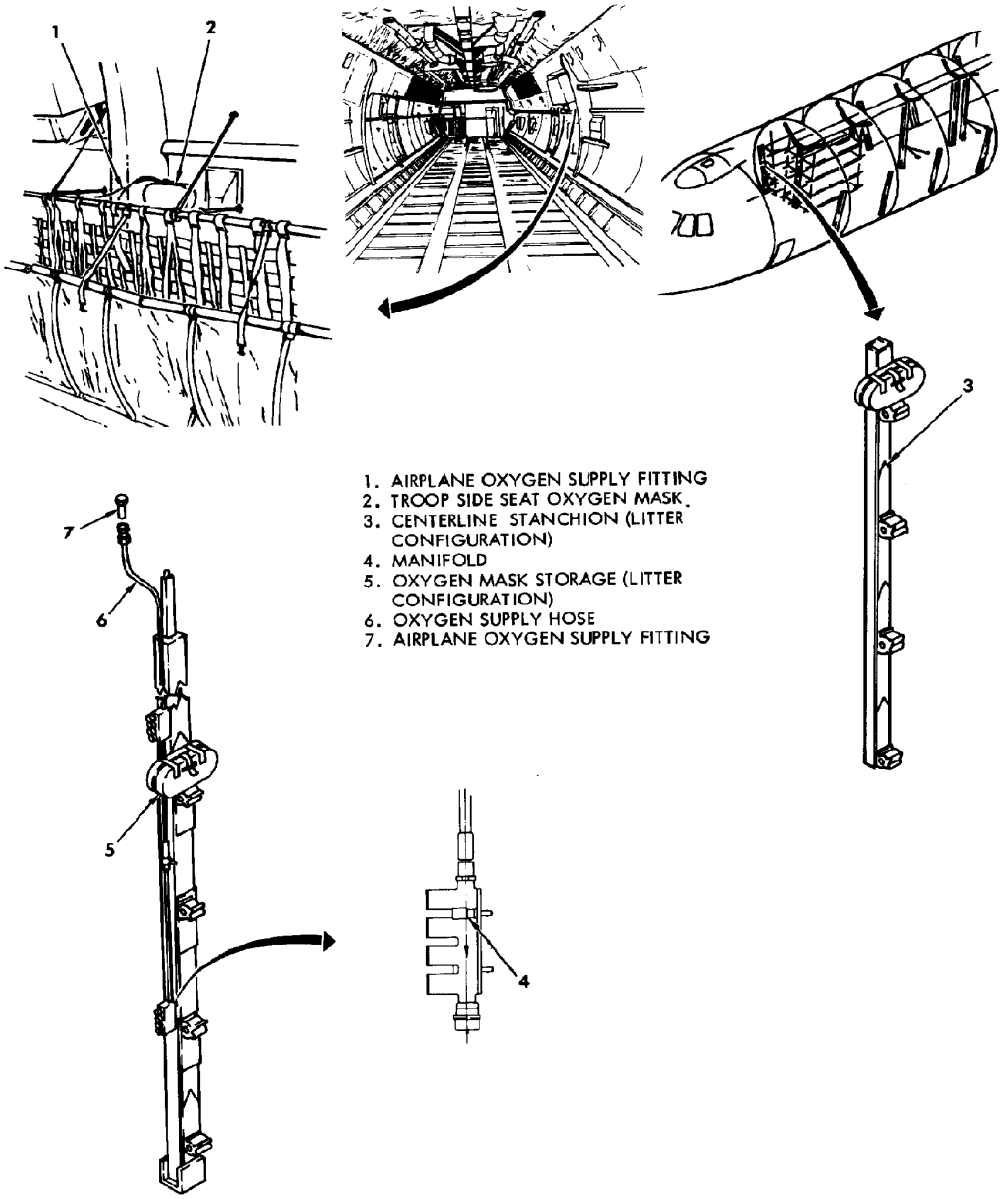

Oxygen Distribution and Supply Kit

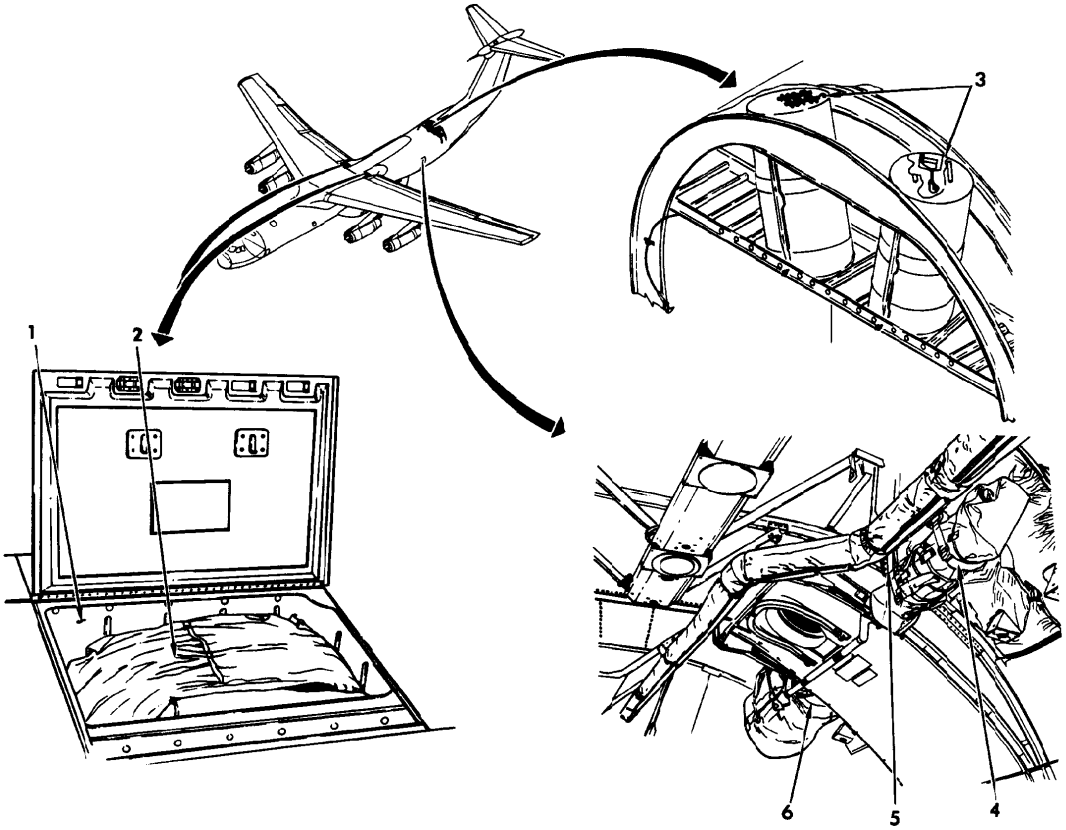

1. WING LIFERAFT WELL LINER
2. WING LIFERAFT (TYPICAL)
3. LIFERAFT STOWAGE CONTAINER
4. SURVIVAL KIT HARNESS (TYPICAL)
5. SURVIVAL KIT CRADLE (TYPICAL)
6. LIFERAFT HARNESS (TYPICAL)

Liferaft Liner Kit

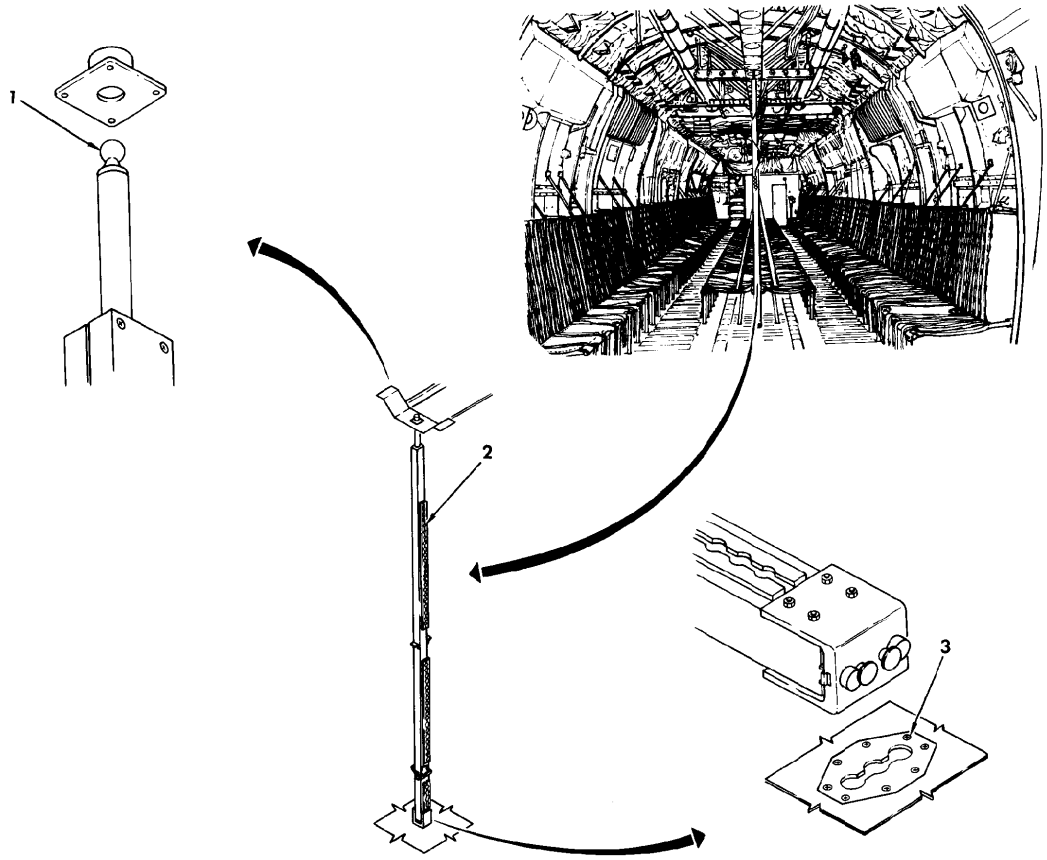

1. UPPER BALL FITTING
2. STANCHION (TYPICAL)
3. 10,000 POUND FLOOR RECEPTACLE

Stanchion Kit

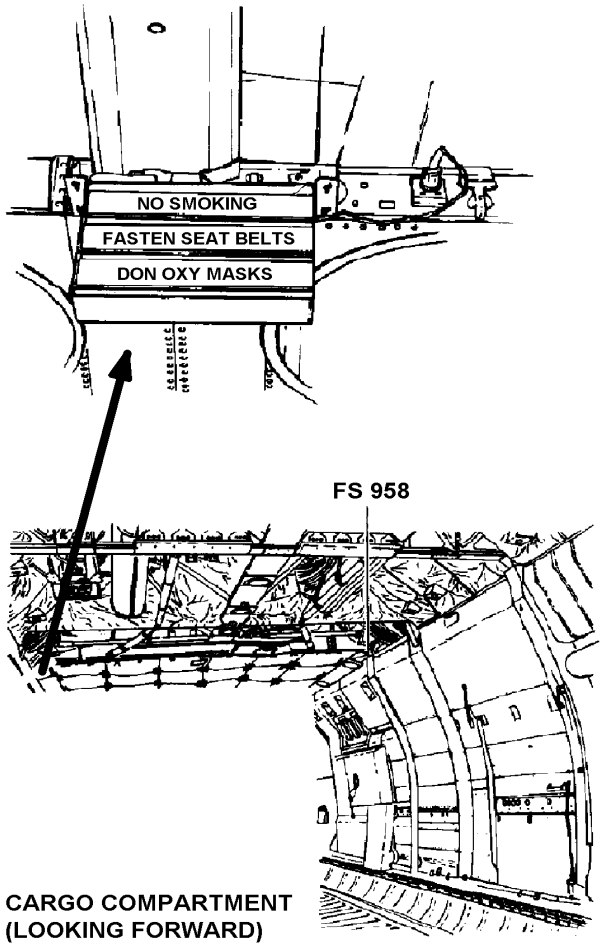

Personnel Warning Signs

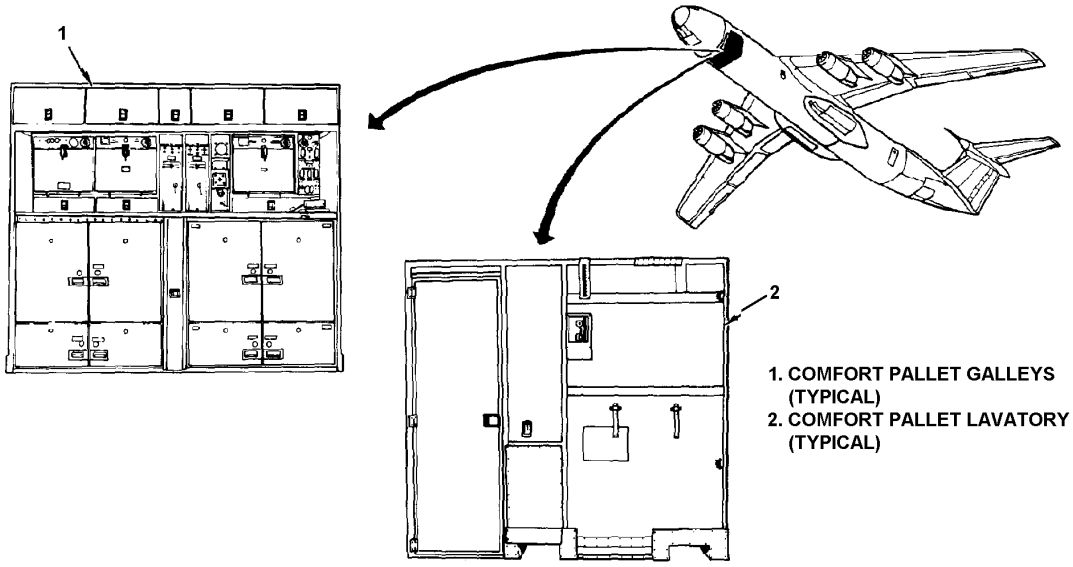

Comfort Pallet

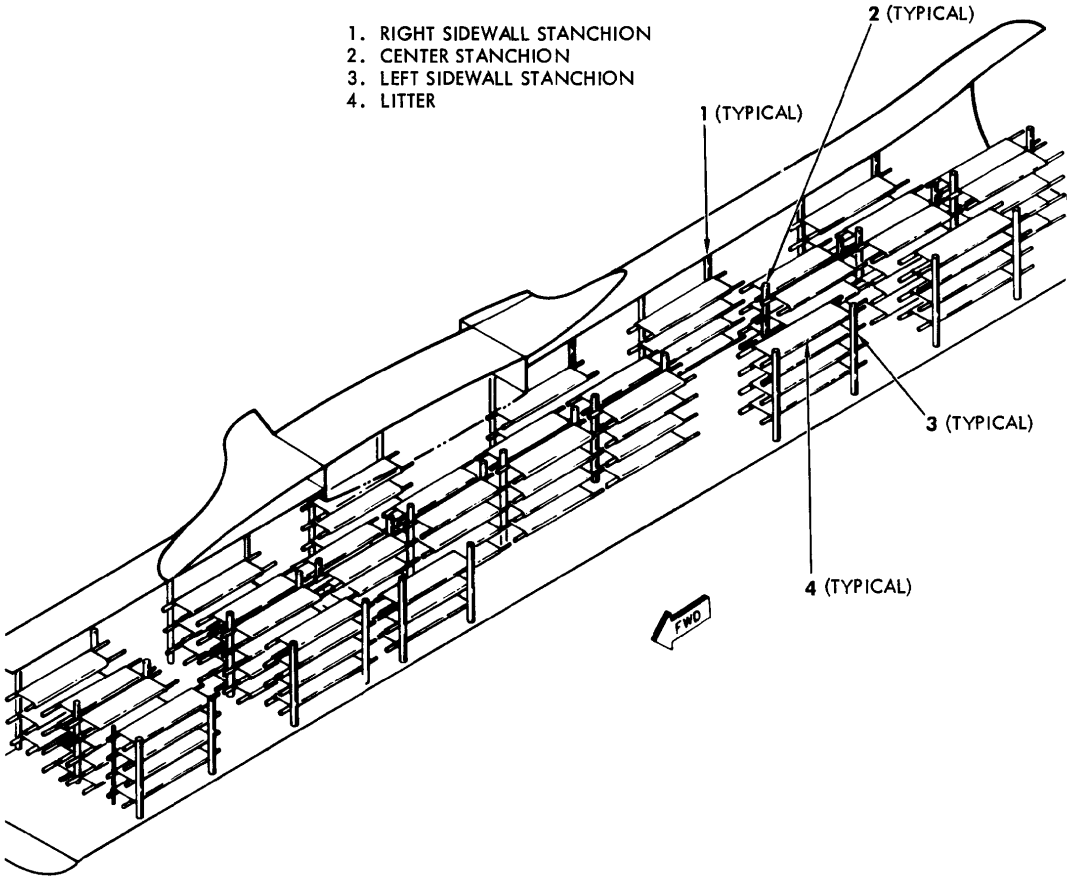

Litter Configuration

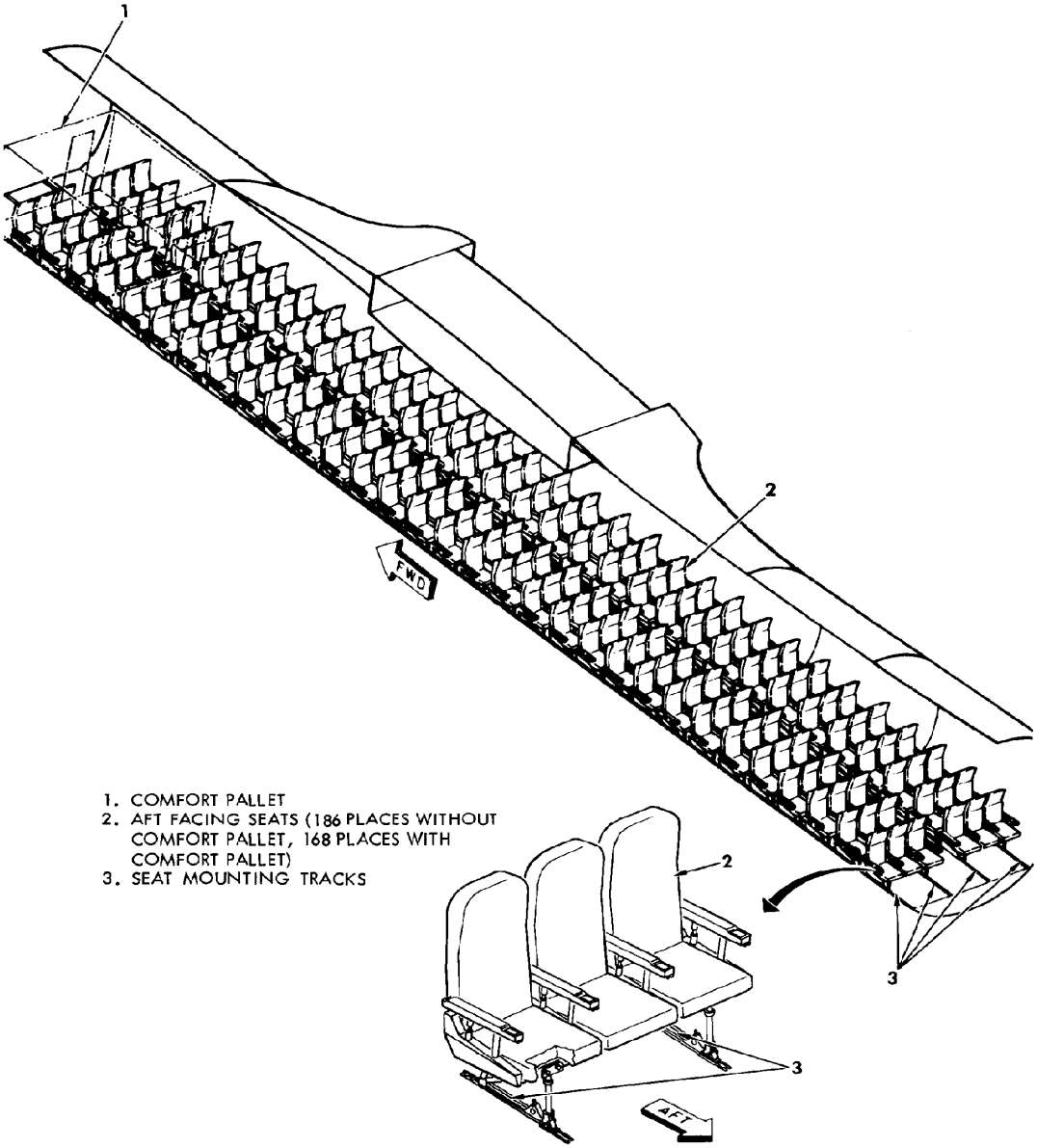

1. COMFORT PALLET
2. AFT FACING SEATS (186 PLACES WITHOUT COMFORT PALLET, 168 PLACES WITH COMFORT PALLET)
3. SEAT MOUNTING TRACKS

(TYPICAL SEAT MODULE)

Rigid Seats

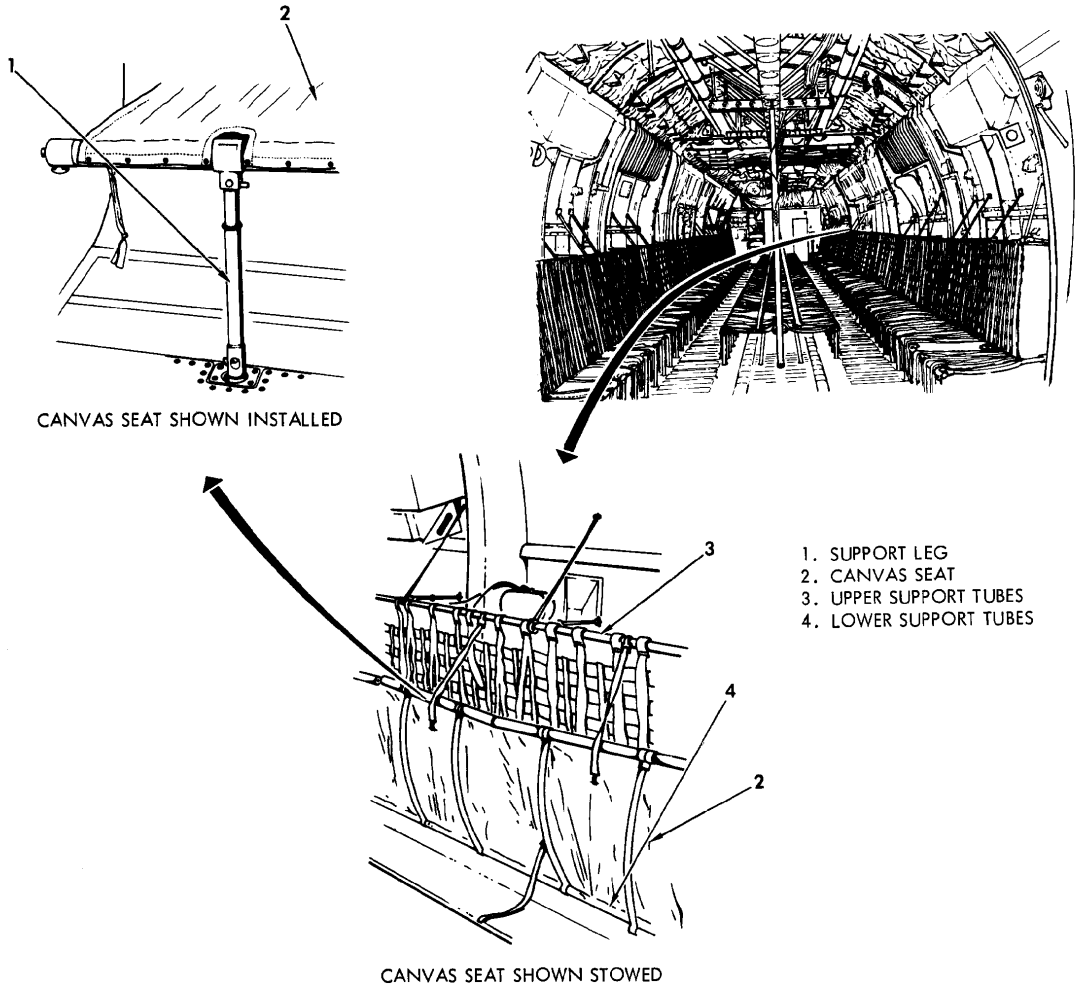

Canvas Troop Seats

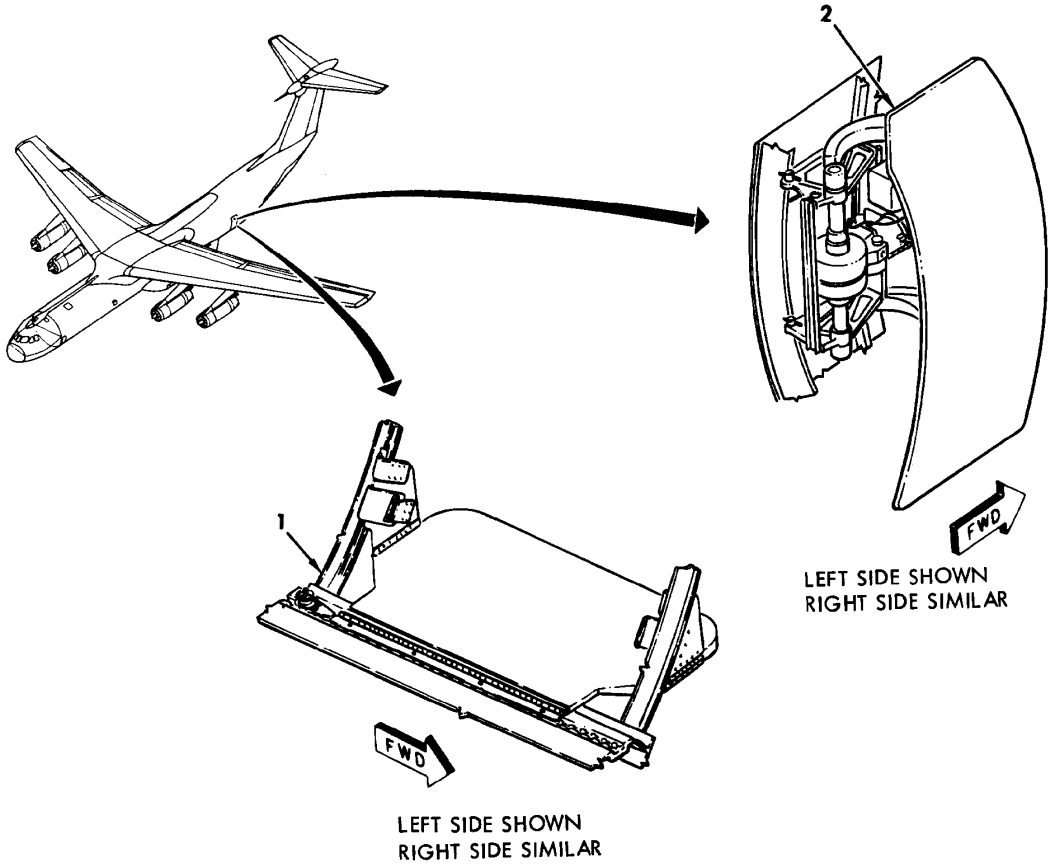

1. PARATROOP JUMP PLATFORM
2. PARATROOP SPOILER DOOR

Paratroop Spoiler Doors and Jump Platforms

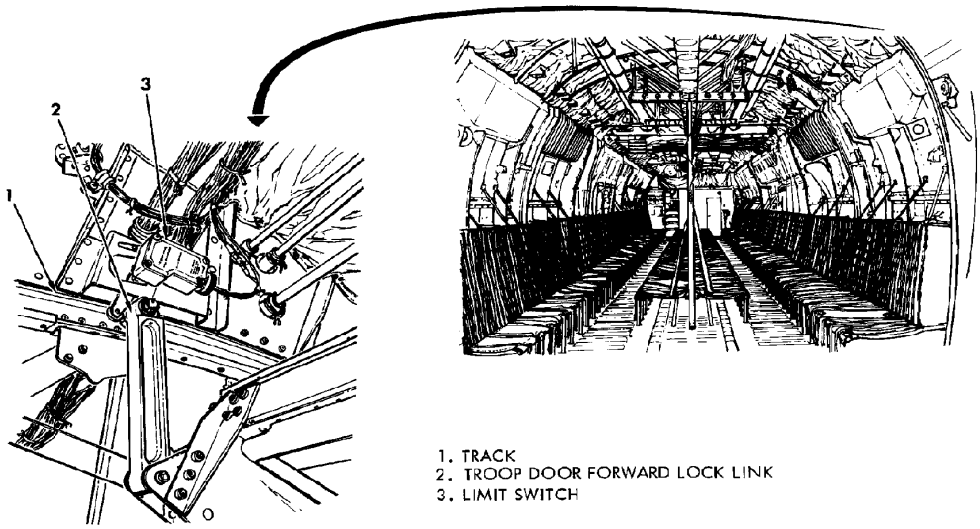

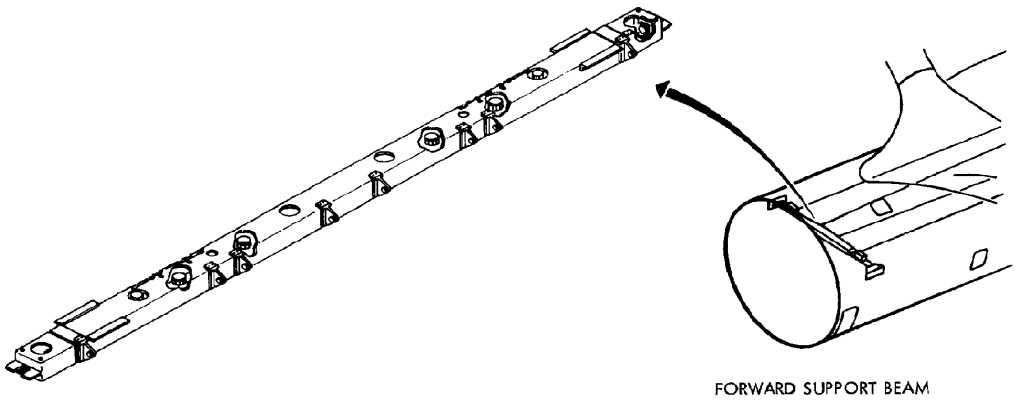

Troop Door Limit Switches and Anchor Cable Forward Support Beam

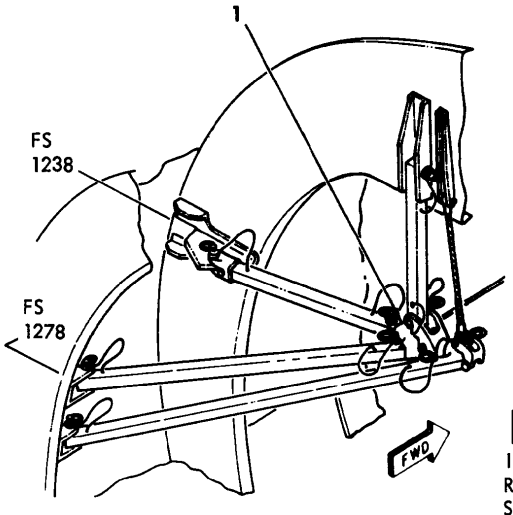

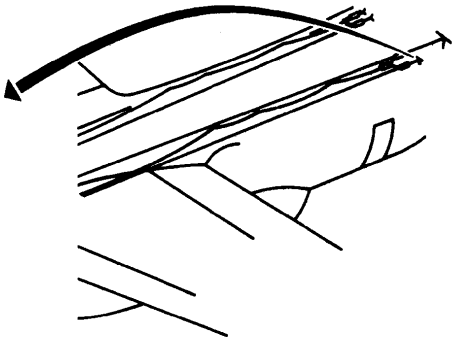

1. INTERMEDIATE SUPPORT.

NOTE

INTERMEDIATE SUPPORT IS SHOWN RIGGED FOR BOTH LONG AND SHORT CABLES. FOR INSTALLATION OF SHORT CABLES OR WHEN ONLY LONG CABLE IS BEING INSTALLED, SUPPORT CABLE AND LOWER AFT SUPPORT ARM ARE NOT REQUIRED.

Anchor Cable Intermediate Supports

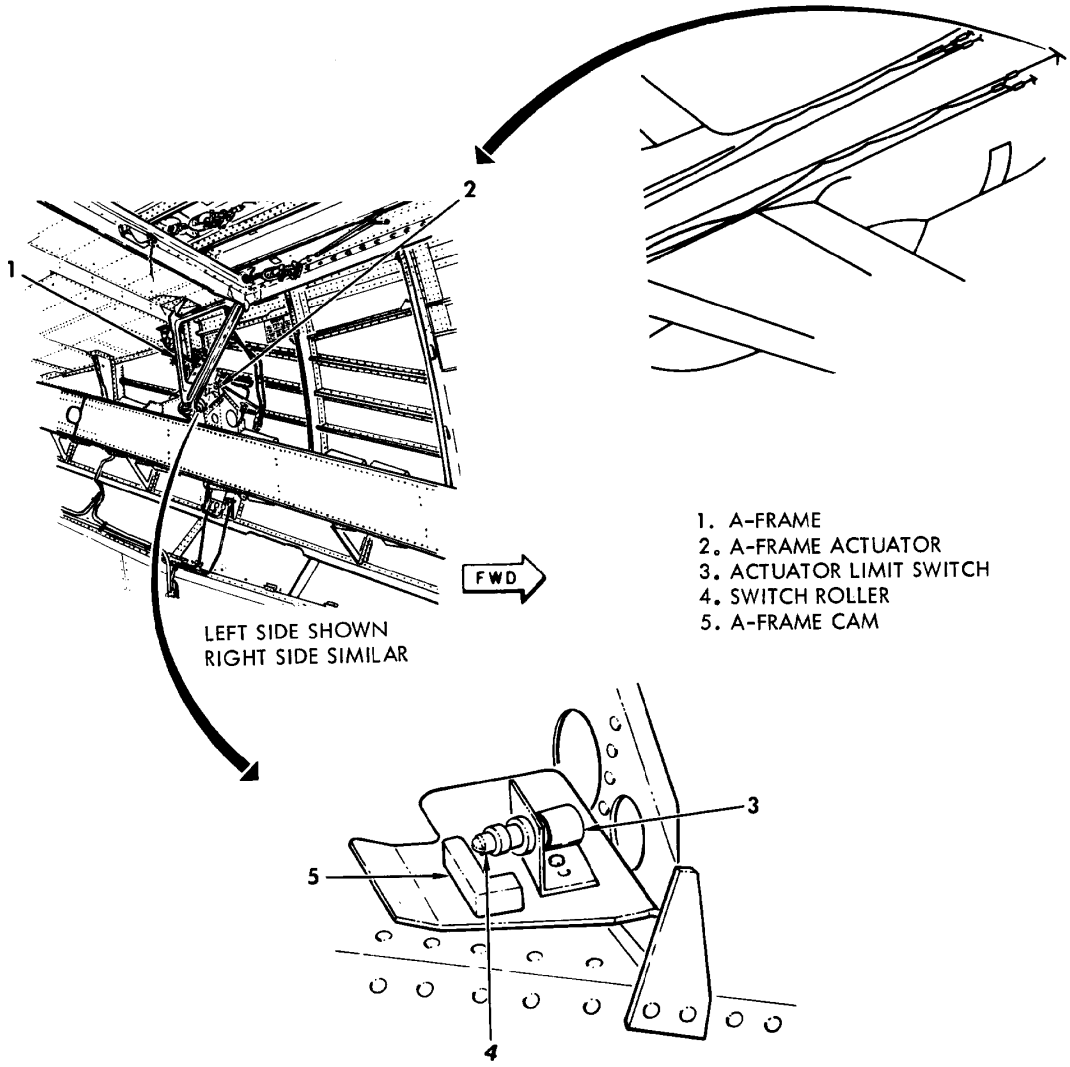

Anchor Cable Aft A-Frame Supports

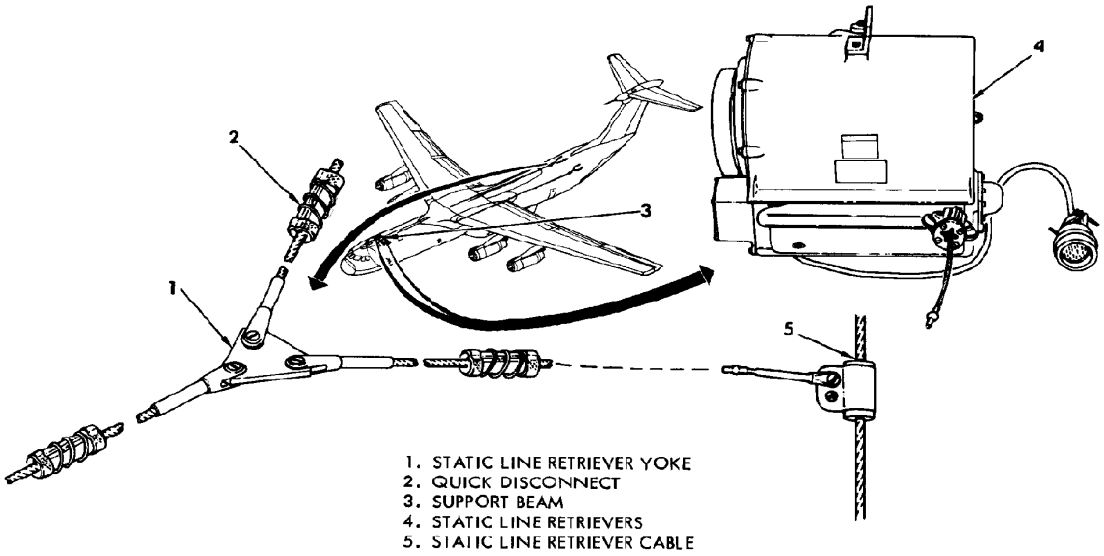

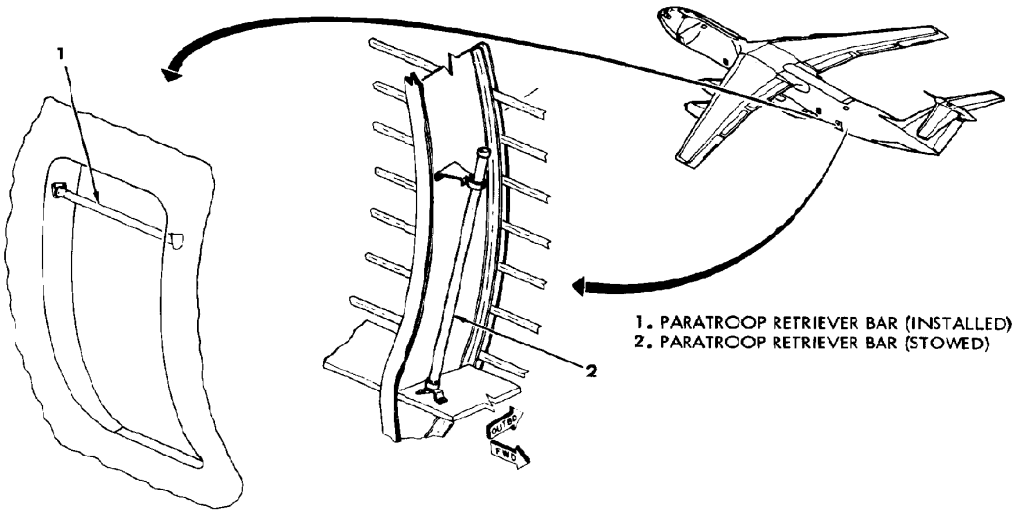

Paratroop Static Line Retrievers and Components and Retriever Bar

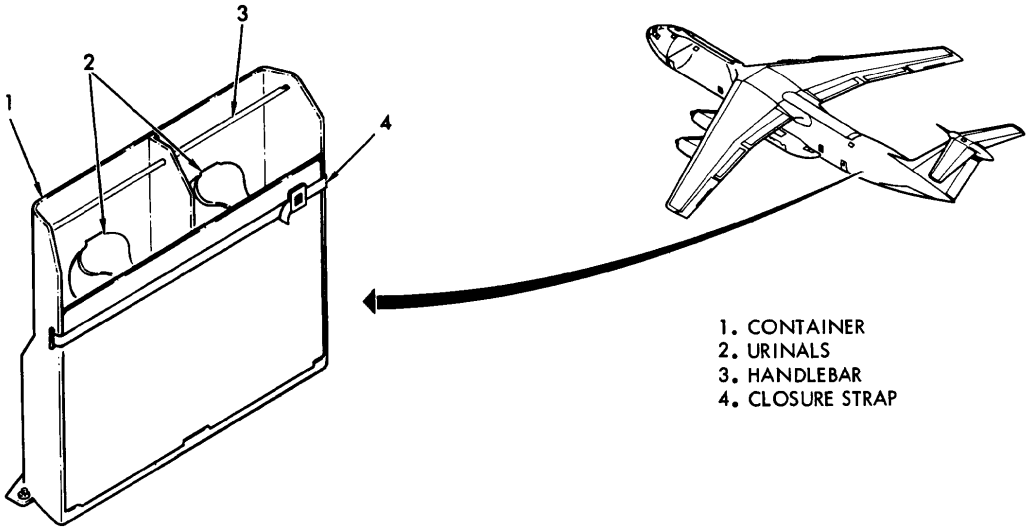

Portable Urinals

NOTES

FIRE PROTECTION SYSTEM

General Description

The fire protection system consists of detection and warning systems, fire isolation systems, and fire extinguishing systems. Fire warning is provided for each of the four engine nacelles and the auxiliary power unit (APU) compartment. Overheat warning is provided for each of the four pylons and the bleed air system. Smoke detectors are installed in the cargo compartment. Fire extinguishing systems are provided for the engine nacelles and the APU compartment. The engine fire isolation system is described in T.O. 1C-141B-2-71GS-00-1.

Detection and Warning Systems

The fire detection system senses the presence of a fire in each engine nacelle and the APU compartment. The overheat system senses the presence of an overheat condition in each pylon. A fire condition is indicated by a steady light in the fire emergency control handle. Pylon overheat is indicated by alternate flashing of the master FIRE warning lights and the control handle light for that engine. The master FIRE warning lights are located on the pilot's and copilot's instrument panels. Each light is common to all four engine and pylon detection systems. A fire emergency control handle for each engine is on the fire emergency shutdown panel. It is located above the main instrument panel. Control handles for the APU are located at the flight engineer's station and in the cargo compartment just aft of the crew door. An APU FIRE light is on the annunciator panel. Test switches for ENGINE FIRE TEST and PYLON OVERHEAT TEST are located on the pilot's pedestal. The APU FIRE WARN TEST switch is on the flight engineer's instrument panel.

The audible fire warning signal system provides a fire warning signal through the interphone system. The signal is also produced by the loudspeaker in the flight station. This system is common to all four engines and the APU detector systems. The APU audible alarm system includes the cargo compartment warning horn. It sounds if an APU fire occurs on the ground. The audible warning system consists of a fire warning generator, audible signal silencing relay, audible fire warning silencing switch, and an amplifier for each crew station, except the navigator's. These amplifiers are also used in the maximum speed warning system. All of the audible signals are switched off by using the AUDIBLE FIRE ALARM SILENCE switch. It is located on the engine fire emergency control panel.

A smoke detection system provides CARGO SMOKE warning lights on the flight engineer's panel and the annunciator panel. One detector is mounted under the flight deck. Five detectors are mounted in varying parts of the cargo compartment. A test switch is located on the flight engineer's panel. Independent left, right and cargo floor bleed air overheat detection systems are provided. They consist of a continuous loop type sensor, a control box, warning light, and a reset and test switch. When an overheat condition is detected, the system automatically closes valves to isolate the affected system. The warning light also turns on.

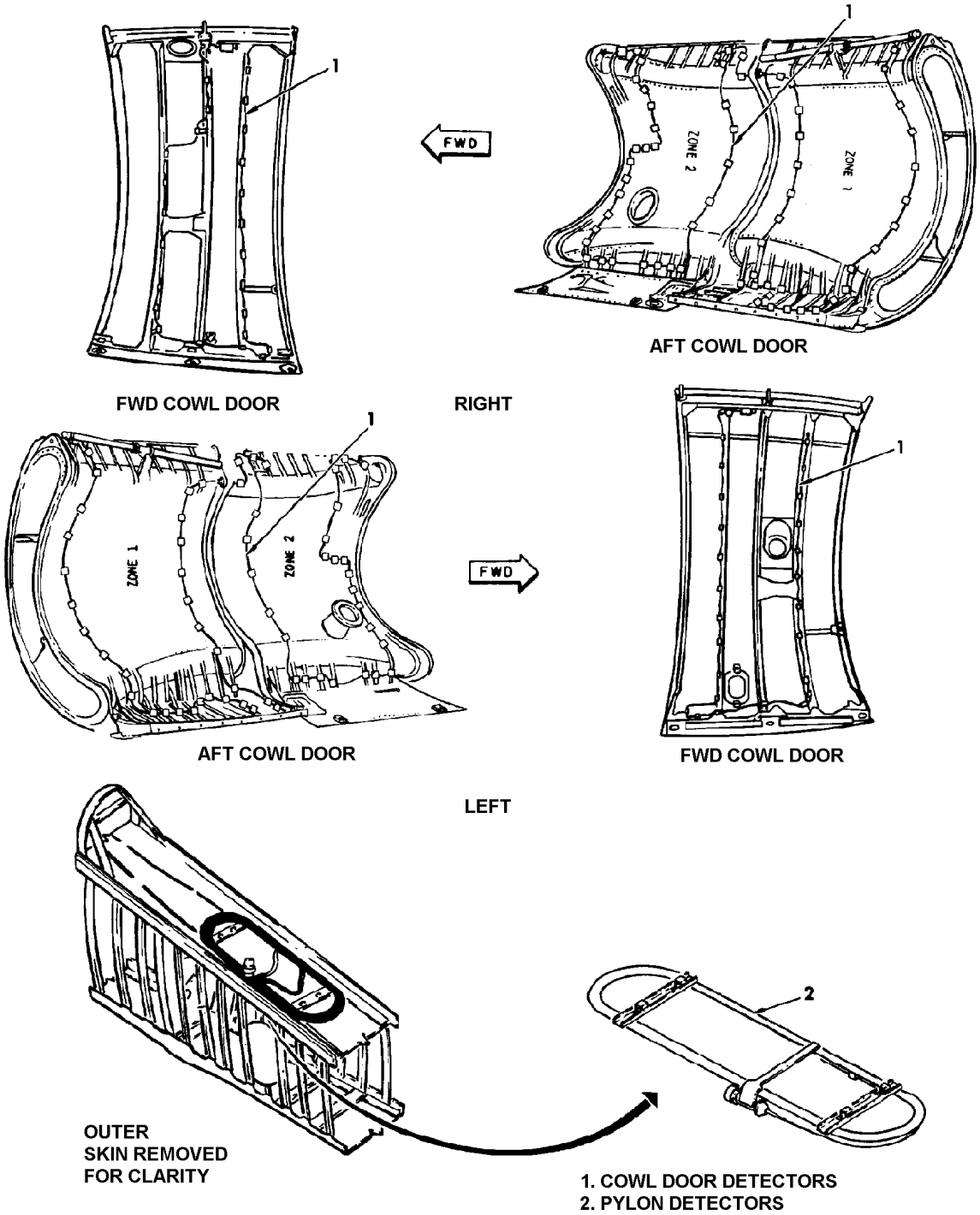

Pylon Overheat and Engine Fire Warning Detector Element Locations

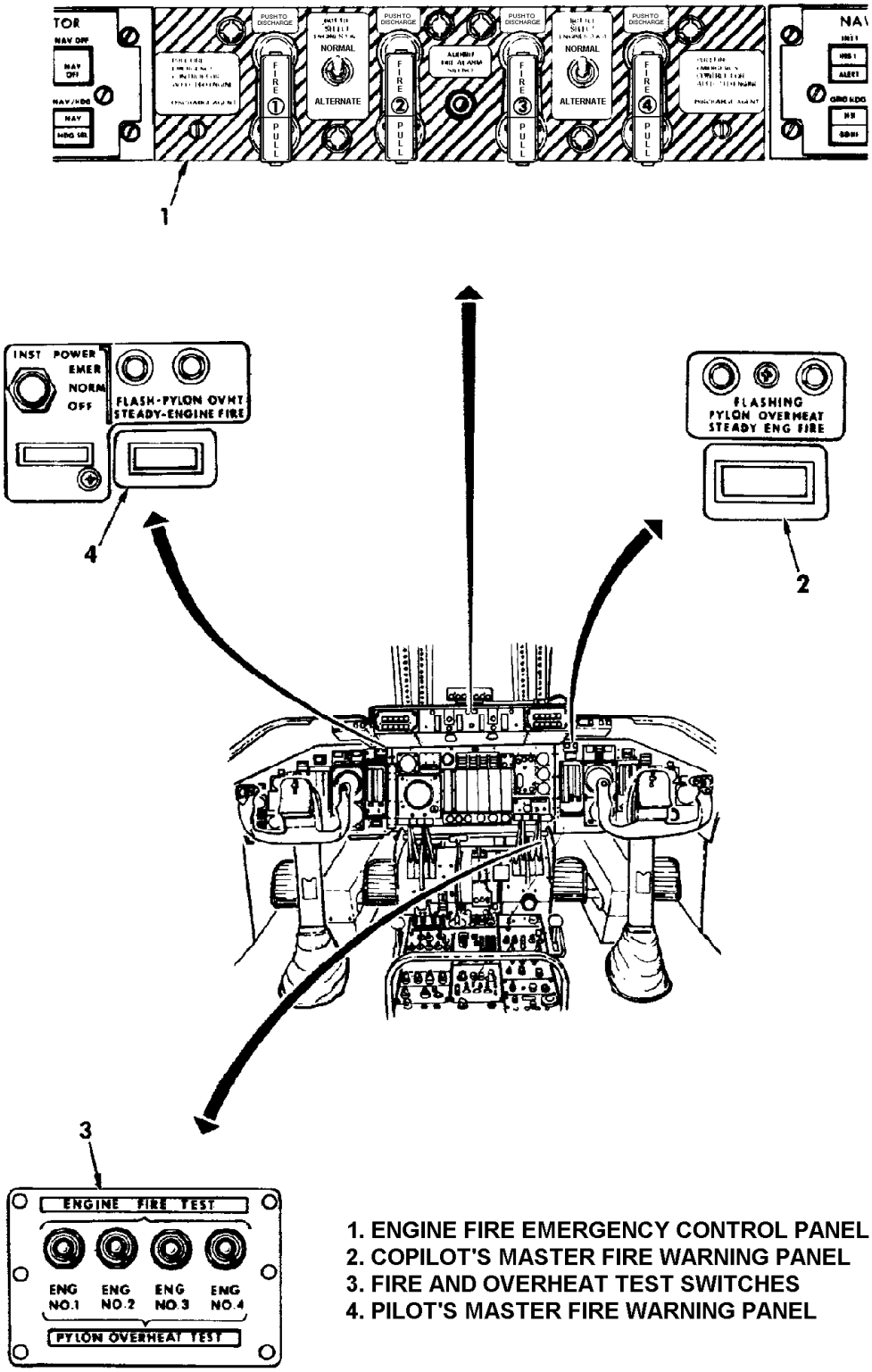

1. ENGINE FIRE EMERGENCY CONTROL PANEL
2. COPILOT'S MASTER FIRE WARNING PANEL
3. FIRE AND OVERHEAT TEST SWITCHES
4. PILOT'S MASTER FIRE WARNING PANEL

Pylon Overheat and Engine Fire Warning System Component Locations

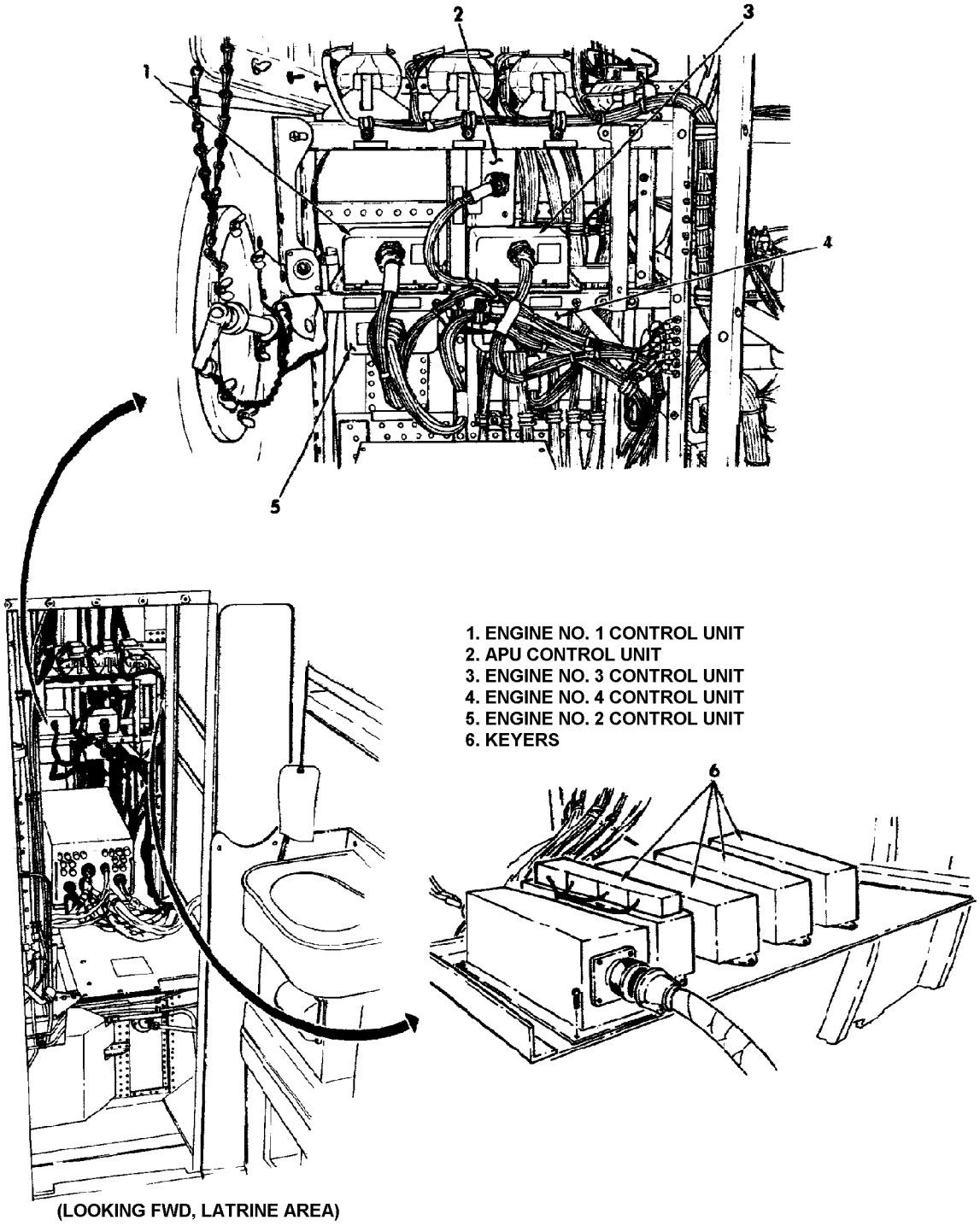

Engine and APU Fire and Pylon Overheat Warning System Control Units

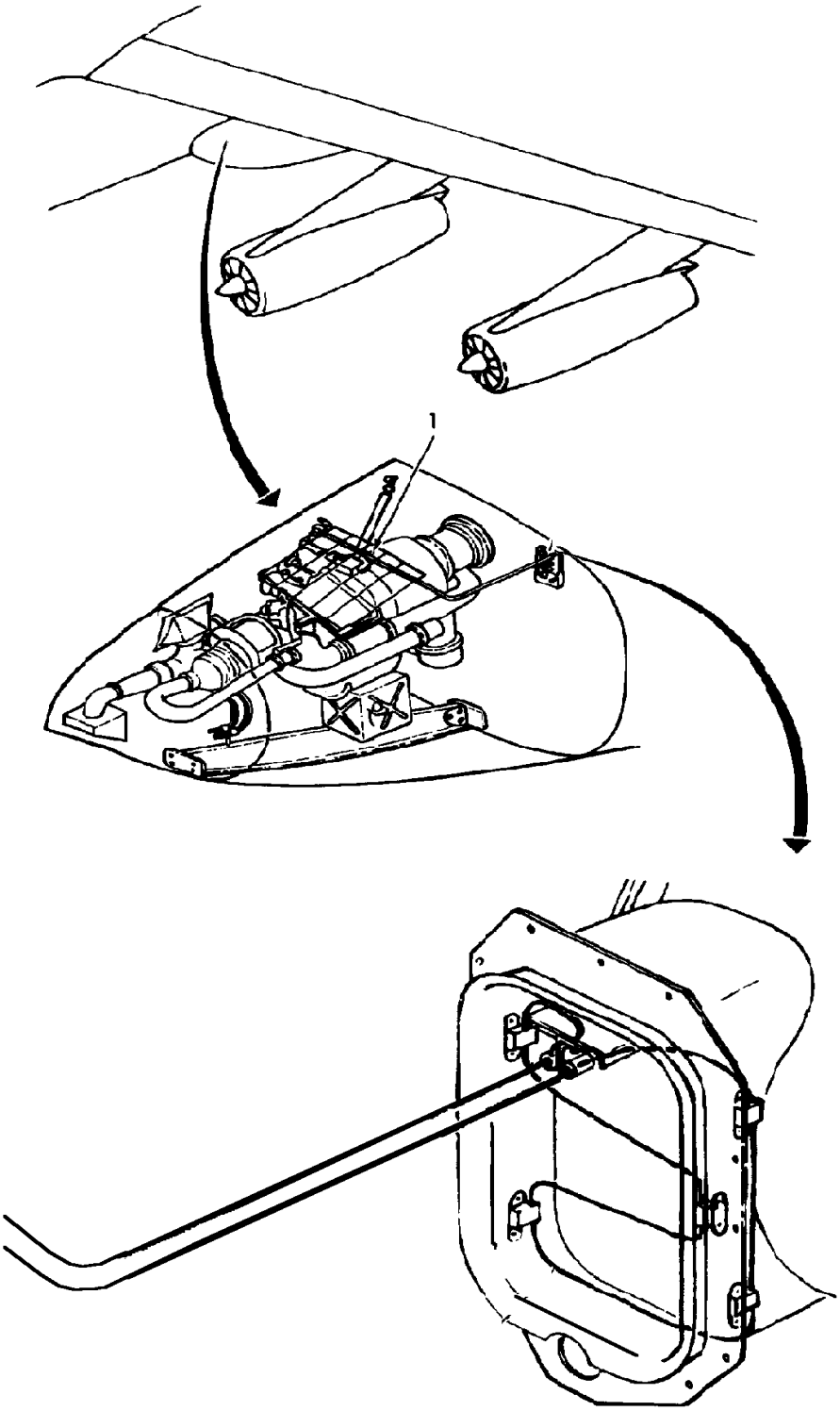

APU Fire and Warning Detector Element Location

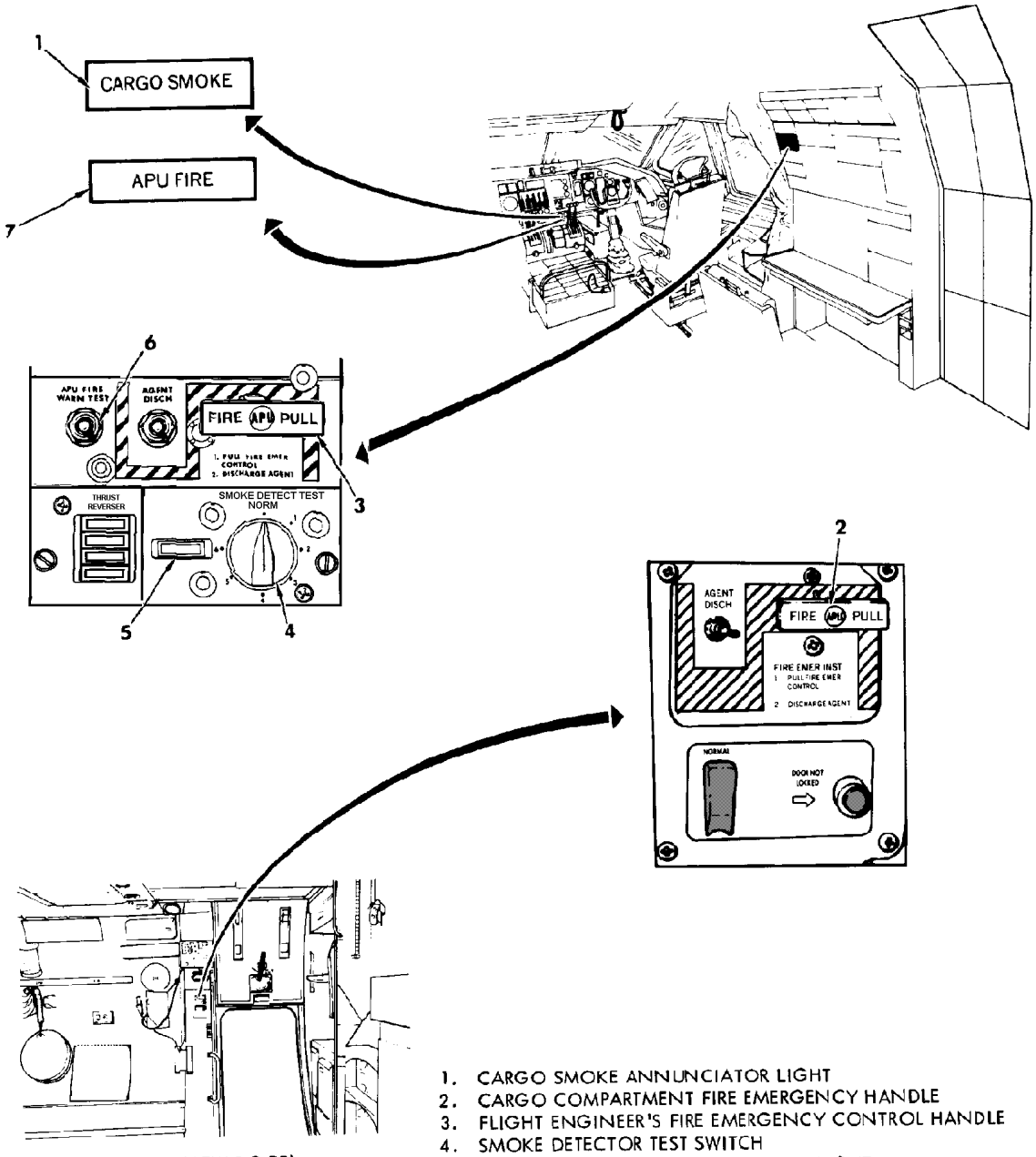

(FWD CREW DOOR)

1. CARGO SMOKE ANNUNCIATOR LIGHT
2. CARGO COMPARTMENT FIRE EMERGENCY HANDLE
3. FLIGHT ENGINEER'S FIRE EMERGENCY CONTROL HANDLE
4. SMOKE DETECTOR TEST SWITCH
5. FLIGHT ENGINEER'S CARGO SMOKE LIGHT
6. APU FIRE WARN TEST SWITCH
7. APU FIRE ANNUNCIATOR LIGHT

APU Fire Warning & Smoke Detector System Component Locations

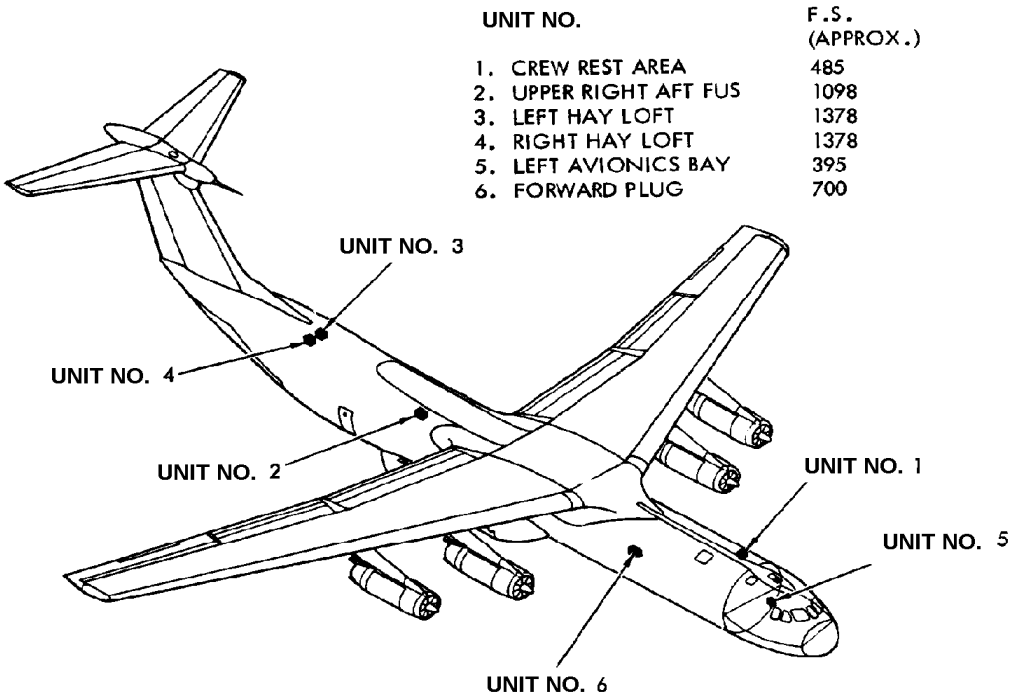

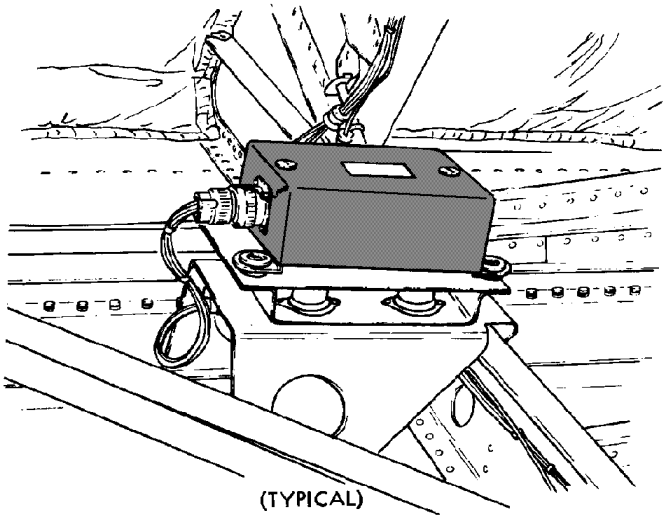

Smoke Detector Locations

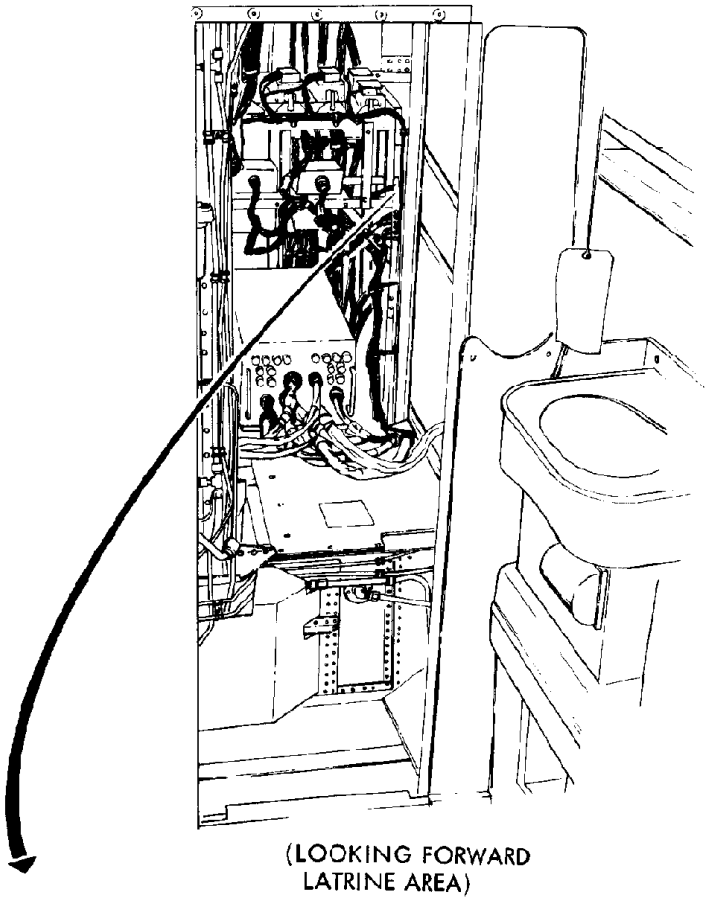

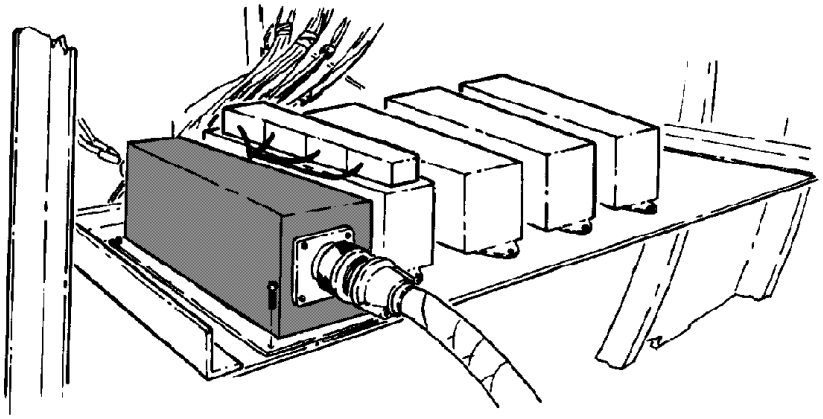

SMOKE DETECTOR CONTROL AMPLIFIER

Smoke Detector System Control Amplifier Location

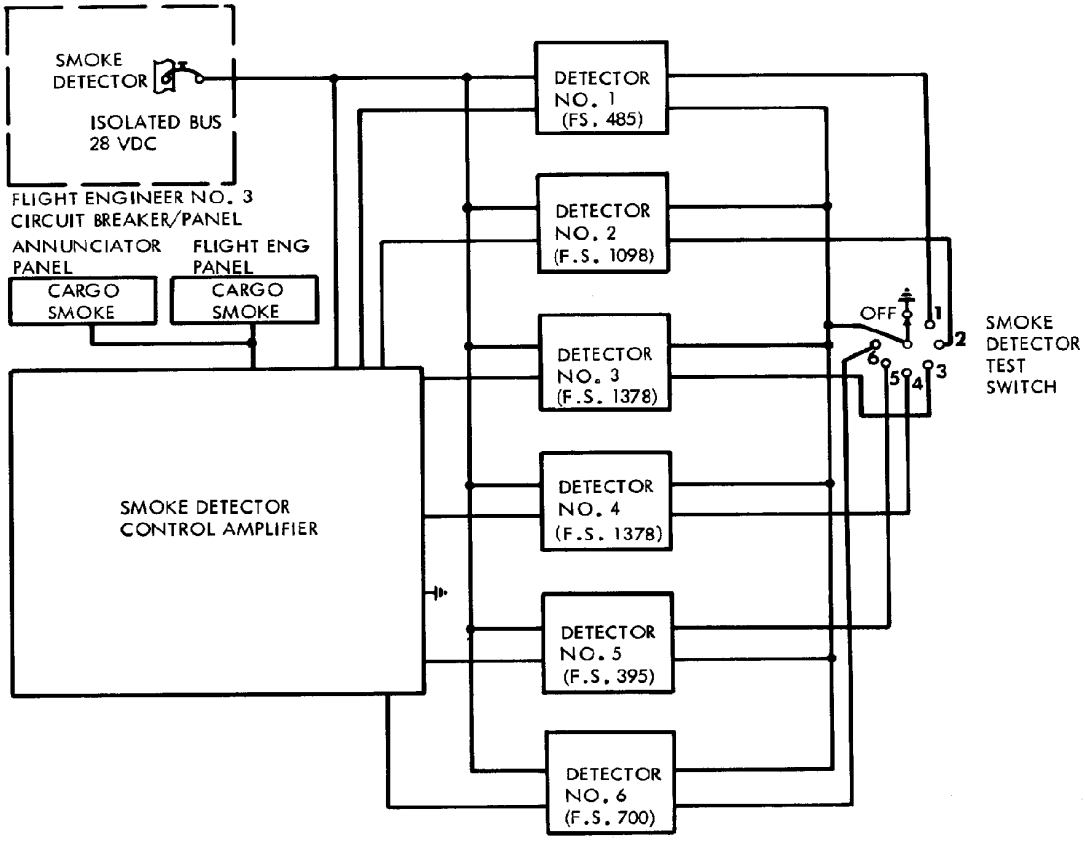

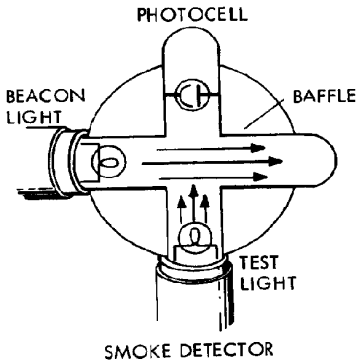

Smoke Detector Schematic Diagrams

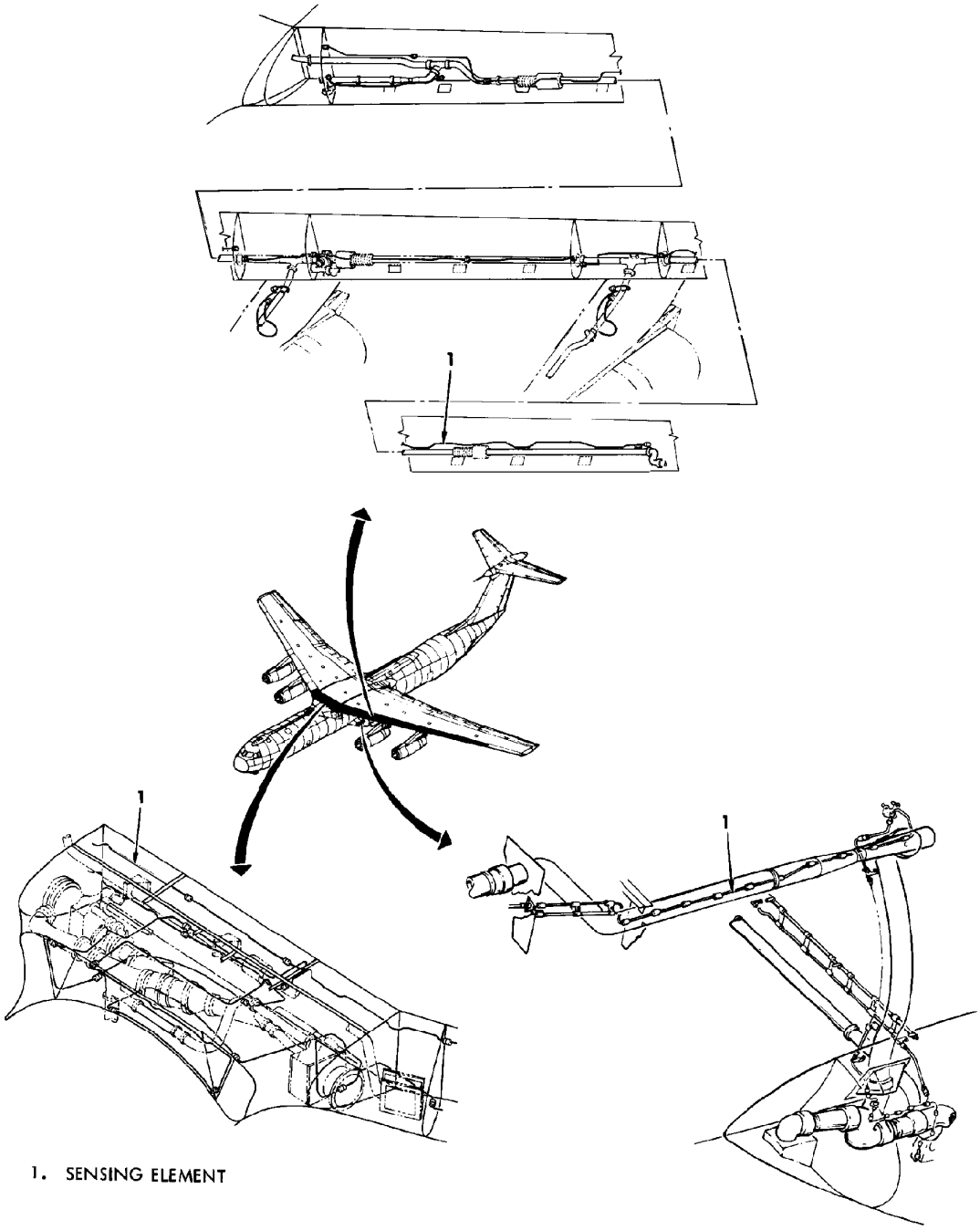

Bleed Air Overheat Warning System Sensing Element Location

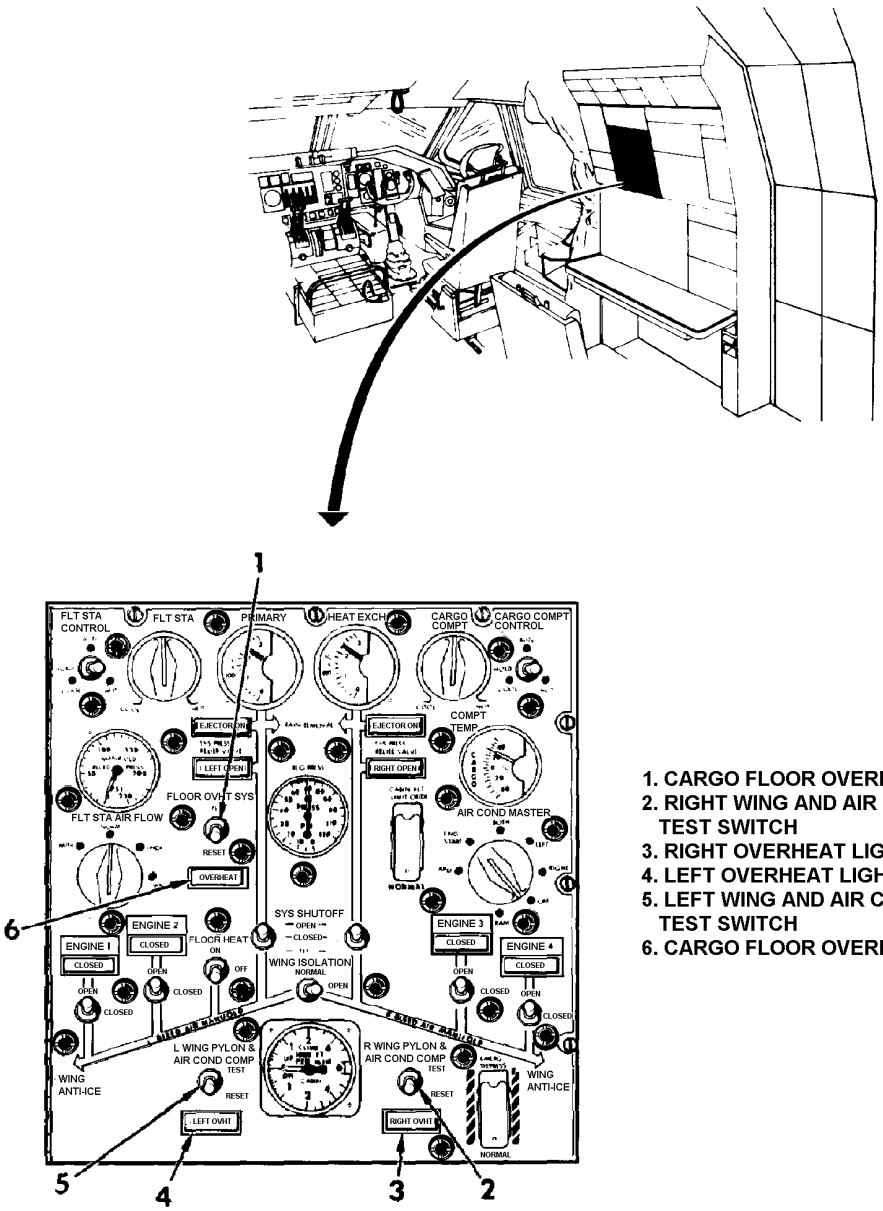

1. CARGO FLOOR OVERHEAT TEST SWITCH
2. RIGHT WING AND AIR CONDITION OVERHEAT TEST SWITCH
3. RIGHT OVERHEAT LIGHT
4. LEFT OVERHEAT LIGHT
5. LEFT WING AND AIR CONDITION OVERHEAT TEST SWITCH
6. CARGO FLOOR OVERHEAT LIGHT

Flight Engineer's Environmental Control Panel

Fire Extinguishing Systems

The engine nacelles and APU compartment have fire extinguishing systems. The fire extinguishing agent used is dibromodifluoromethane (DB). It is contained in bottles mounted in the aft end of the outboard pylons. The agent for the APU compartment is contained in a bottle mounted in the left wheel well compartment. The DB in the left outboard pylon is used to extinguish fires in the No. 1 or No. 2 engine. The DB in the right outboard pylon is for the No.3 nacelle or No.4 engine nacelle. Extinguishing agent is discharged into the fire zone by actuating the agent discharge switch. This occurs after the fire emergency control handle has been pulled. Six portable extinguishers are installed in the flight station and cargo compartment for use by the crew.

a. Engine Nacelle Fire Extinguishing System

Control of the engine nacelle fire extinguishing system is by four agent discharge switches. The four agent discharge switches are located behind the four engine fire emergency control handles. When the control handles are in normal, the agent switches are covered by the control handles. When a control handle is pulled, its agent discharge switch is exposed. The two selector switches determine which bottle will be discharged into the engine nacelle. Each switch has two positions, ALTERNATE and NORMAL.

b. APU Fire Extinguishing System

The APU fire extinguisher is controlled by APU fire emergency control handles and the APU AGENT DISCHARGE switch. These items are located on the flight engineer’s panel and in the cargo compartment. The discharge switch is next to the control handle. However, the discharge switch cannot fire the squib unless the control handle has been pulled. If a fire occurs in the APU, one of the control handles is pulled. This shuts down the APU. It also closes the door and completes a circuit from the isolated DC bus to the discharge switch. When the discharge switch is pressed, a circuit is completed to the squib on the bottle.

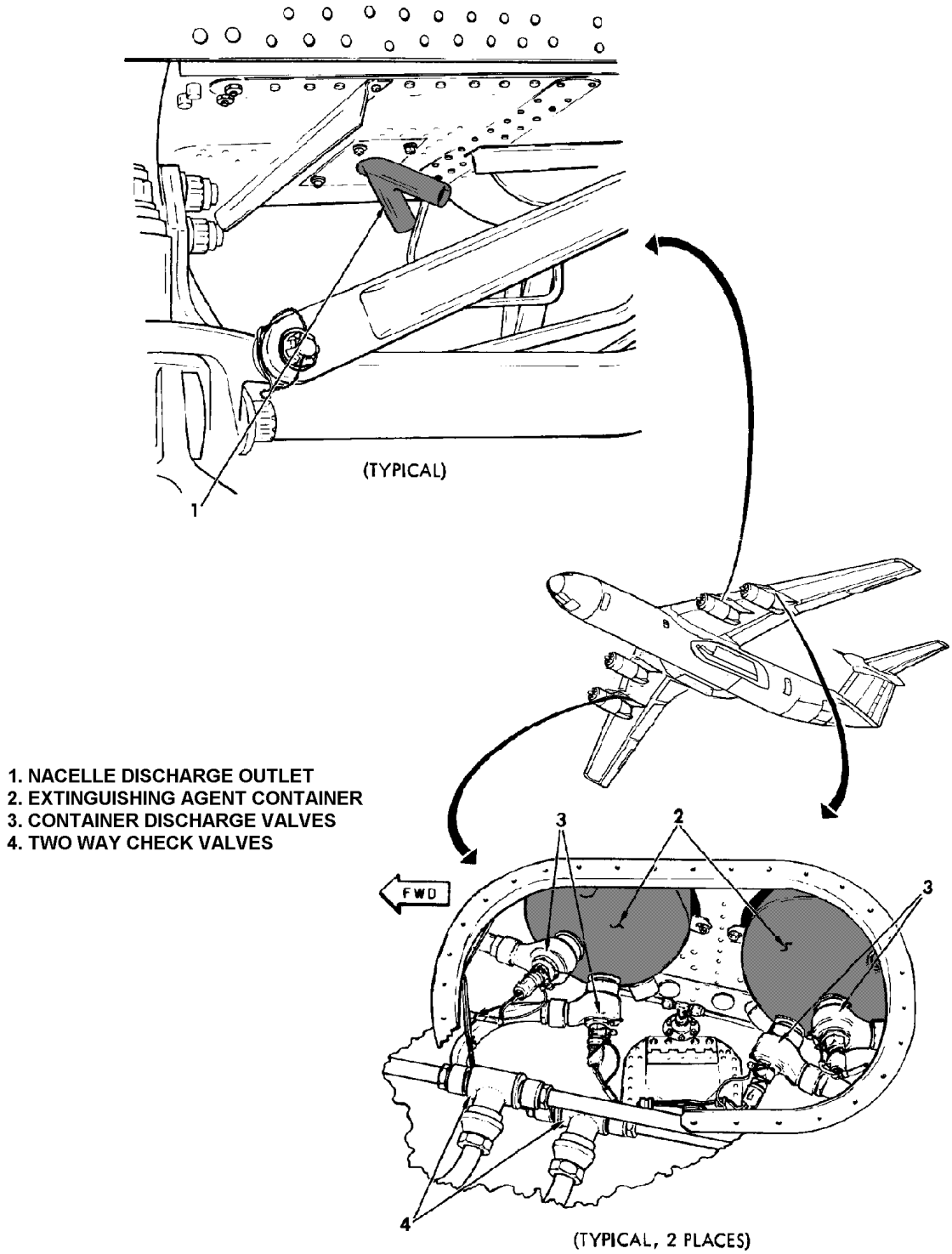

Engine Nacelle Fire Extinguishing System Component Locations

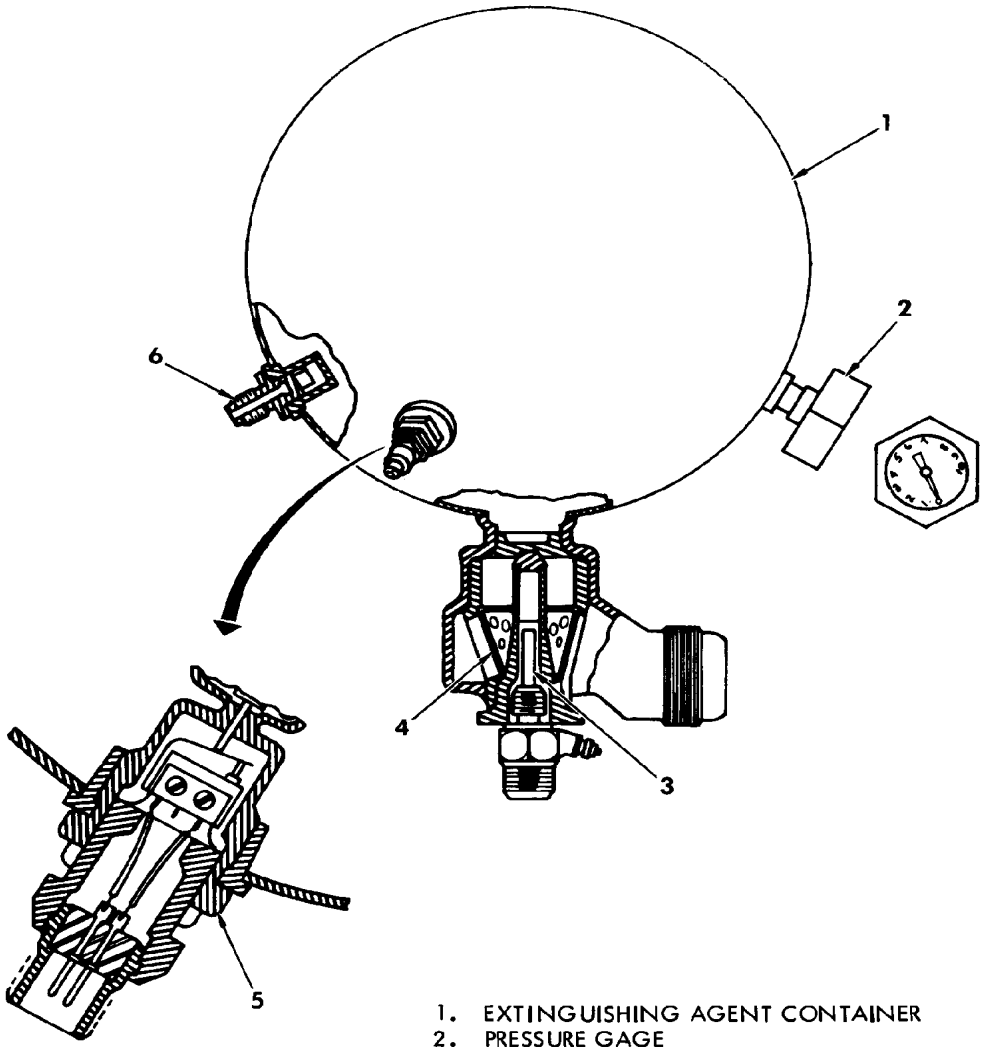

1. EXTINGUISHING AGENT CONTAINER
2. PRESSURE GAGE
3. CARTRIDGE ASSEMBLY
4. SCREEN
5. PRESSURE SWITCH
6. FILL PORT AND THERMAL RELIEF VALVE

Fire Extinguishing System Agent Container

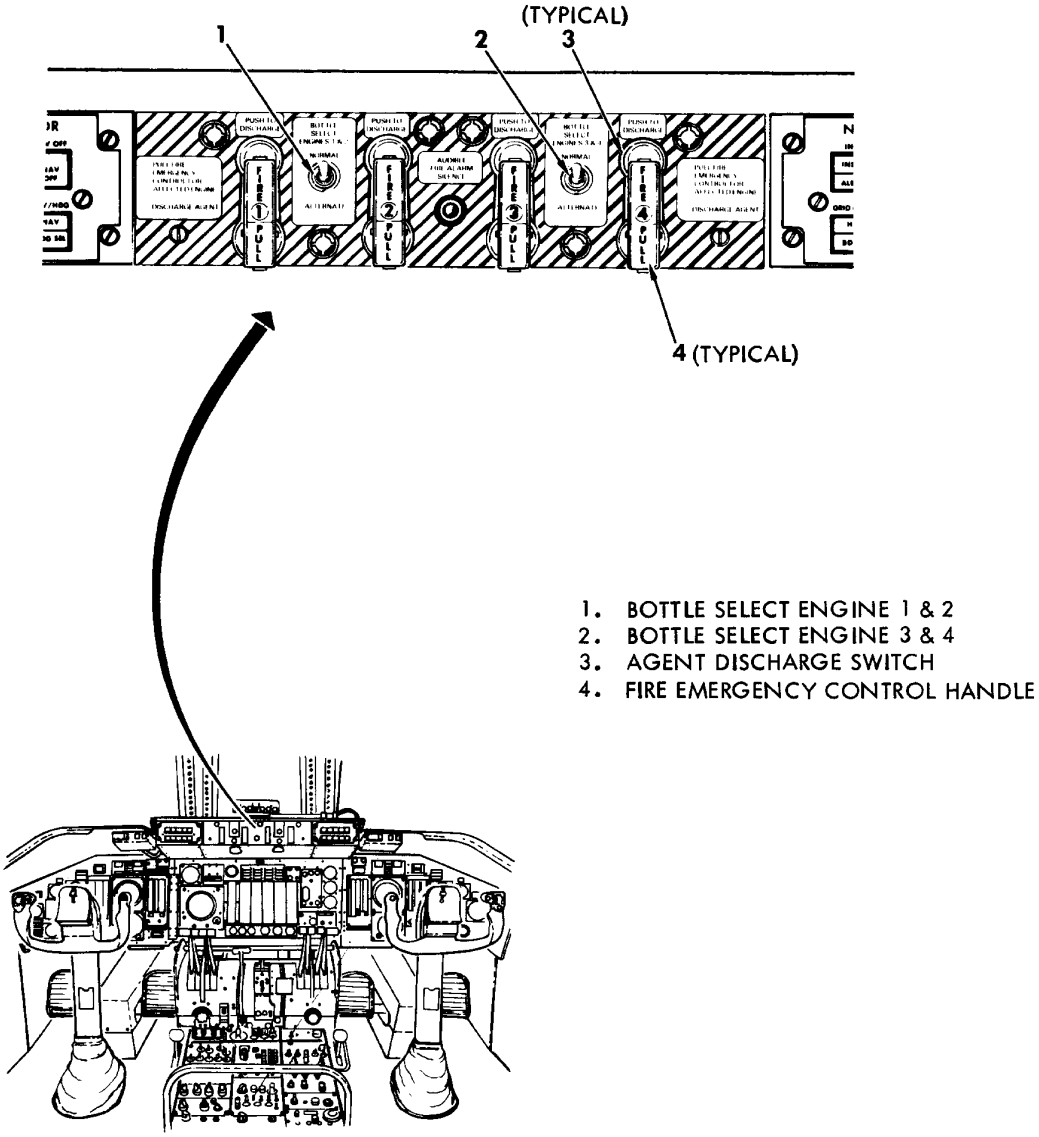

Engine Nacelle Fire Extinguishing System Controls

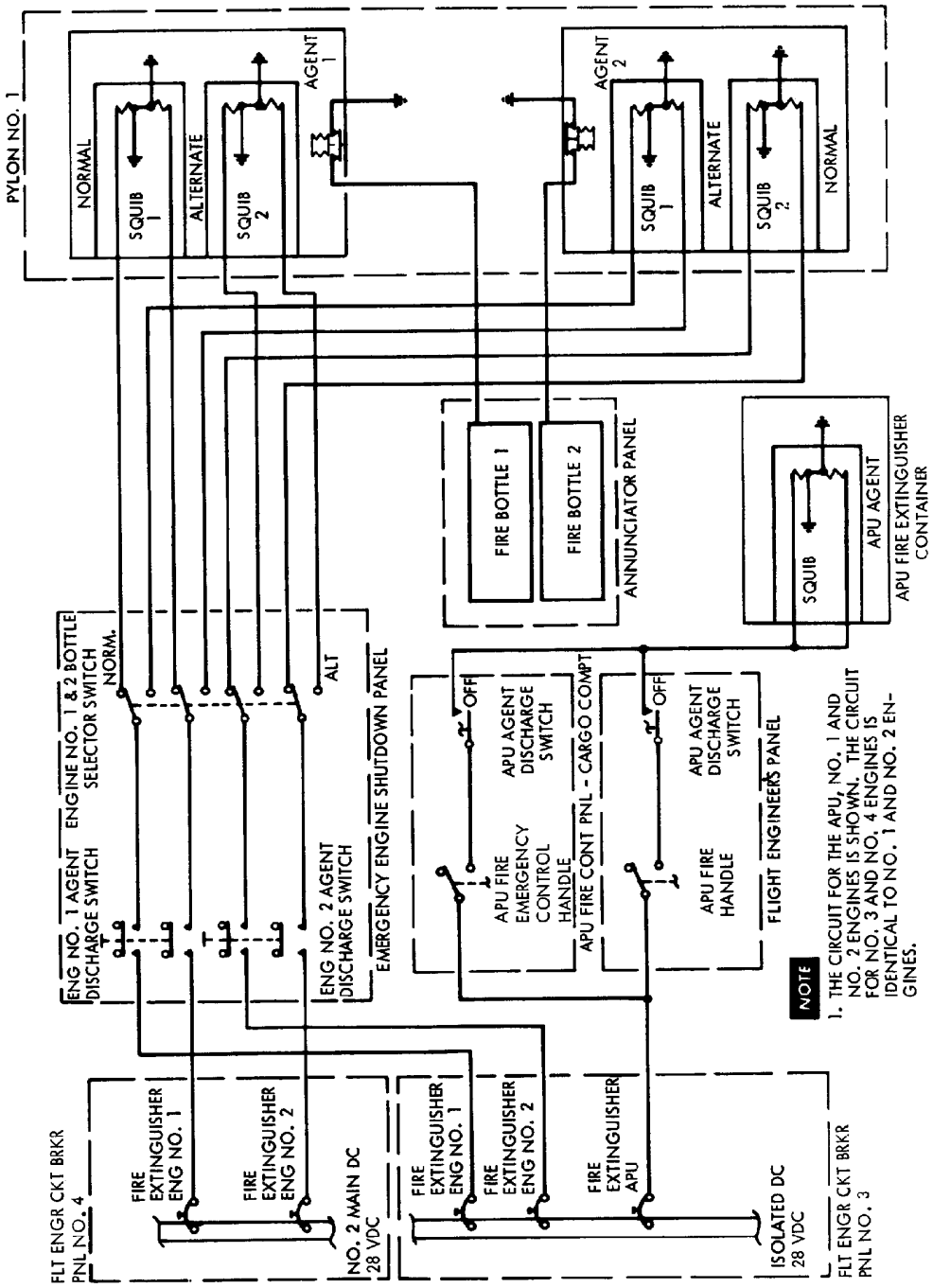

Engine and APU Fire Extinguishing Circuit Schematic Diagram

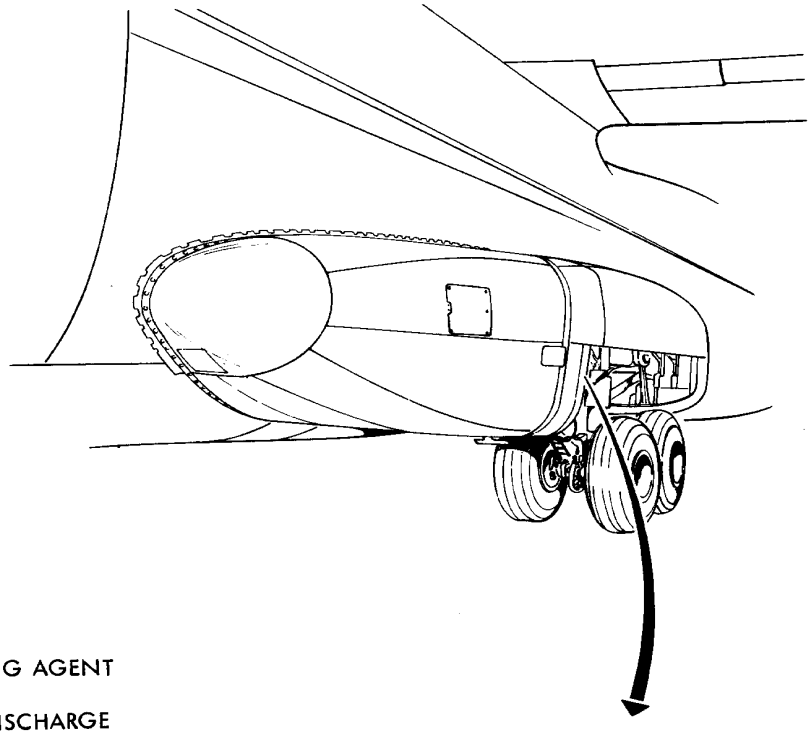

1. EXTINGUISHING AGENT CONTAINER
2. CONTAINER DISCHARGE VALVE
3. DISCHARGE SQUIB

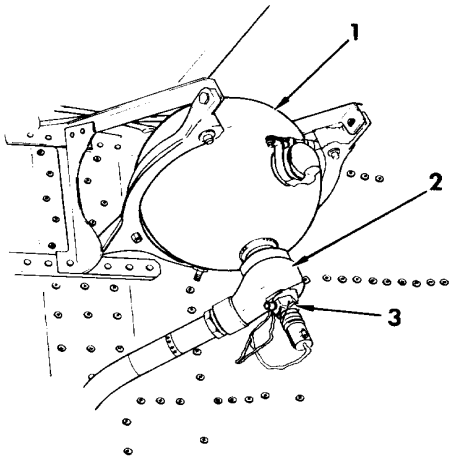

APU Fire Extinguishing System Component Locations

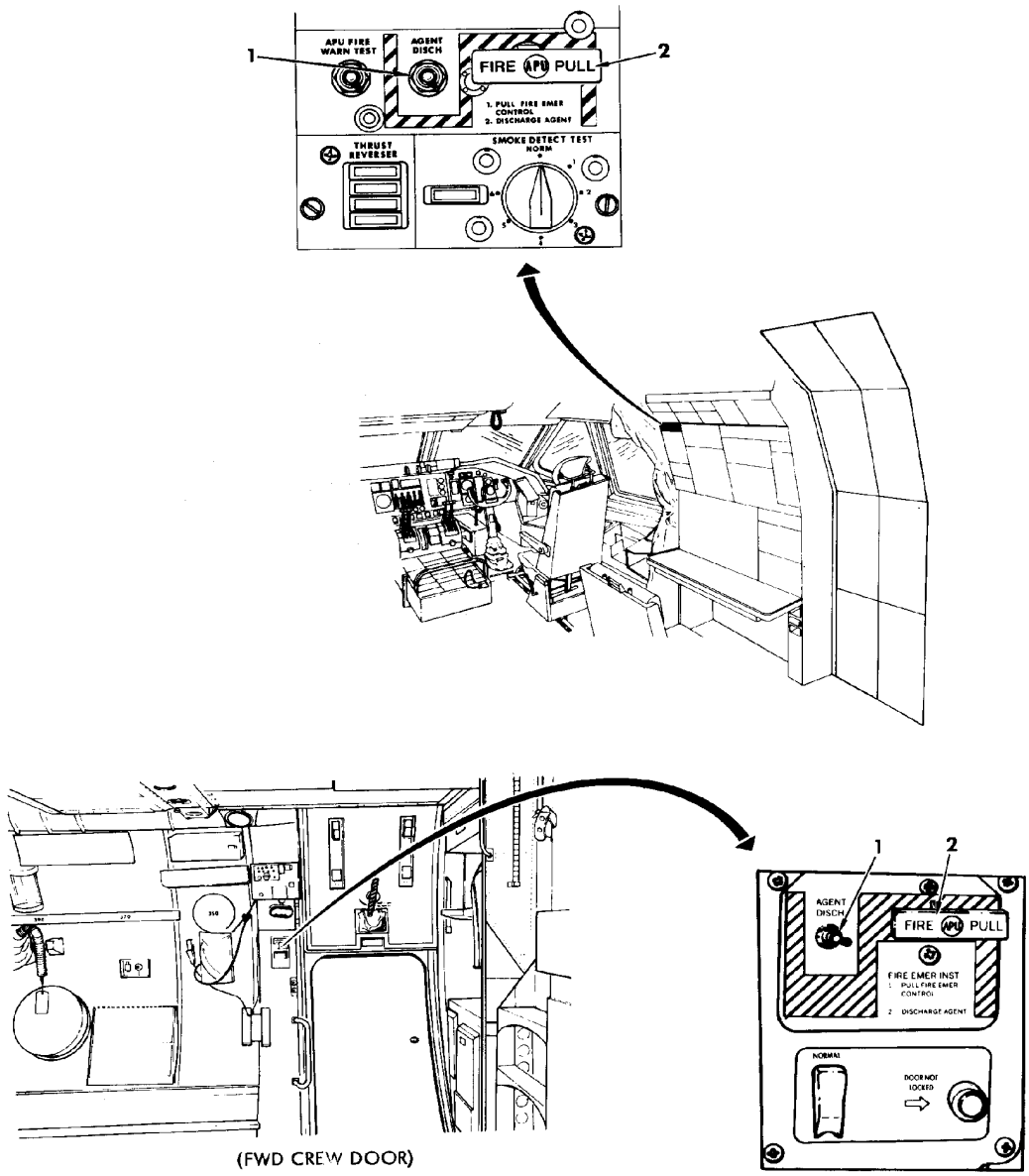

1. AGENT DISCHARGE SWITCH
2. FIRE EMERGENCY CONTROL HANDLE

APU Fire Extinguishing System Controls

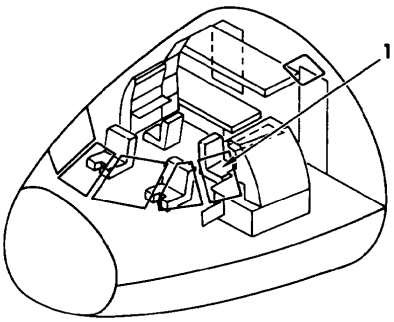

1. PORTABLE FIRE EXTINGUISHERS

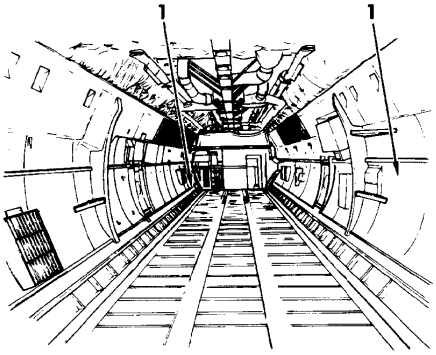

AFT CARGO COMPARTMENT (LOOKING FWD)

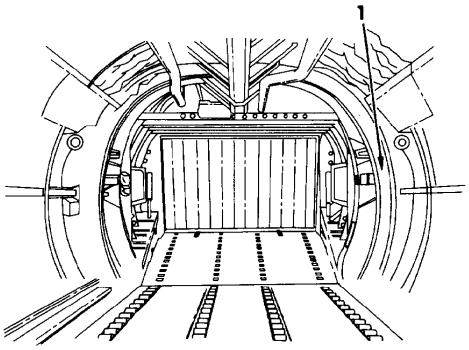

AFT CARGO COMPARTMENT (LOOKING AFT)

Portable Fire Extinguisher Locations

NOTES

FLIGHT CONTROL SYSTEM

General Description

The flight control system of the C-141 airplane includes the primary and secondary flight controls, associated cockpit controls, and the stall prevention system. The overall functions and operation of the flight control systems are described in this section. A more detailed description of each subsystem is presented in subsequent sections of this manual.

Primary Flight Controls

The primary flight controls include the ailerons, rudder, elevators, and the associated power and control components of each. They are utilized for maintaining attitude and directional control of the airplane. The ailerons are controlled by turning the control wheel. The elevators are controlled by fore and aft movement of the control column. The rudder is controlled by pushing the rudder pedals. Two complete sets of controls are provided, one for the pilot and one for the copilot. Either set can be used for airplane control. Cockpit control output is transmitted to the power control units through mechanical rods and cables.

Secondary Flight Controls

The secondary flight controls include the horizontal stabilizer (pitch trim), the wing flaps, the spoilers, and the associated power and control components of each. Pitch trim is controlled electrically, hydraulically, or electro-hydraulically by various switches and/or control levers. The flaps are controlled by movement of the flap control handle. The spoilers are controlled by movement of the spoiler control handle. Depending upon the system, output from the cockpit controls is transmitted to the power control units through wires, mechanical linkages, and cables.

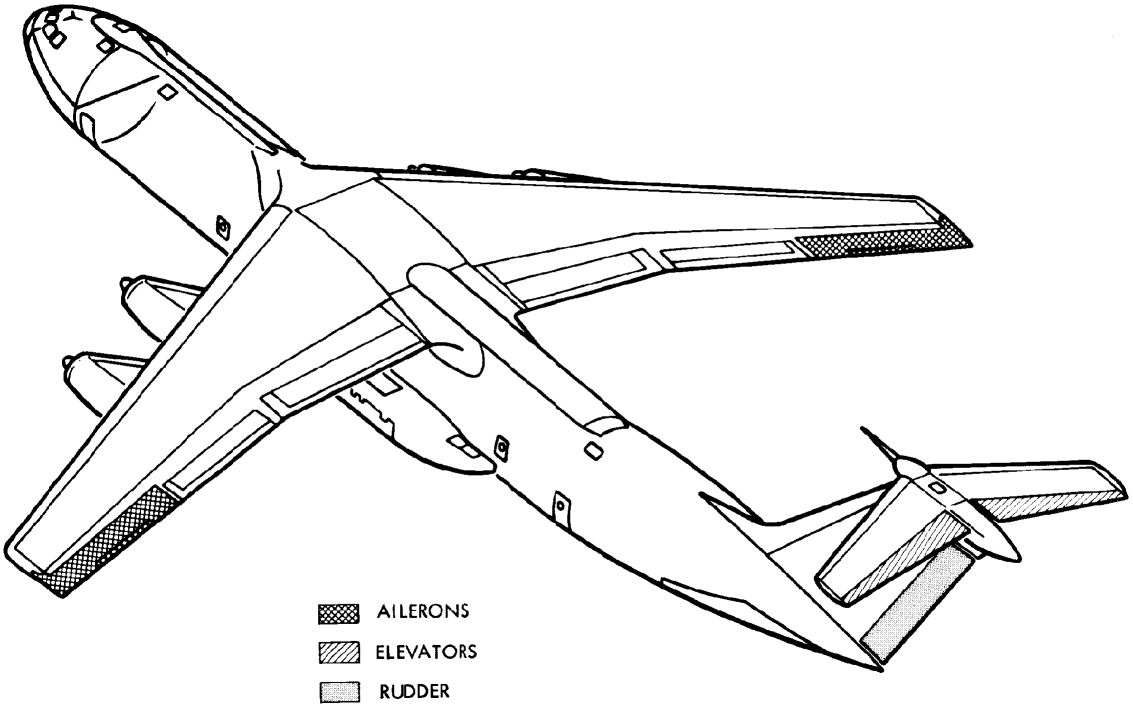

Primary Flight Controls

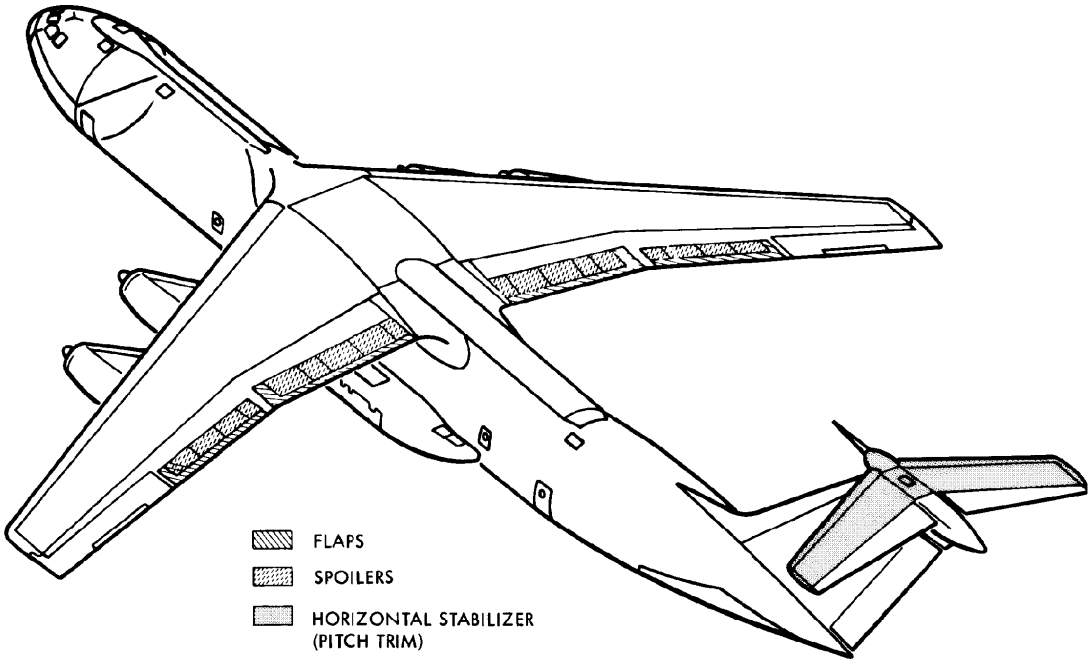

Secondary Flight Controls

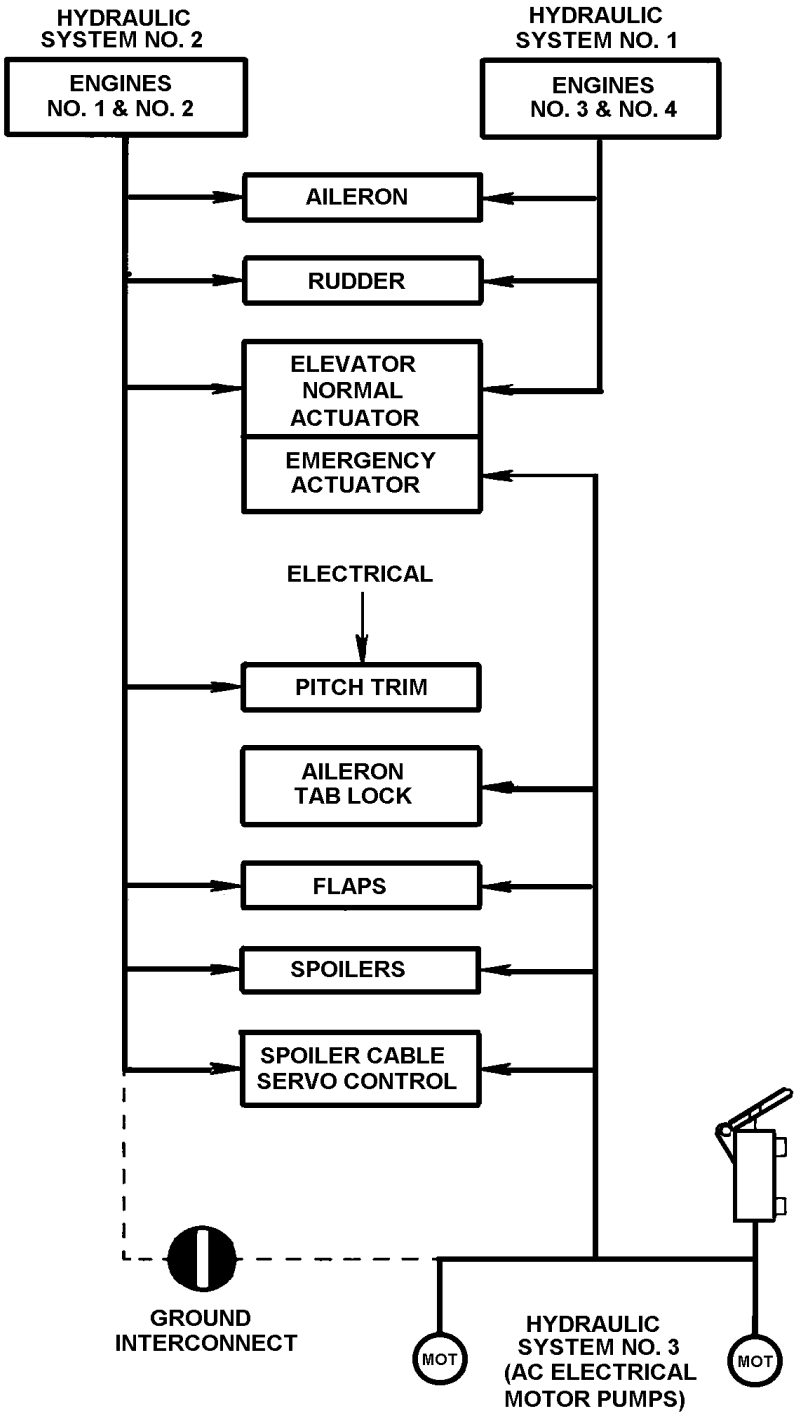

Flight Control Hydraulic Power Distribution

Aileron Subsystem

Roll motion of the airplane is controlled by two ailerons. The two ailerons are in turn normally controlled by the pilot's and copilot's control wheels. Control wheel rotation of approximately 90 degrees in either direction from neutral moves the ailerons through their full travel range. The travel limits of the ailerons are 25 degrees up and 15 degrees down from the faired positions. A servotab is hinged to the aileron rear beam. The servotabs remain faired with the ailerons during normal operation. During manual operation of the ailerons, the servotabs move 11.5 degrees up or 14.8 degrees down when the control wheels are rotated 120 degrees in either direction. The aileron subsystem includes the aileron control system (including the servotabs) and the aileron trim system. The latter system is used for roll trim. The ailerons attach to the outer wing rear beam. They form part of the trailing edges of the wings. The ailerons are simultaneously deflected up or down, but move in opposite directions to produce roll motion. Each aileron is normally actuated by a power control unit powered by the No. 1 and No. 2 hydraulic systems. The power control unit is controlled by the pilot's and copilot's control wheels. Movement of the control wheels is transmitted through dual cable systems to a common input quadrant assembly mounted on the rear beam of the center wing. Pushrod and wing cable systems then transmit motion from the input quadrant to the power control units, which in turn actuate the aileron control surfaces. An interconnect rod between the pilot's and copilot's tension regulators and the common input quadrants serves to link up what are essentially independent control systems. Automatic roll axis control is provided by an autopilot servo connected to the input quadrant by a closed loop cable.

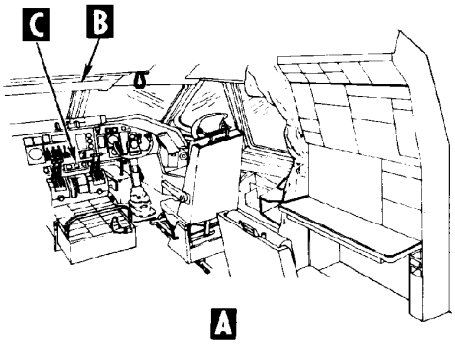

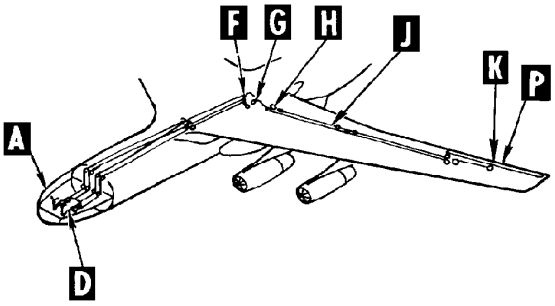

CABLE CODE	DESCRIPTION	FUNCTION FOR TENSION IN CABLE
ALA	AILERON LEFT SIDE	MOVES L AILERON UP AND R AILERON DOWN
ALB	AILERON LEFT SIDE	MOVES L AILERON DOWN AND R AILERON UP
ARA	AILERON RIGHT SIDE	MOVES L AILERON UP AND R AILERON DOWN
ARB	AILERON RIGHT SIDE	MOVES L AILERON DOWN AND R AILERON UP

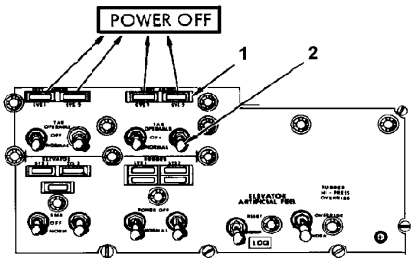

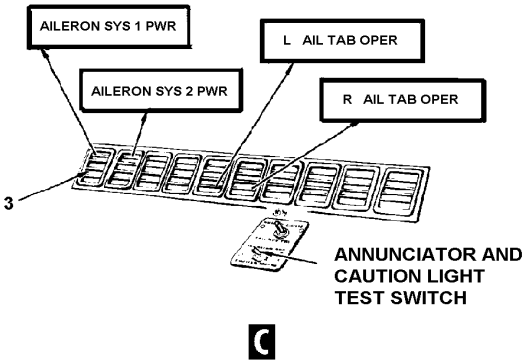

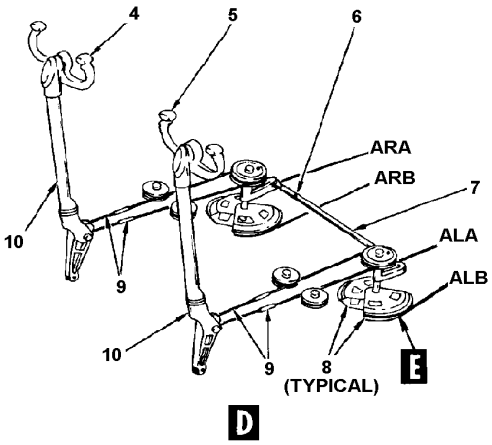

1. OVERHEAD WARNING LIGHTS
2. POWER CONTROL SWITCHES
3. ANNUNCIATOR LIGHTS
4. COPILOT'S CONTROL WHEEL
5. PILOT'S CONTROL WHEEL
6. SHEAR RIVIT
7. INTERCONNECT ROD
8. TENSION REGULATOR
9. CONTROL COLUMN CABLES
10. CONTROL COLUMN

Aileron Control System Component Locations (Sheet 1 of 4)

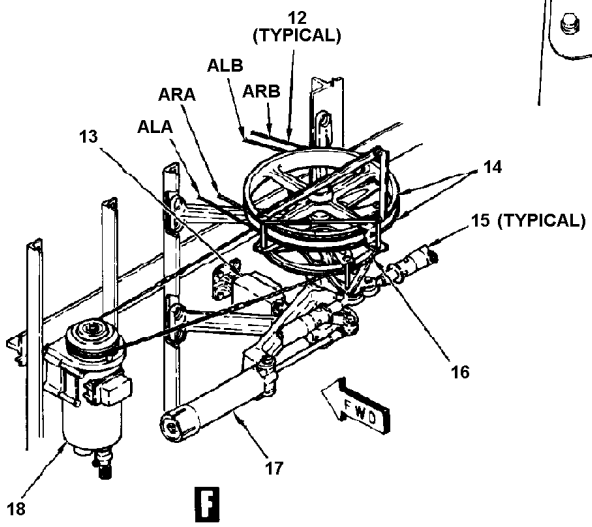

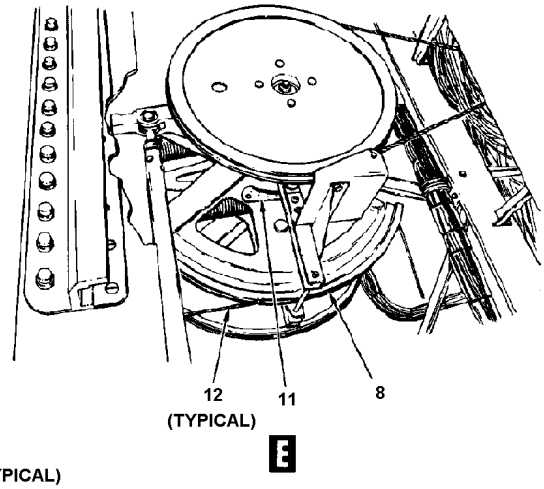

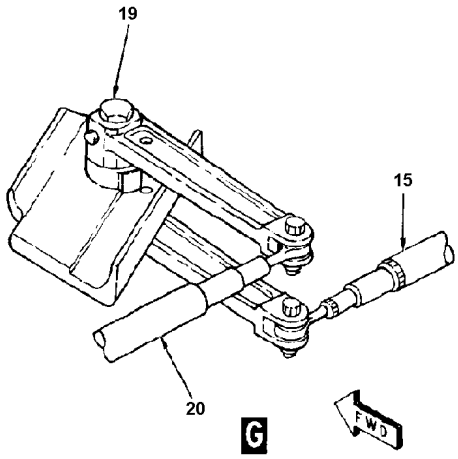

8. TENSION REGULATOR
11. RIG TENSION SCALE
12. FUSELAGE CONTROL CABLE
13. TRIM ACTUATOR (REF)
14. INPUT QUADRANT ASSEMBLY
15. PUSHROD
16. AUTOPILOT QUADRANT
17. ARTIFICIAL FEEL SPRING CARTRIDGE
18. AUTOPILOT SERVOMOTOR
19. PRESSURE SEAL BELLCRANK
20. PUSHROD
21. WING CABLE QUADRANT ASSEMBLY
22. WING CABLES
23. POWER CONTROL UNIT INPUT QUADRANT ASSEMBLY

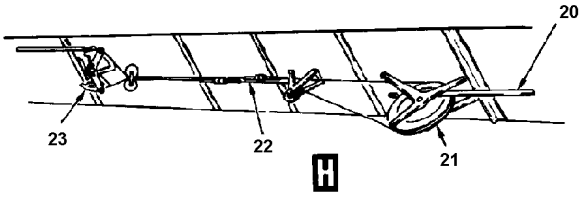

Aileron Control System Component Locations (Sheet 2 of 4)

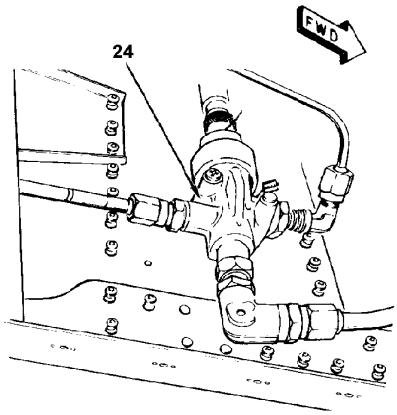

J

(LOOKING UP AND OUTBOARD, LANDING LIGHT PANEL LOWERED)

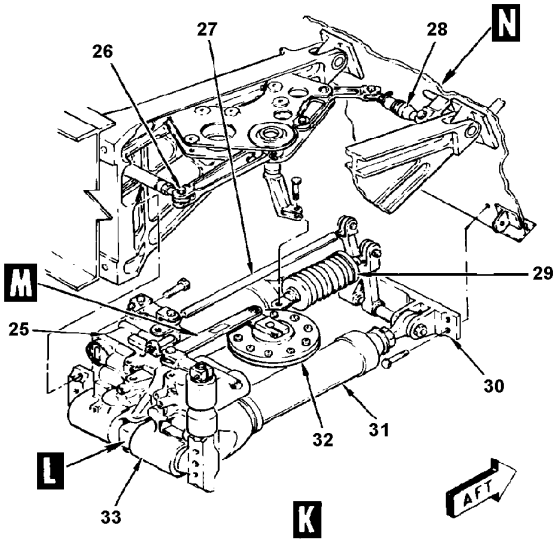

K

POWER CONTROL UNIT

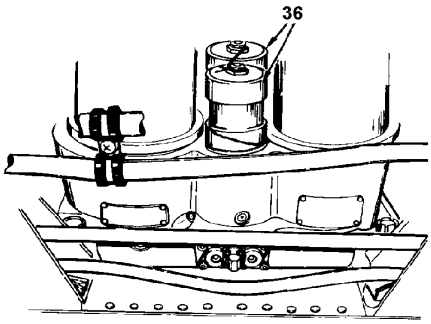

L

(LOOKING UP AND FORWARD)

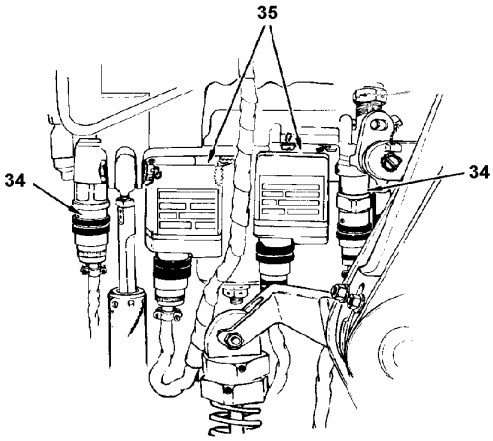

M

(LOOKING DOWN)

24. TAB SOLENOID VALVE
25. SERVO CONTROL VALVE
26. INPUT LINKAGE
27. INPUT AND FOLLOWUP LEVER
28. SWIVEL DRIVE FITTING
29. BUNGEE ASSEMBLY
30. AILERON HINGE PLATE
31. ACTUATOR CYLINDER
32. VISCOUS DAMPER
33. HYDRAULIC MANIFOLD
34. LOW PRESSURE SWITCHES
35. SHUTOFF AND BYPASS VALVE ACTUATORS
36. HYDRAULIC FILTERS

Aileron Control System Component Locations (Sheet 3 of 4)

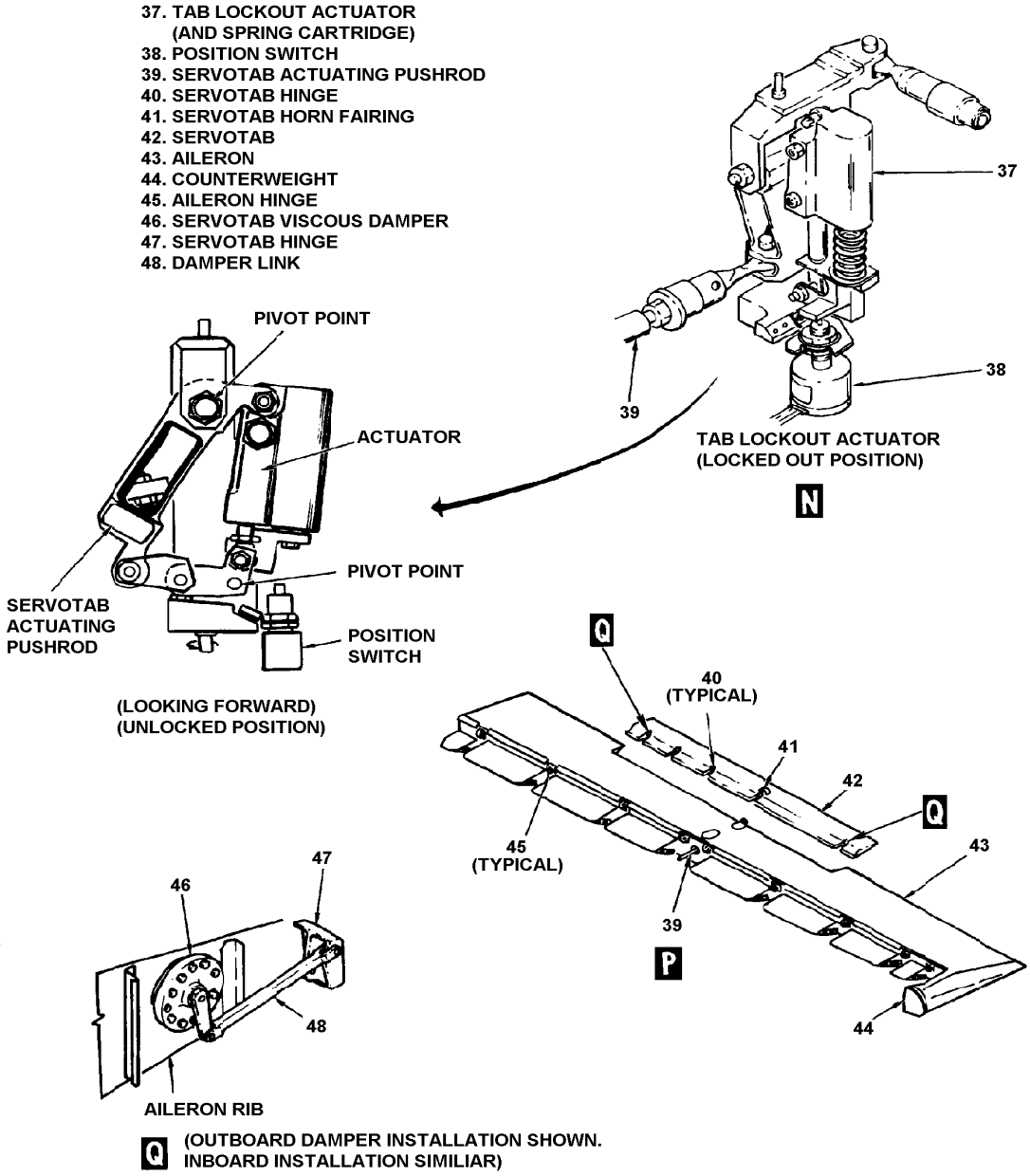

Aileron Control System Component Locations (Sheet 4 of 4)

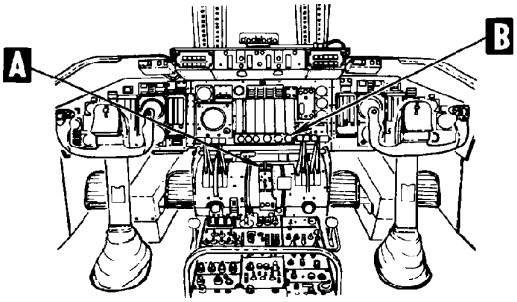

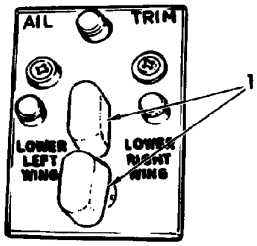

A

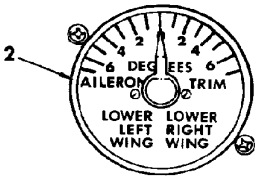

B

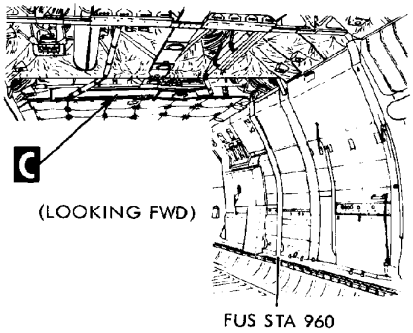

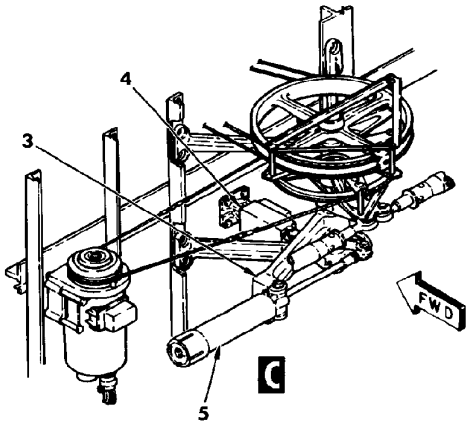

1. CONTROL SWITCHES
2. POSITION INDICATOR
3. FEEL SPRING CARTRIDGE LEVER ARM
4. TRIM ACTUATOR (AND POSITION TRANSMITTER)
5. ARTIFICIAL FEEL SPRING CARTRIDGE

Aileron Trim System Component Locations

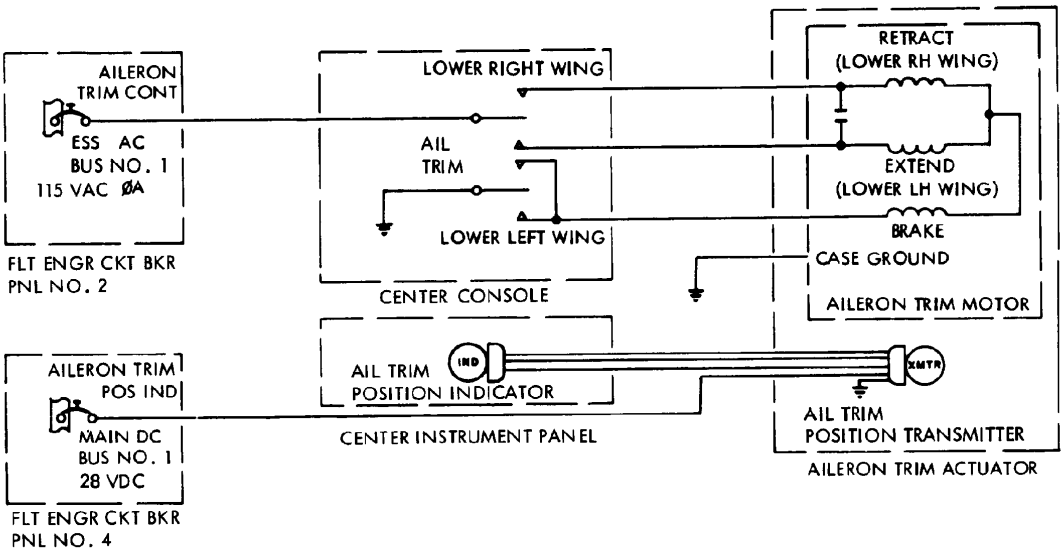

Aileron Trim System Schematic Diagram

Rudder Subsystem

Directional control of the airplane, called yaw, is provided by the rudder. The rudder is controlled by the two sets of rudder pedals. Depressing one pedal at a time moves the rudder through its full travel range. The travel limits of the rudder are 35 degrees in both directions from neutral. The rudder subsystem includes the rudder control system and the rudder trim system. The latter is used for yaw trim. The rudder is hinged to the rear beam of the vertical stabilizer. The rudder is normally actuated by a power control unit powered by the No. 1 and No. 2 hydraulic systems. The power control unit is controlled by the pilot's and copilot's rudder pedals. Movement of the rudder pedals is transmitted through dual cable systems to a common input quadrant assembly located near the rudder yoke. Dual pushrods transmit motion from the input quadrant to the power control unit. In turn, the rudder control surface is deflected left or right. An interconnect rod between the tension regulators and the common input quadrants serves to link up what are essentially independent control systems. Automatic directional control is provided by two autopilot yaw damper servos. These units are linked to the servo valve on the power control unit.

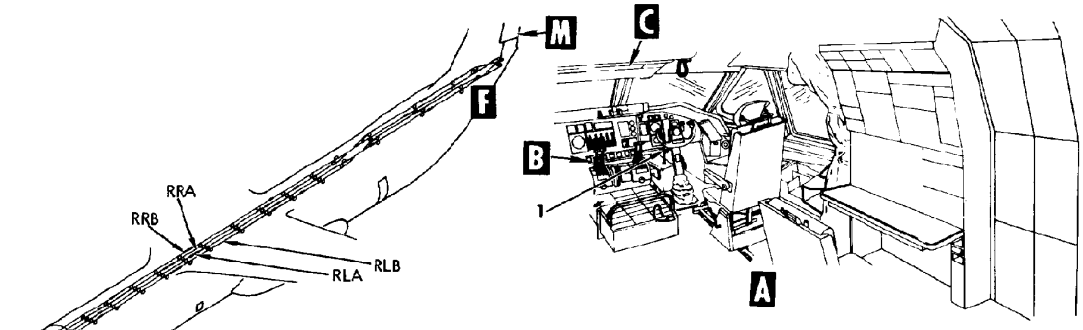

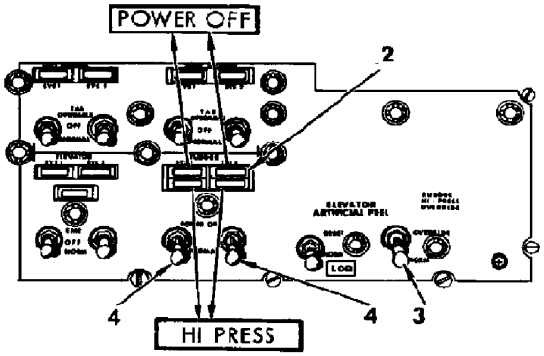

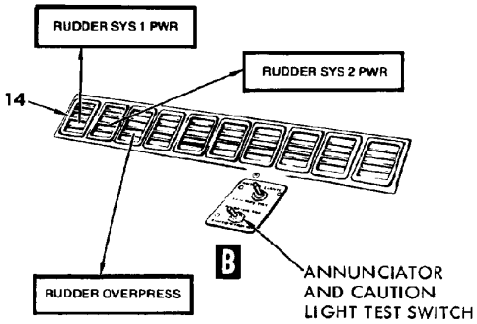

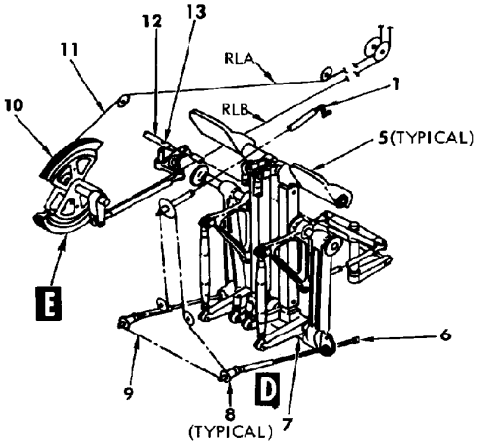

C

CABLE CODE	DESCRIPTION	FUNCTION FOR TENSION IN CABLE
RLA	RUDDER LEFT SIDE	TURNS RUDDER LEFT
RLB	RUDDER LEFT SIDE	TURNS RUDDER RIGHT
RRA	RUDDER RIGHT SIDE	TURNS RUDDER LEFT
RRB	RUDDER RIGHT SIDE	TURNS RUDDER RIGHT

1. PEDAL ADJUSTMENT CRANK
2. OVERHEAD WARNING LIGHTS
3. HI PRESS OVERRIDE SWITCH
4. POWER CONTROL SWITCHES
5. RUDDER PEDALS
6. PEDAL ADJUSTMENT JACKSCREW
7. PEDAL PIVOT SHAFT
8. CHAIN SPROCKET
9. PEDAL ADJUSTMENT CHAIN
10. TENSION REGULATOR
11. CONTROL CABLE
12. INTERCONNECT ROD
13. SHEAR RIVET
14. ANNUNCIATOR LIGHTS

Rudder Control System Component Locations (Sheet 1 of 3)

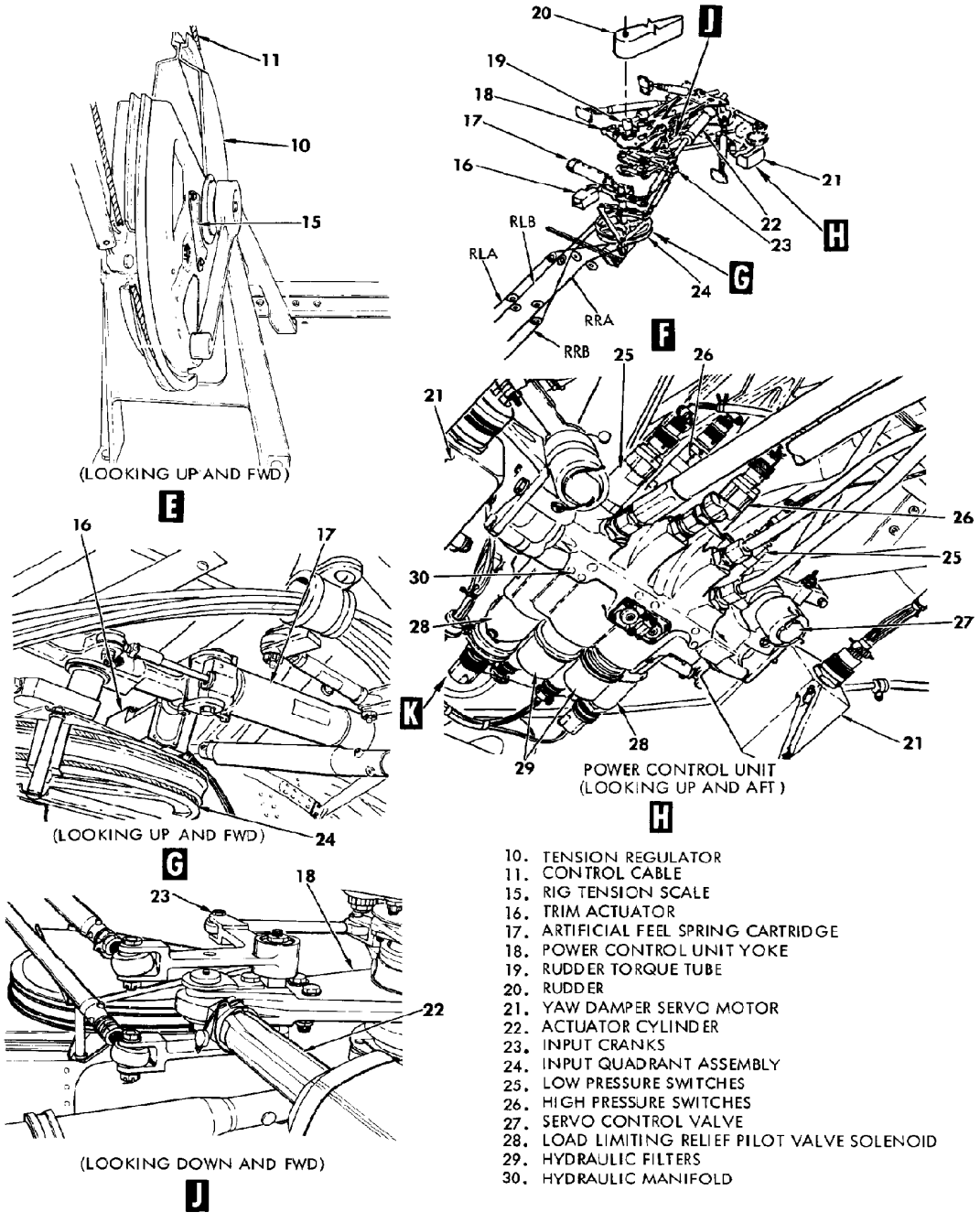

10. TENSION REGULATOR
11. CONTROL CABLE
15. RIG TENSION SCALE
16. TRIM ACTUATOR
17. ARTIFICIAL FEEL SPRING CARTRIDGE
18. POWER CONTROL UNIT YOKE
19. RUDDER TORQUE TUBE
20. RUDDER
21. YAW DAMPER SERVO MOTOR
22. ACTUATOR CYLINDER
23. INPUT CRANKS
24. INPUT QUADRANT ASSEMBLY
25. LOW PRESSURE SWITCHES
26. HIGH PRESSURE SWITCHES
27. SERVO CONTROL VALVE
28. LOAD LIMITING RELIEF PILOT VALVE SOLENOID
29. HYDRAULIC FILTERS
30. HYDRAULIC MANIFOLD

Rudder Control System Component Locations (Sheet 2 of 3)

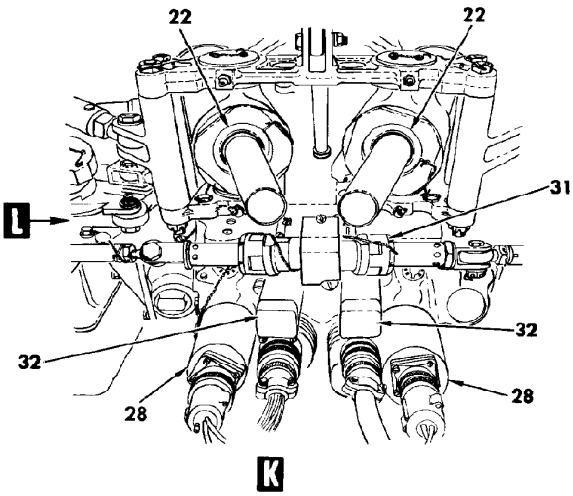

(LOOKING DOWN AND FWD)

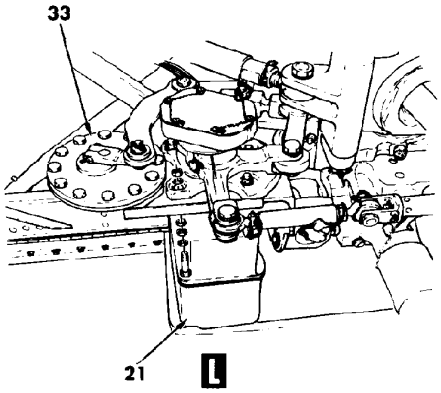

(LOOKING DOWN AND FWD)

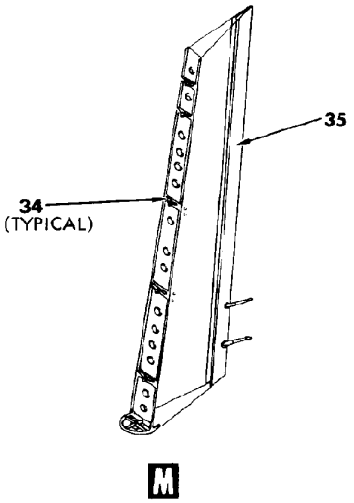

21. YAW DAMPER SERVO MOTOR
22. ACTUATOR CYLINDER
28. LOAD LIMITING RELIEF PILOT VALVE SOLENOID
31. SERVO CONTROL VALVE CENTERING SPRING
32. SHUTOFF AND BYPASS VALVE ACTUATOR
33. VISCOUS DAMPER
34. RUDDER HINGE
35. RUDDER

Rudder Control System Component Locations (Sheet 3 of 3)

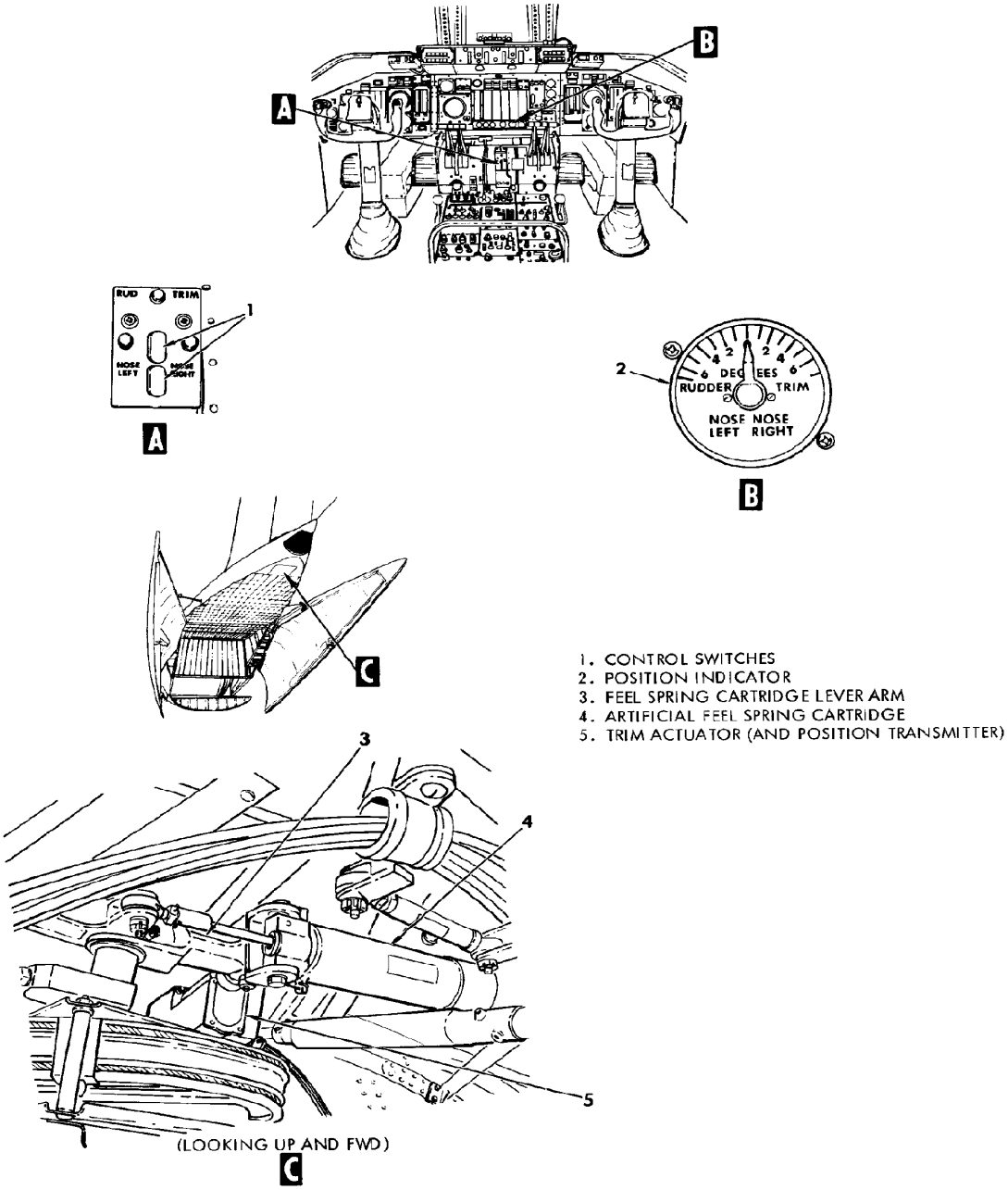

Rudder Trim System Component Locations

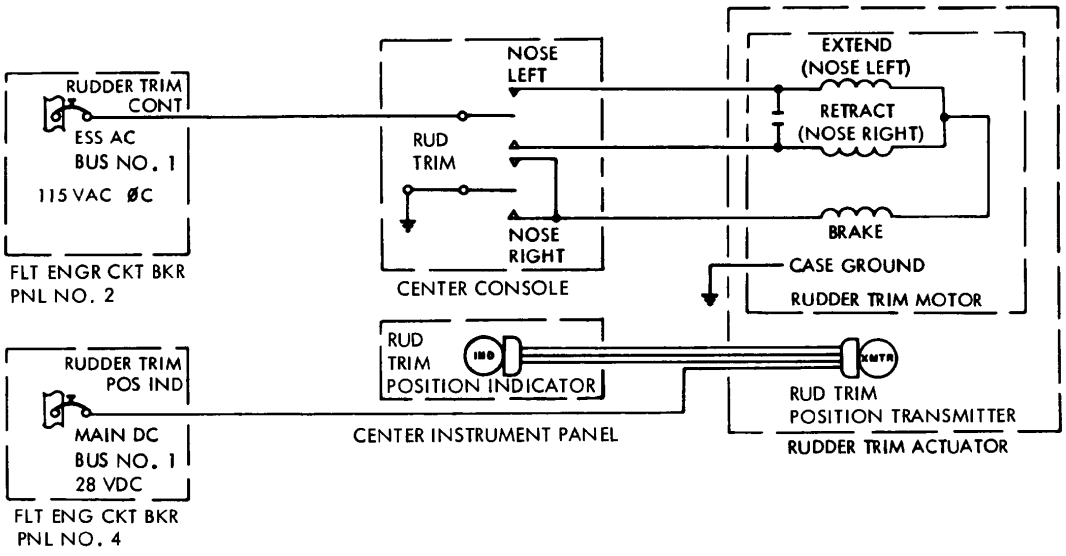

Rudder Trim System Schematic Diagram

Elevator Subsystem

Pitch attitude of the airplane is controlled by two elevators. The two elevators are controlled by the pilot's and copilot's control columns. Control column movement of approximately 5 inches forward and 8-1/2 inches aft of the neutral position moves the elevators through their full travel range. The travel limits of the elevators are approximately 23.5 degrees up and 17.75 degrees down from the faired neutral position. The elevator subsystem includes the elevator control system, the artificial feel system, and the stall prevention system. The elevators are attached to the rear beam of the horizontal stabilizer to form the trailing edges of the horizontal stabilizer. There is one elevator on each side of the horizontal stabilizer bullet. The elevators are simultaneously deflected up or down to produce a nose-up or nose-down attitude of the airplane. The elevators are actuated by a power control unit mounted in the stabilizer bullet. The power control unit is normally powered by the No. 1 and No. 2 hydraulic systems. The unit is controlled by the pilot's and copilot's control columns. Movement of the control columns is transmitted through dual cable systems to a common input quadrant located in the vertical stabilizer near the horizontal stabilizer pivot. Dual pushrods transmit motion from the input quadrant through an idler bellcrank to the power control unit. The elevator control surfaces are in turn deflected by movement of the power control unit actuating cylinders, output pushrods, and torque tubes. An interconnect rod between the pilot's and copilot's tension regulators and the common input quadrants serves to link up what are essentially independent control systems. Automatic pitch axis control is provided by an autopilot servo. It is connected to the input quadrant by a closed loop cable.

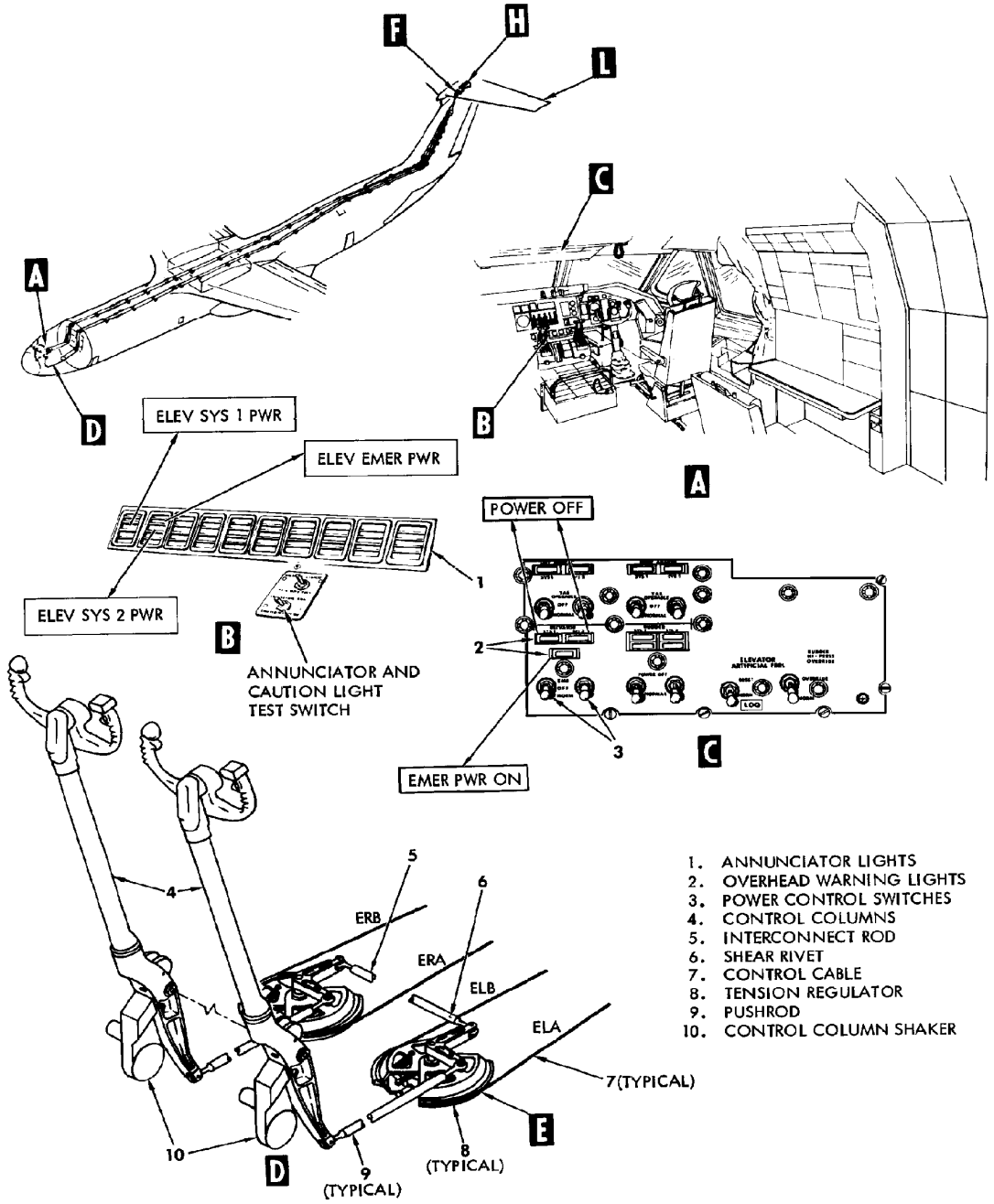

Elevator Control System Component Locations (Sheet 1 of 4)

CABLE CODE	DESCRIPTION	FUNCTION FOR TENSION IN CABLE
ELA	ELEVATOR LEFT SIDE	MOVES ELEVATOR UP
ELB	ELEVATOR LEFT SIDE	MOVES ELEVATOR DOWN
ERA	ELEVATOR RIGHT SIDE	MOVES ELEVATOR UP
ERB	ELEVATOR RIGHT SIDE	MOVES ELEVATOR DOWN

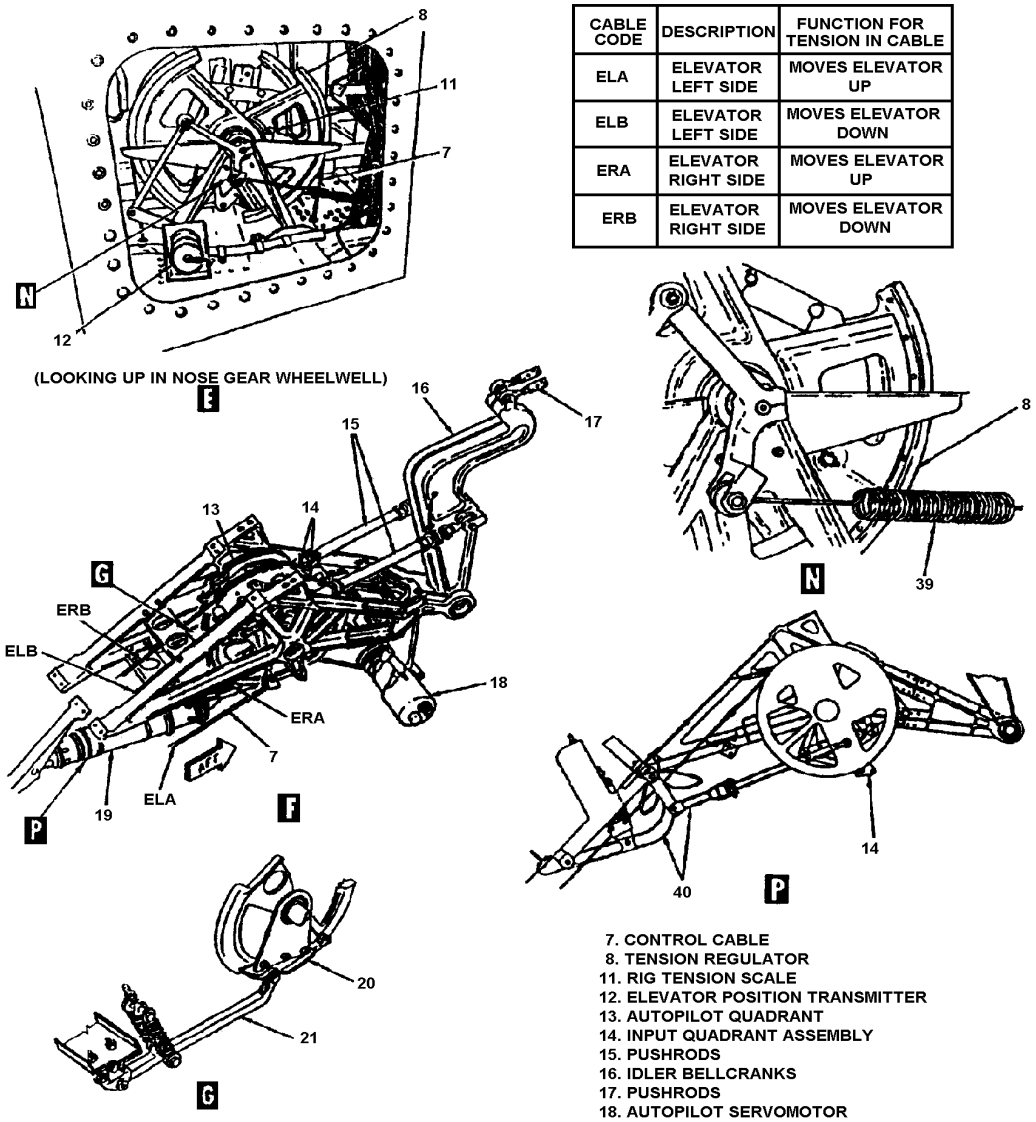

7. CONTROL CABLE
8. TENSION REGULATOR
11. RIG TENSION SCALE
12. ELEVATOR POSITION TRANSMITTER
13. AUTOPILOT QUADRANT
14. INPUT QUADRANT ASSEMBLY
15. PUSHRODS
16. IDLER BELLCRANKS
17. PUSHRODS
18. AUTOPILOT SERVOMOTOR
19. ARTIFICIAL FEEL SPRING CARTRIDGE
20. CENTERING CAM
21. CENTERLINE MECHANISM LEVER
39. BOBWEIGHT BALANCE SPRING
40. ARTIFICIAL FEEL ACTUATOR ASSEMBLY

Elevator Control System Component Locations (Sheet 2 of 4)

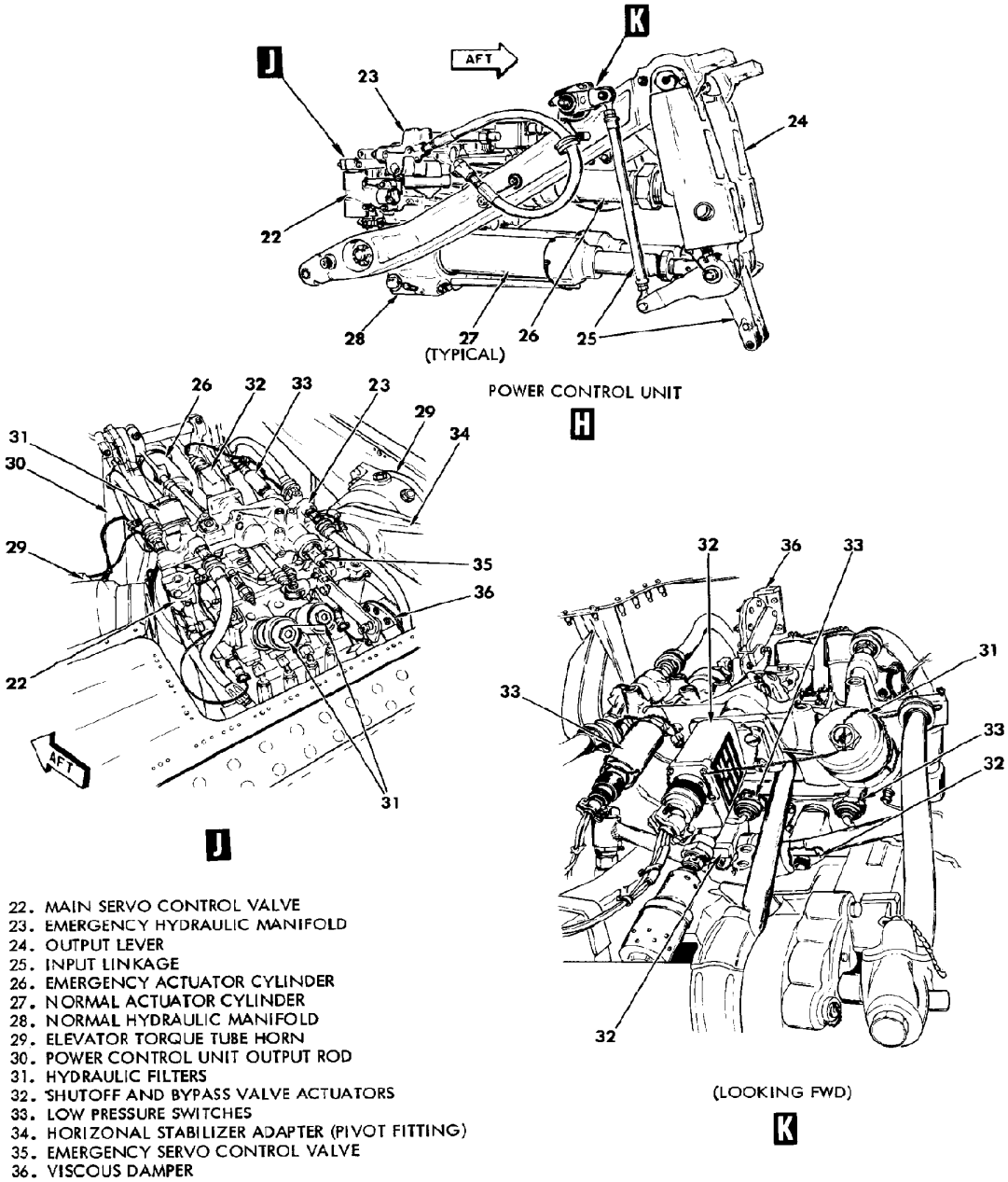

22. MAIN SERVO CONTROL VALVE
23. EMERGENCY HYDRAULIC MANIFOLD
24. OUTPUT LEVER
25. INPUT LINKAGE
26. EMERGENCY ACTUATOR CYLINDER
27. NORMAL ACTUATOR CYLINDER
28. NORMAL HYDRAULIC MANIFOLD
29. ELEVATOR TORQUE TUBE HORN
30. POWER CONTROL UNIT OUTPUT ROD
31. HYDRAULIC FILTERS
32. SHUTOFF AND BYPASS VALVE ACTUATORS
33. LOW PRESSURE SWITCHES
34. HORIZONAL STABILIZER ADAPTER (PIVOT FITTING)
35. EMERGENCY SERVO CONTROL VALVE
36. VISCOUS DAMPER

Elevator Control System Component Locations (Sheet 3 of 4)

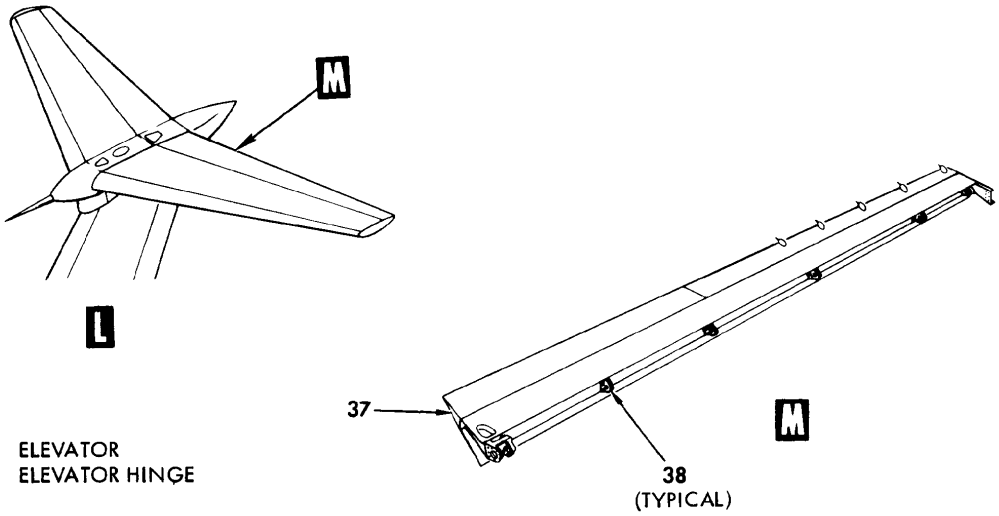

37. ELEVATOR
38. ELEVATOR HINGE

Elevator Control System Component Locations (Sheet 4 of 4)

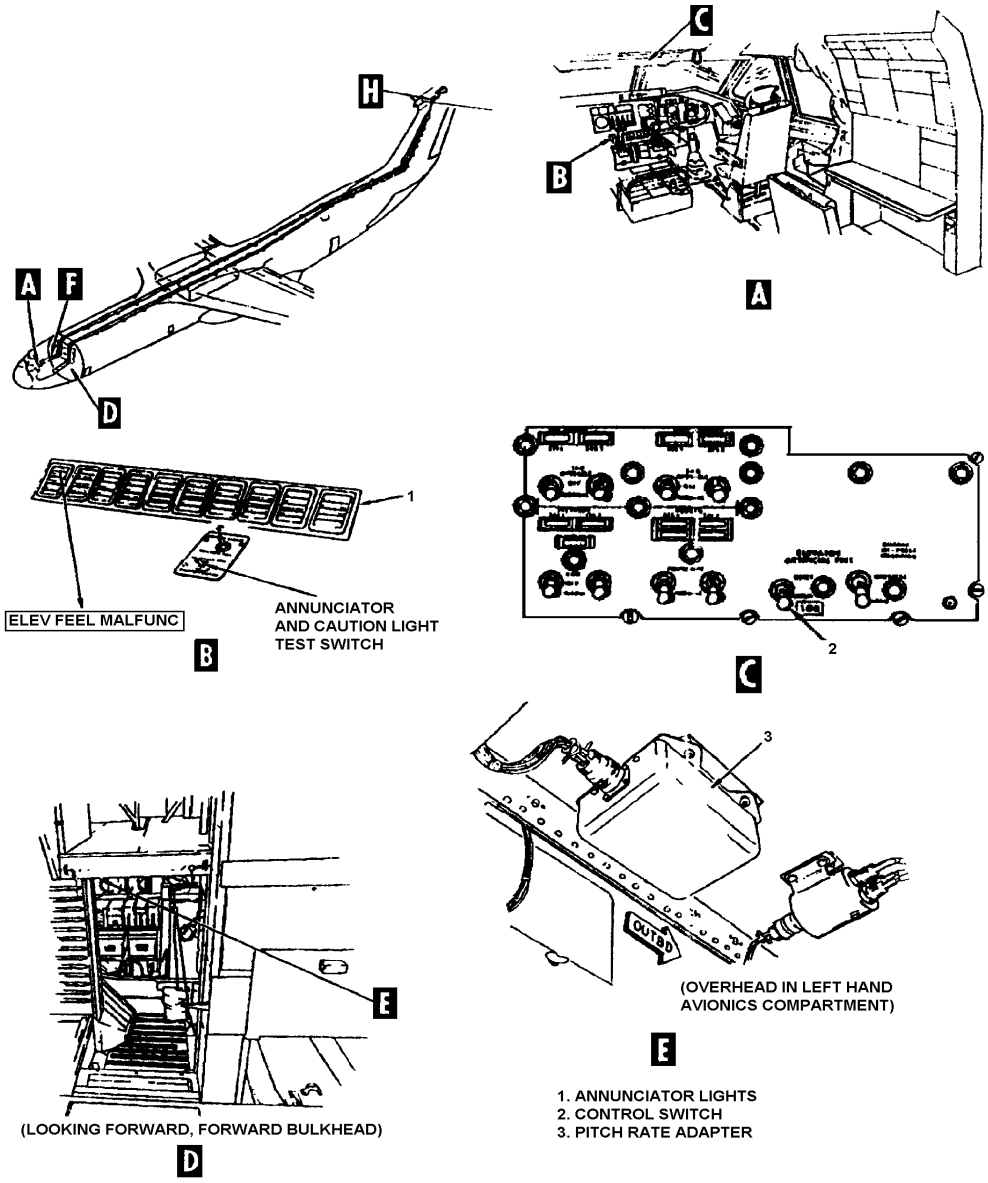

Elevator Artificial Feel System Component Locations (Sheet 1 of 5)

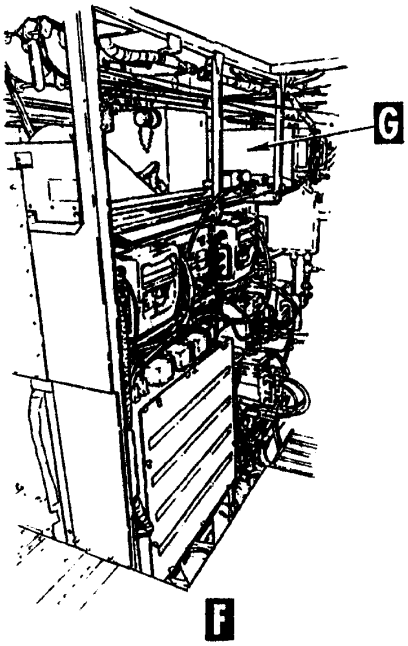

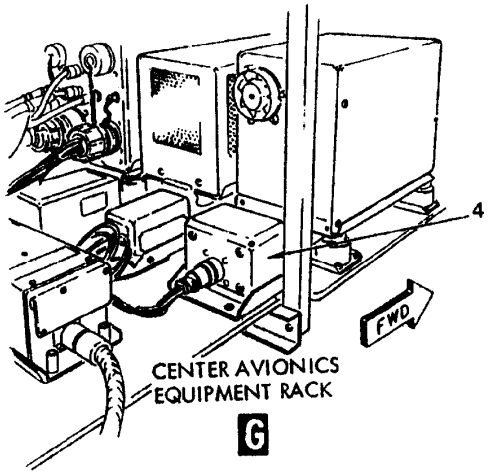

4. ARTIFICIAL FEEL COMPARATOR

Elevator Artificial Feel System Component Locations (Sheet 2 of 5)

NOTE

1. AIRPLANES NOT MODIFIED BY TO 1C-141-716
2. AIRPLANES MODIFIED BY TO 1C-141-716

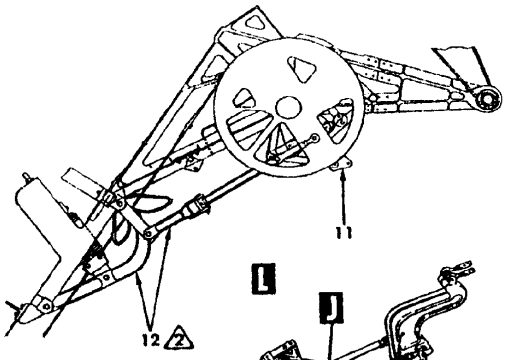

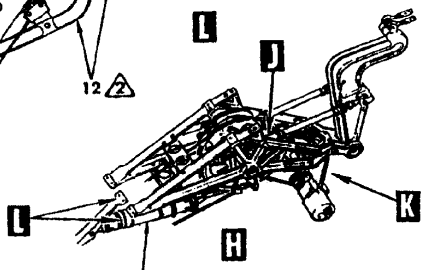

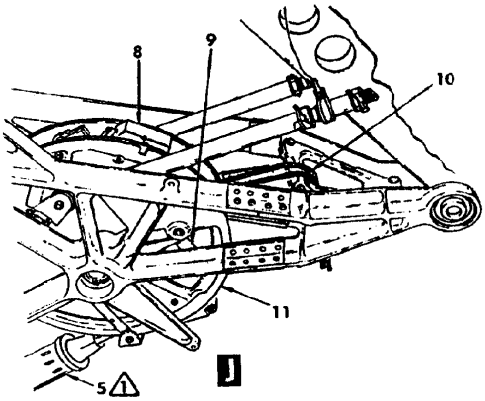

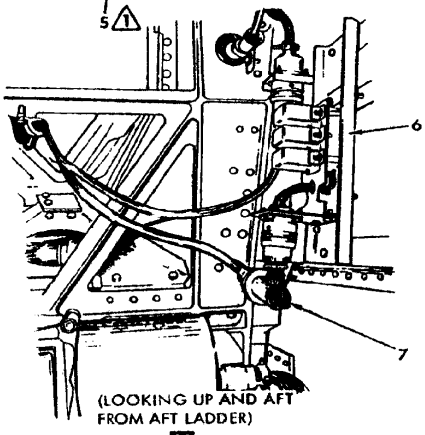

ARTIFICIAL FEEL SERVOMECHANISM LENGTHS AT LO-Q, MID-RANGE, AND MAX-Q POSITIONS			
AIRSPEED (KCAS)	221 OR LESS	309	393 OR MORE
SERVOMECHANISM POSITION	LO-Q (FULLY RETRACTED)	MID-RANGE	MAX-Q (FULLY EXTENDED)
LENGTH OF SERVOMECHANISM (CENTER TO CENTER, ATTACHING HARDWARE)	10.25 INCHES	APPROX 11.15 INCHES	12.5 INCHES

5. ARTIFICIAL FEEL SPRING CARTRIDGE 1
6. SERVOMECHANISM CONTROLLER
7. DECOUPLING CAPACITOR HARNESS
8. ARTIFICIAL FEEL SERVOMECHANISM
9. SERVOMECHANISM OUTPUT ARM
10. SERVOMECHANISM HARNESS
11. ELEVATOR INPUT QUADRANT ASSEMBLY
12. ARTIFICIAL FEEL ACTUATOR ASSEMBLY 2

Elevator Artificial Feel System Component Locations (Sheet 3 of 5)

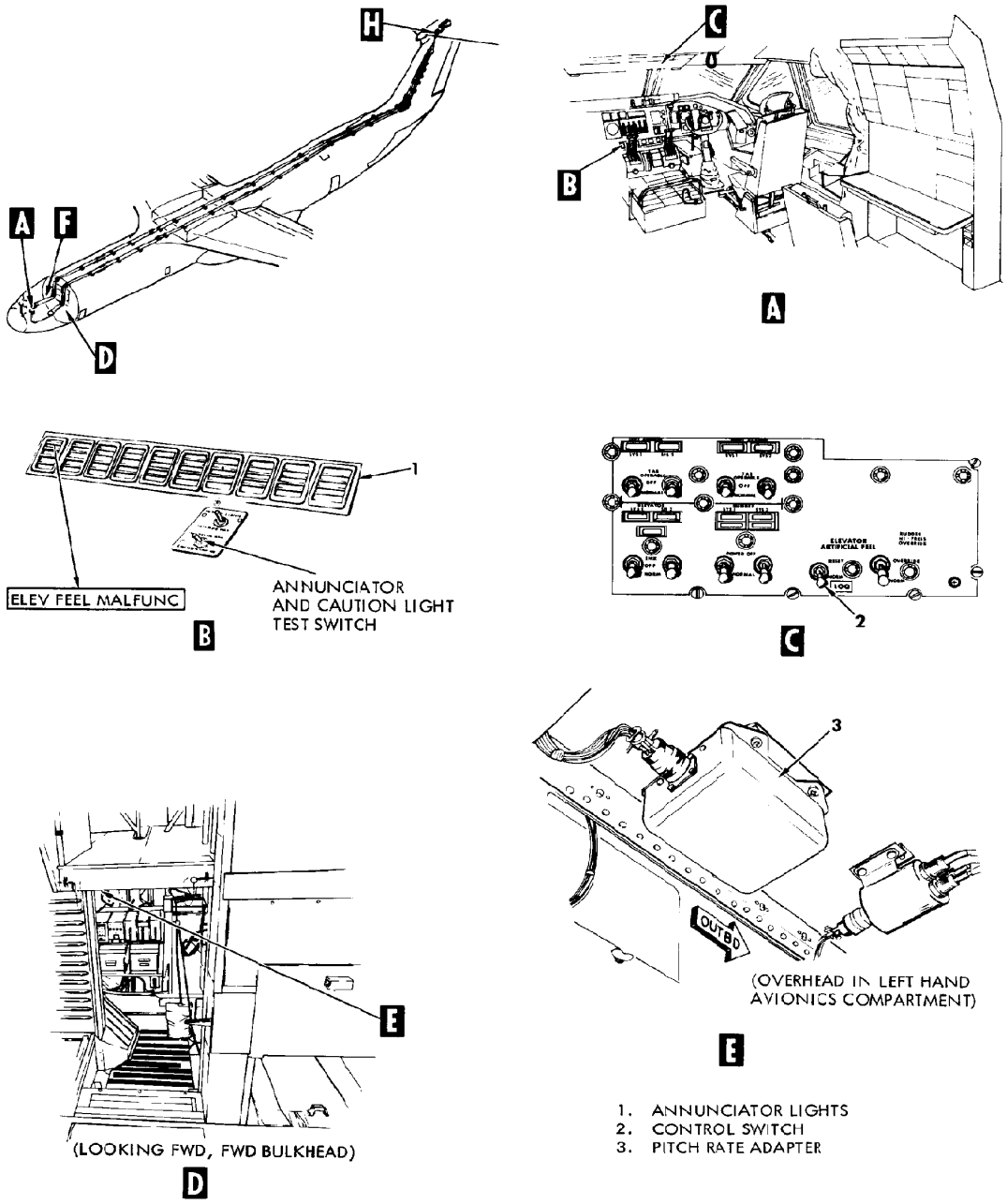

Elevator Artificial Feel System Component Locations (Sheet 4 of 5)

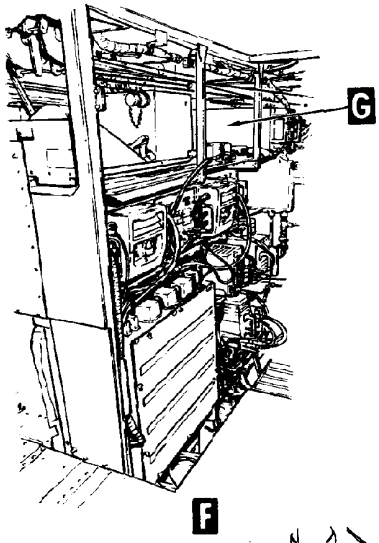

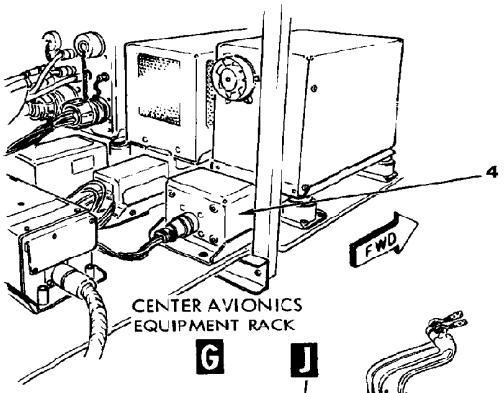

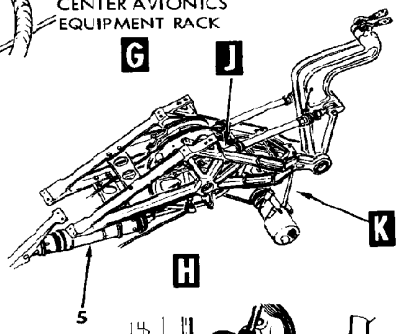

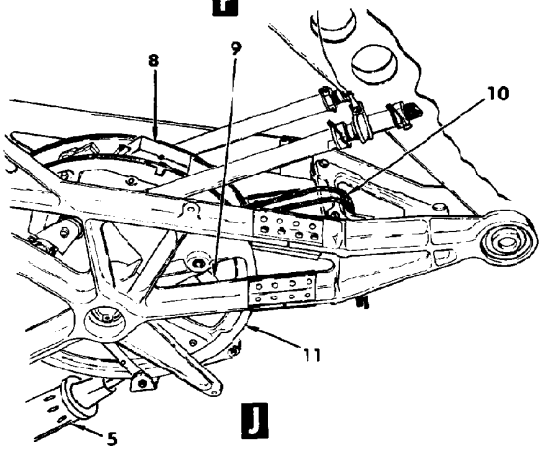

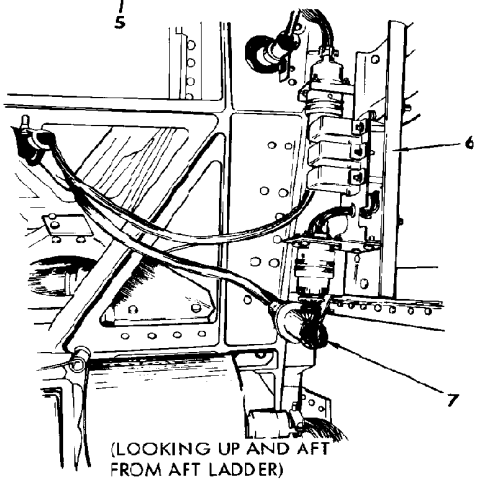

ARTIFICIAL FEEL SERVOMECHANISM LENGTHS AT LO-Q, MID-RANGE, AND MAX-Q POSITIONS			
AIRSPEED (KCAS)	221 OR LESS	309	393 OR MORE
SERVOMECHANISM POSITION	LO-Q (FULLY RETRACTED)	MID-RANGE	MAX-Q (FULLY EXTENDED)
LENGTH OF SERVOMECHANISM (CENTER TO CENTER, ATTACHING HARDWARE)	10.25 INCHES	APPROX 11.15 INCHES	12.5 INCHES

4. ARTIFICIAL FEEL COMPARATOR
5. ARTIFICIAL FEEL SPRING CARTRIDGE
6. SERVOMECHANISM CONTROLLER
7. DECOUPLING CAPACITOR HARNESS
8. ARTIFICIAL FEEL SERVOMECHANISM
9. SERVOMECHANISM OUTPUT ARM
10. SERVOMECHANISM HARNESS
11. ELEVATOR INPUT QUADRANT ASSEMBLY

Elevator Artificial Feel System Component Locations (Sheet 5 of 5)

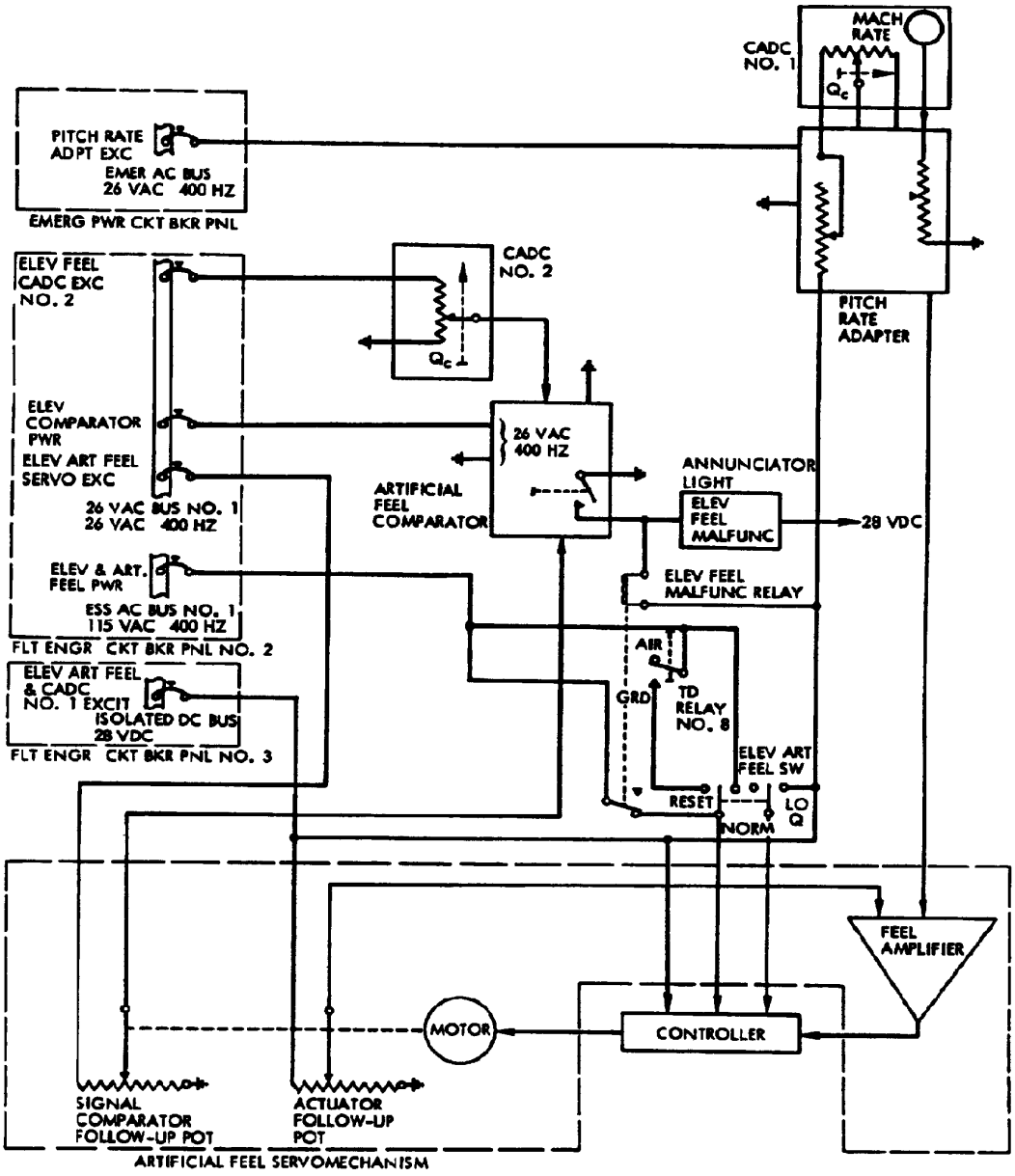

Elevator Artificial Feel System Schematic Diagram

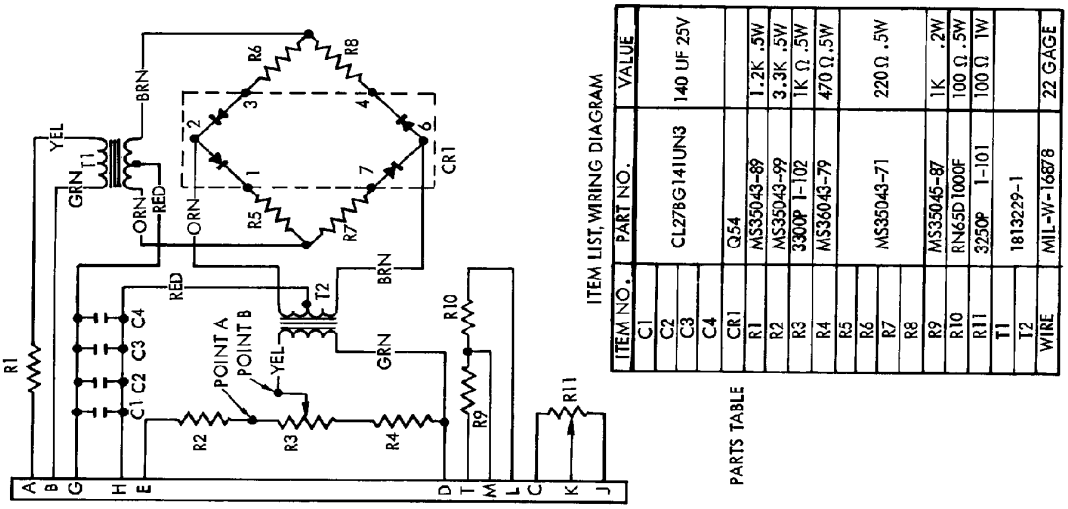

ITEM LIST, WIRING DIAGRAM

PARTS TABLE

ITEM NO.	PART NO.	VALUE
C1	CL27BG141UN3	140 UF 25V
C2		
C3		
C4		
CR1	Q54	
R1	MS35043-89	1.2K .5W
R2	MS35043-99	3.3K .5W
R3	3300P 1-102	1K Ω .5W
R4	MS36043-79	470 Ω .5W
R5		
R6	MS35043-71	220 Ω .5W
R7		
R8		
R9	MS35045-87	1K .2W
R10	RN65D1000F	100 Ω .5W
R11	3250P 1-101	100 Ω 1W
T1	1813229-1	
T2		
WIRE	MIL-W-16878	22 GAGE

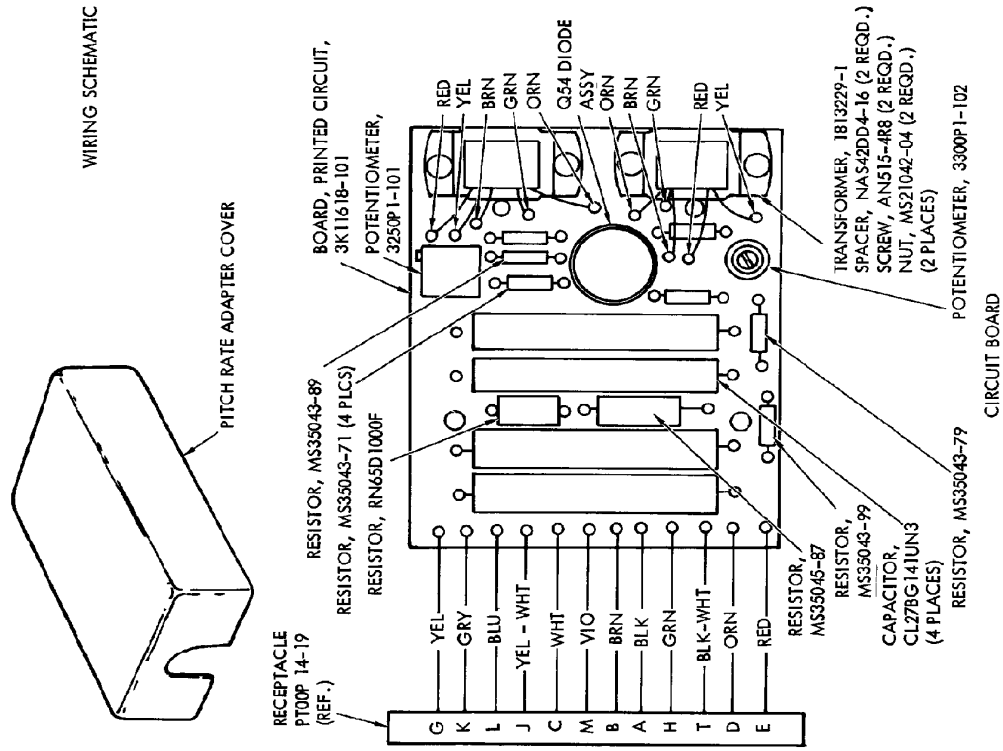

Pitch Rate Adapter Component Locations and Schematic Diagram

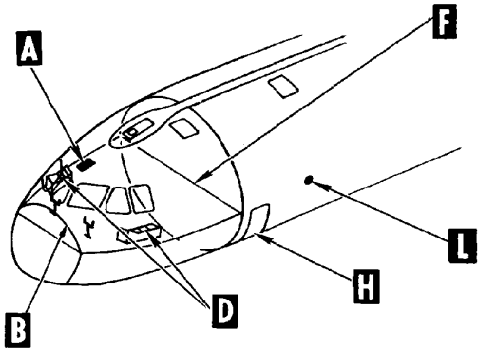

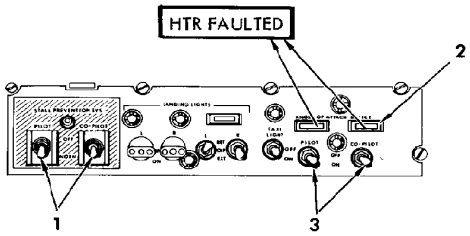

A

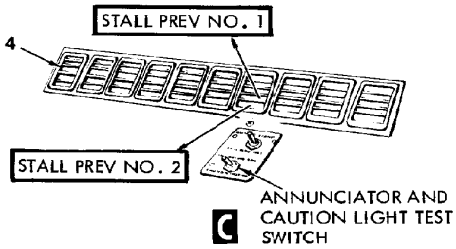

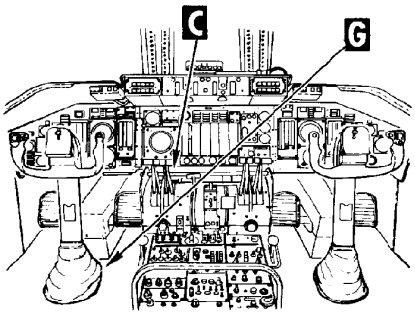

B

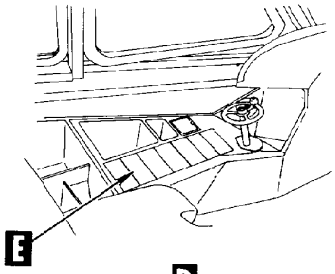

D

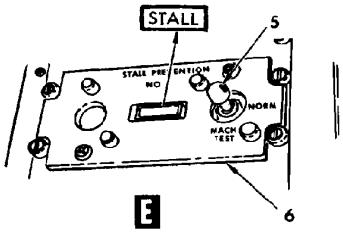

E

(PILOT'S PANEL SHOWN,
COPILOT'S SIMILAR)

1. SYSTEM (SHAKER EMERGENCY SHUTOFF) SWITCHES
2. ANGLE OF ATTACK VANE HEATER WARNING LIGHTS
3. ANGLE OF ATTACK VANE HEATER CONTROL SWITCHES
4. ANNUNCIATOR LIGHTS
5. GROUND TEST SWITCH
6. STALL PREVENTION CONTROL PANEL

Stall Prevention System Component Locations (Sheet 1 of 2)

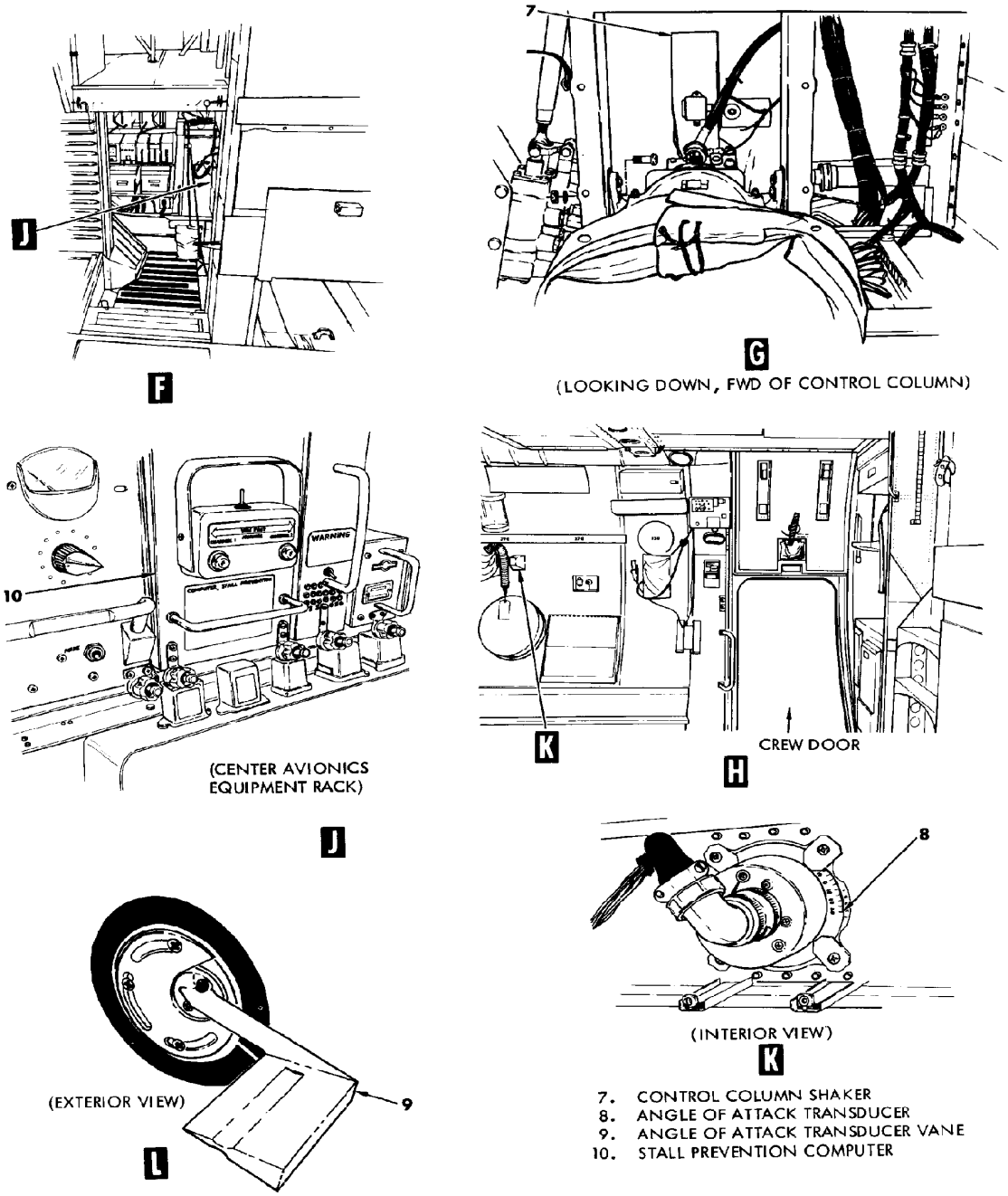

Stall Prevention System Component Locations (Sheet 2 of 2)

Pitch Trim Subsystem

Pitch attitude of the airplane is controlled by the two elevators. Trim about the pitch axis is controlled by the horizontal stabilizer. Trimming the airplane pitch relieves the pilots of elevator control column loads that would normally result from varying flight conditions and varying airplane load centers of gravity. Horizontal stabilizer travel is limited to approximately 4 degrees leading edge up and 9.6 degrees leading edge down. Movement of the horizontal stabilizer is controlled by the pitch trim actuator. The pitch trim actuator can be controlled three ways, depending on the selected driving system. The pitch trim subsystem essentially consists of the electro-hydraulic pitch trim system, the manual hydraulic pitch trim system, the electric pitch trim system, and the horizontal stabilizer position indication system.

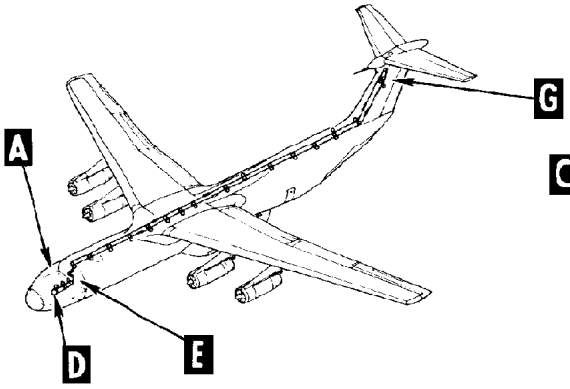

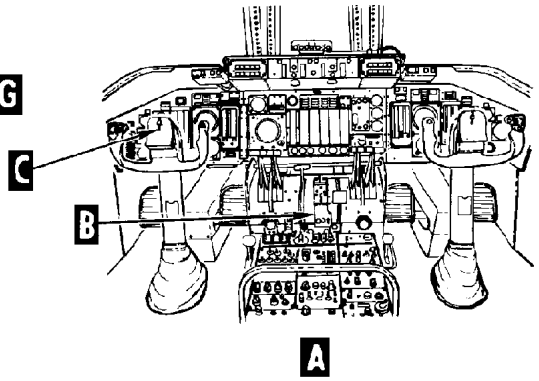

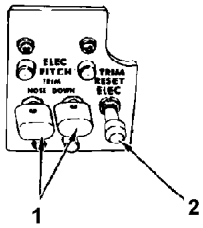

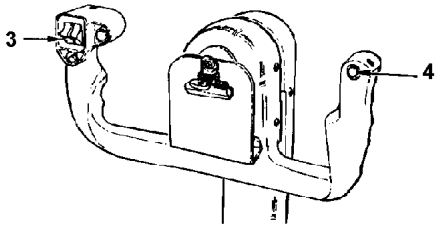

(PILOT'S WHEEL SHOWN,
COPILOT'S WHEEL OPPOSITE)

1. ELECTRIC PITCH TRIM CONTROL SWITCHES
2. TRIM REST SWITCH
3. ELECTRO-HYDRAULIC PITCH TRIM CONTROL SWITCH
4. TRIM DISC SWITCH
5. TORQUE TUBE
6. MANUAL HYDRAULIC PITCH TRIM SYSTEM CONTROL SWITCH
7. HYDRAULIC PITCH TRIM LEVER
8. CONTROL SWITCHES
9. CENTERING SPRING CARTRIDGE
10. FORWARD QUADRANT
11. CENTERING SPRING LEVER

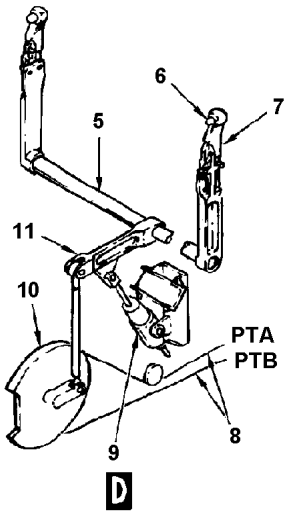

CABLE CODE	DESCRIPTION	FUNCTION FOR TENSION IN CABLE
PTA	PITCH TRIM	AIRPLANE NOSE UP
PTB	PITCH TRIM	AIRPLANE NOSE DOWN

Pitch Trim Control Systems Component Locations (Sheet 1 of 3)

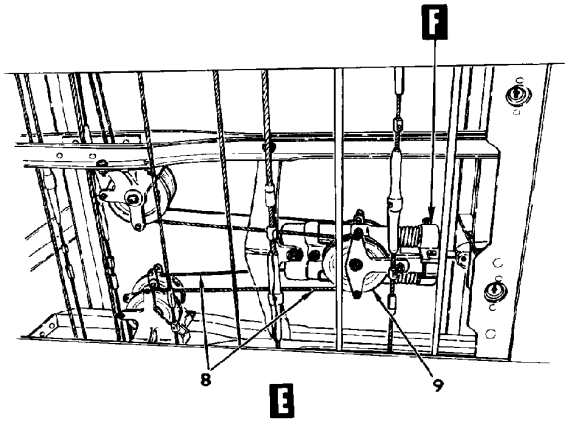

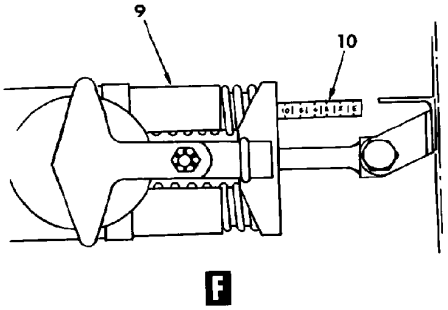

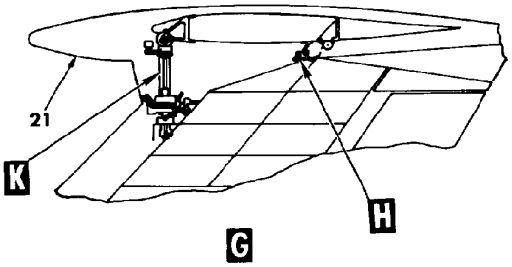

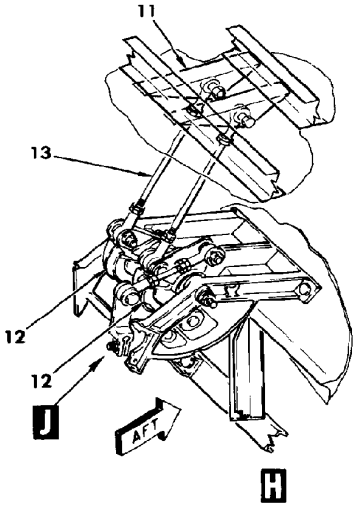

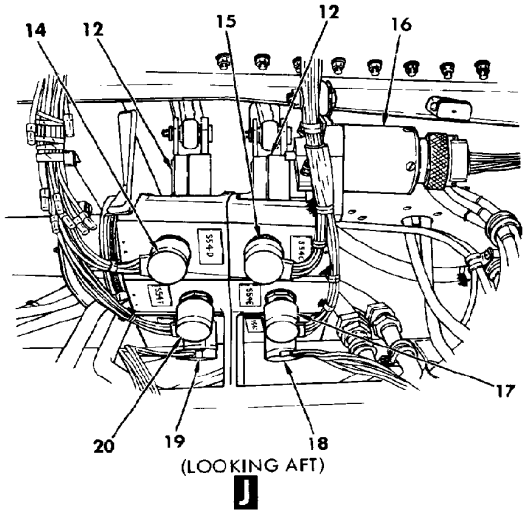

8. CONTROL CABLES
9. TENSION REGULATOR
10. RIG TENSION SCALE
11. HORIZONTAL STABILIZER ATTACH BRACKETS
12. LIMIT SWITCH CAMS
13. LIMIT SWITCH CAM ACTUATING RODS
14. STAB 4-DEGREE L.E. UP LIMIT SWITCH (ELEC-HYDR AND MAN HYDR)
15. STAB 4-DEGREE L.E. UP LIMIT SWITCH (ELEC)
16. POSITION TRANSMITTER (REF)
17. STAB 8-DEGREE L.E. DOWN LIMIT SWITCH (ELEC)
18. STAB 9.6-DEGREE L.E. DOWN LIMIT SWITCH (ELEC, C-141B ONLY)
19. STAB 9.6-DEGREE L.E. DOWN LIMIT SWITCH (ELEC-HYDR AND MAN HYDR, C-141B ONLY)
20. STAB 8-DEGREE L.E. DOWN LIMIT SWITCH (ELEC-HYDR AND MAN HYDR)
21. HORIZONTAL STABILIZER

Pitch Trim Control Systems Component Locations (Sheet 2 of 3)

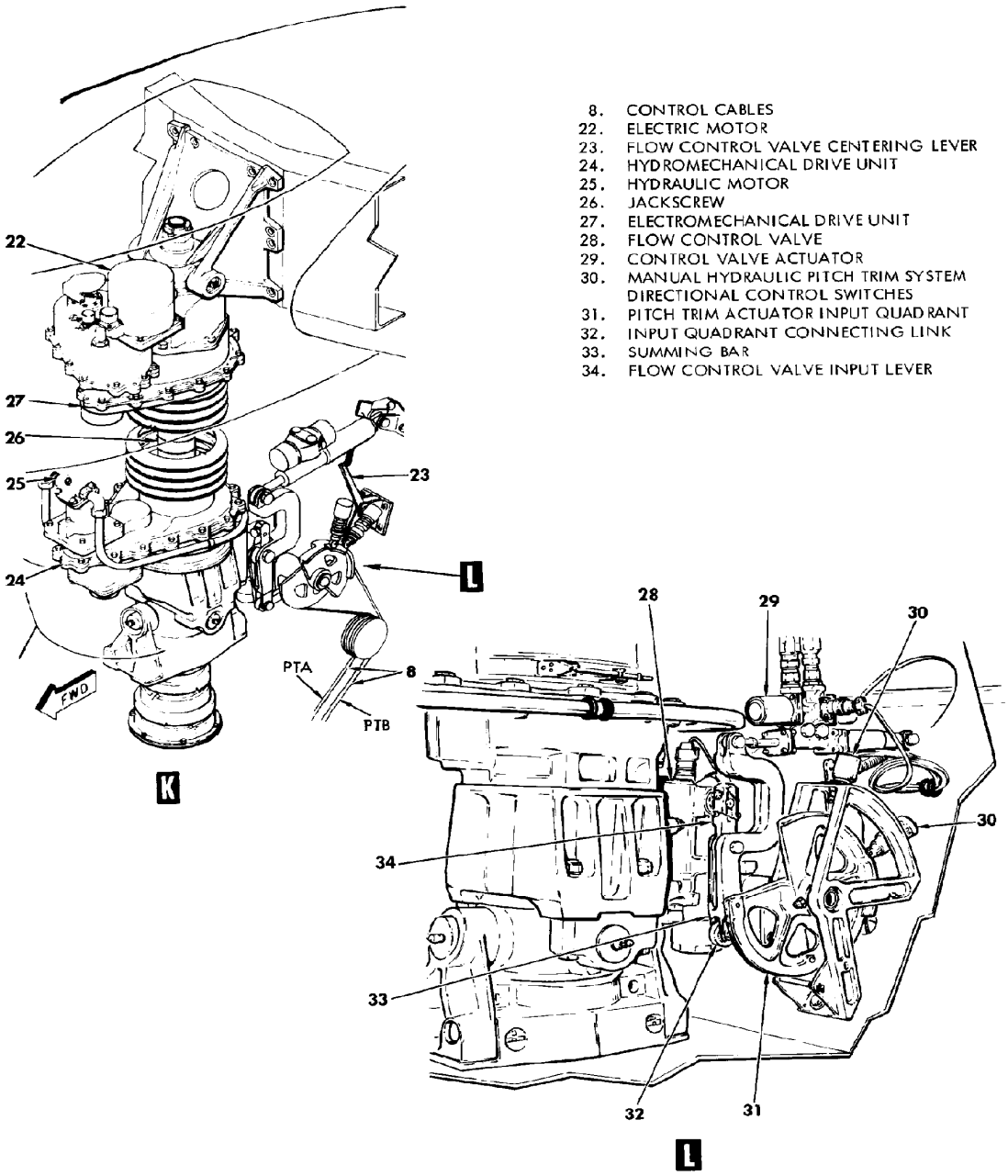

Pitch Trim Control Systems Component Locations (Sheet 3 of 3)

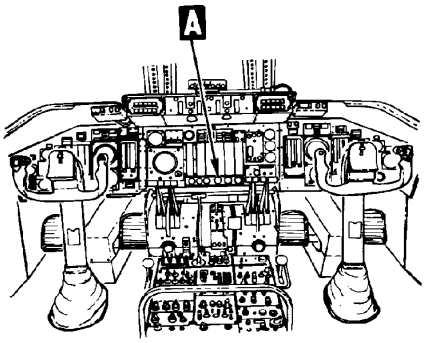

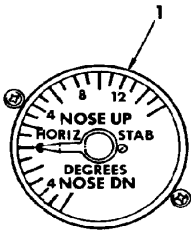

A

1. POSITION INDICATOR
2. OUTPUT SHAFT (CALIBRATION NULL POINT)
3. POSITION TRANSMITTER
4. TRANSMITTER POSITIONING ARM

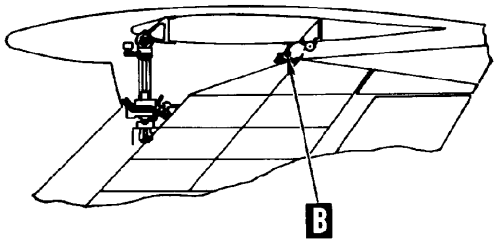

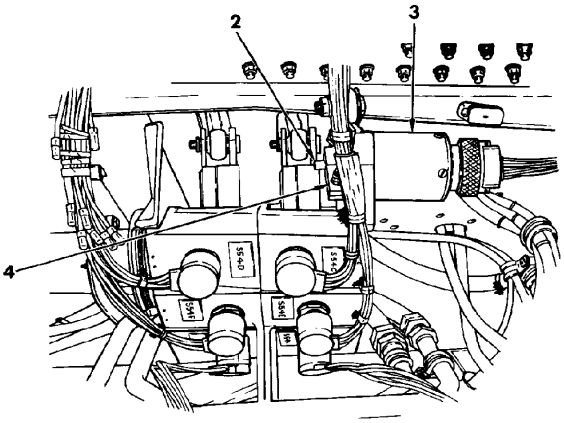

(LOOKING AFT)

B

Horizontal Stabilizer Position Indication System Component Locations

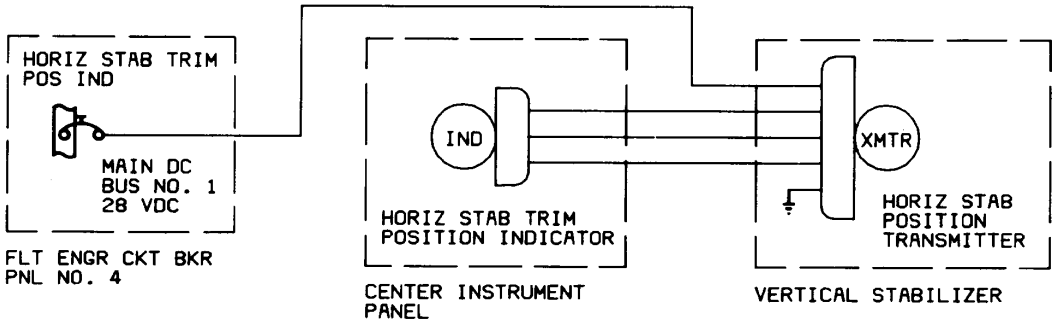

Horizontal Stabilizer Position Indication System Schematic Diagram

Flaps Subsystem

Wing flaps change the relatively low-lift wing needed for high speed flight to a high-lift wing needed for slow landing and takeoff speeds. This is done by changing the camber and area of the wing as the flaps extend. Movement of the four flaps is controlled by the flap control handle. Several flap control handle detents are provided for specific flap extension positions depending upon flight profile. The flaps subsystem consists of the flap drive system, the flap asymmetry system, and the flap position indication system. Four double-slotted, Fowler-type flaps are located along the trailing edges of the wings. Two flaps are used per side. The flaps run from the wing root to the aileron. Extending the flaps changes the camber and area of the wing into a high-lift configuration. Takeoff, approach, and landing speeds can then be reduced. The flaps are mounted on carriages which roll on curved tracks. The tracks extend aft from the trailing edge of the wing structure. Jackscrew actuators extend and retract the flaps. Two hydraulic motors are mounted on a gearbox attached to the center wing rear beam. The gearbox is normally powered by the No. 2 and No. 3 hydraulic systems and drives the jackscrews by means of torque tubes. Flap movement is controlled by the flap control handle located on the center console. Control cables transmit flap control handle movement to an input quadrant adjacent to the gearbox. The flaps and the spoilers should not be deployed at the same time in flight. A high-force detent on the flap control handle adds about 50 pounds to the pulling force should the spoilers be open (during flight). A position transmitter mounted on the gearbox supplies signals to a position indicator located on the center instrument panel.

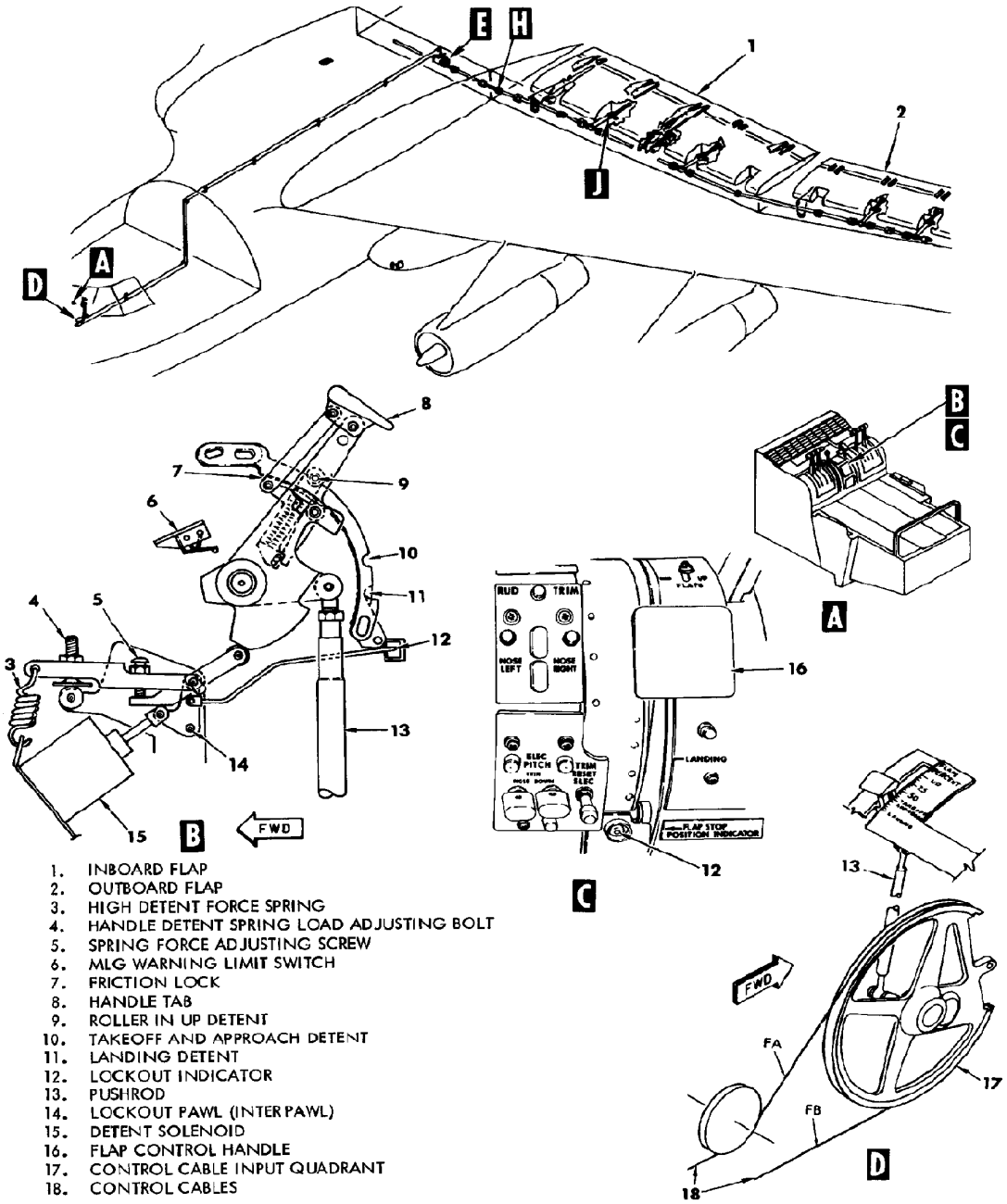

1. INBOARD FLAP
2. OUTBOARD FLAP
3. HIGH DETENT FORCE SPRING
4. HANDLE DETENT SPRING LOAD ADJUSTING BOLT
5. SPRING FORCE ADJUSTING SCREW
6. MLG WARNING LIMIT SWITCH
7. FRICTION LOCK
8. HANDLE TAB
9. ROLLER IN UP DETENT
10. TAKEOFF AND APPROACH DETENT
11. LANDING DETENT
12. LOCKOUT INDICATOR
13. PUSHROD
14. LOCKOUT PAWL (INTERPAWL)
15. DETENT SOLENOID
16. FLAP CONTROL HANDLE
17. CONTROL CABLE INPUT QUADRANT
18. CONTROL CABLES

Flap Drive System Component Locations (Sheet 1 of 3)

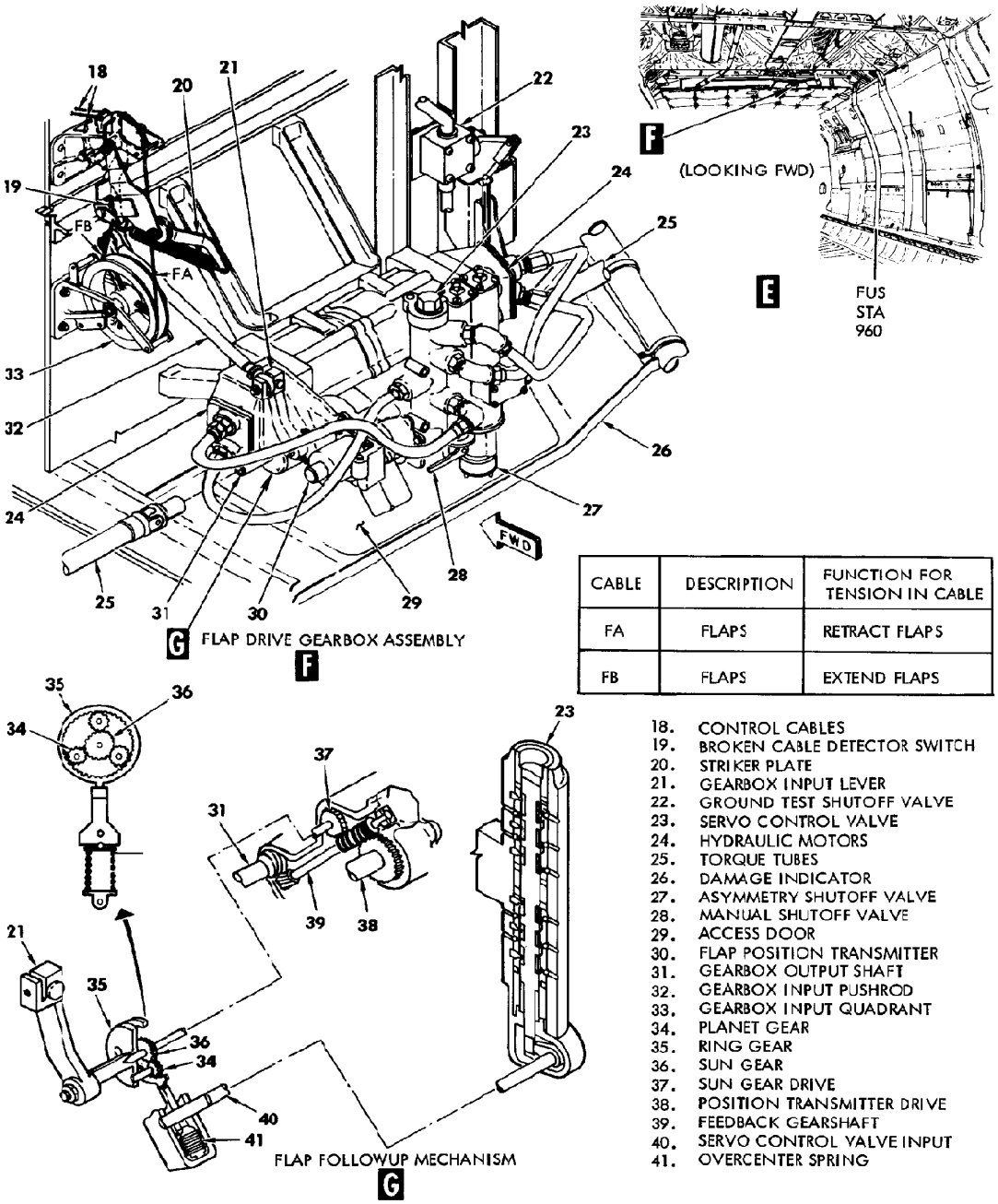

CABLE	DESCRIPTION	FUNCTION FOR TENSION IN CABLE
FA	FLAPS	RETRACT FLAPS
FB	FLAPS	EXTEND FLAPS

18. CONTROL CABLES
19. BROKEN CABLE DETECTOR SWITCH
20. STRIKER PLATE
21. GEARBOX INPUT LEVER
22. GROUND TEST SHUTOFF VALVE
23. SERVO CONTROL VALVE
24. HYDRAULIC MOTORS
25. TORQUE TUBES
26. DAMAGE INDICATOR
27. ASYMMETRY SHUTOFF VALVE
28. MANUAL SHUTOFF VALVE
29. ACCESS DOOR
30. FLAP POSITION TRANSMITTER
31. GEARBOX OUTPUT SHAFT
32. GEARBOX INPUT PUSHROD
33. GEARBOX INPUT QUADRANT
34. PLANET GEAR
35. RING GEAR
36. SUN GEAR
37. SUN GEAR DRIVE
38. POSITION TRANSMITTER DRIVE
39. FEEDBACK GEARSHAFT
40. SERVO CONTROL VALVE INPUT
41. OVERCENTER SPRING

Flap Drive System Component Locations (Sheet 2 of 3)

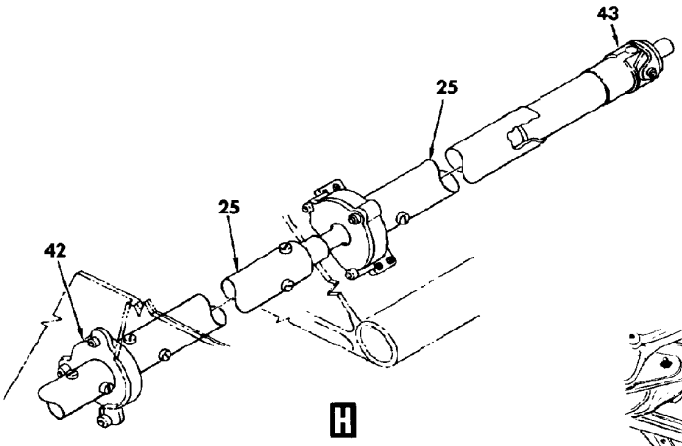

25. TORQUE TUBES
42. BEARING ASSEMBLY
43. UNIVERSAL JOINT
44. ACTUATOR AND CARRIAGE ASSEMBLIES
45. INPUT DRIVESHAFT
46. BALL NUT, WIPER, AND SCREW ASSEMBLY
47. BALL NUT
48. INNER SCREW
49. DRIVE ROD

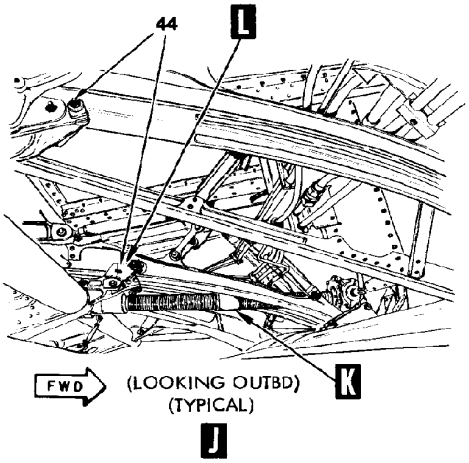

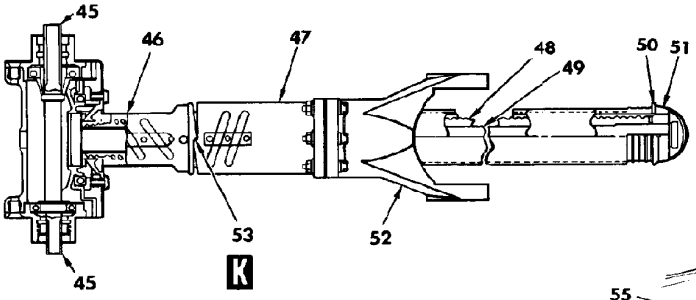

50. MECHANICAL STOP (EXTEND)
51. DRIVE SPLINE
52. YOKE
53. MECHANICAL STOP (UP)
54. INBOARD AND OUTBOARD ROLLERS
55. LOWER ROLLER
56. FORWARD AND AFT ROLLERS

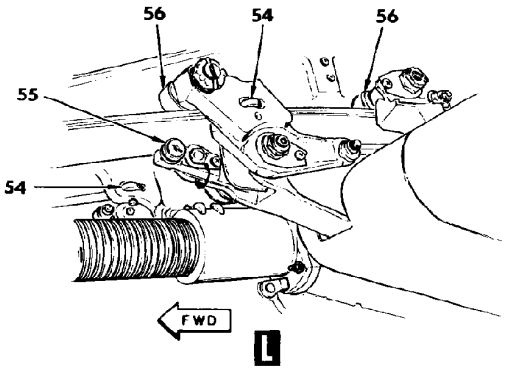

Flap Drive System Component Locations (Sheet 3 of 3)

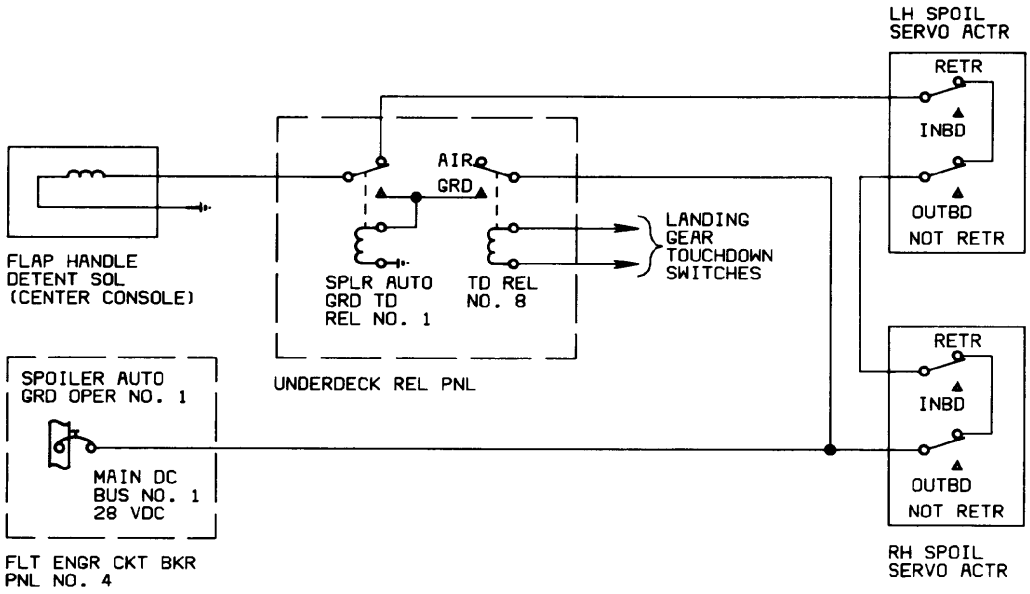

Flap Handle Detent Schematic Diagram

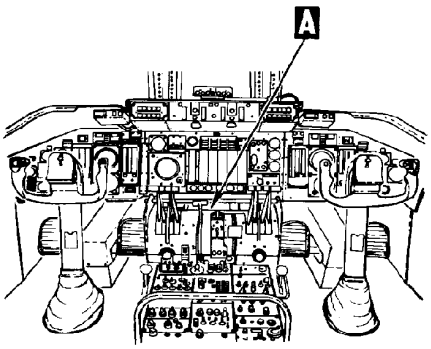

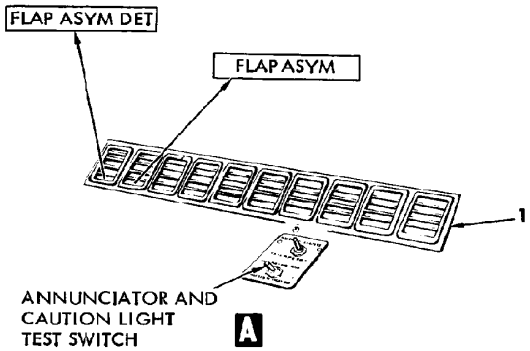

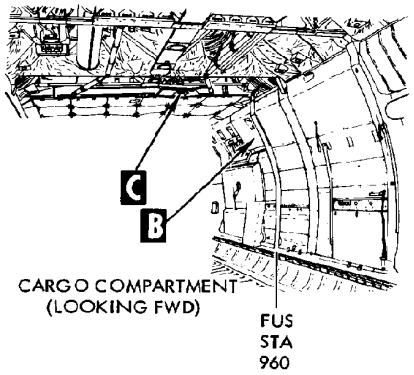

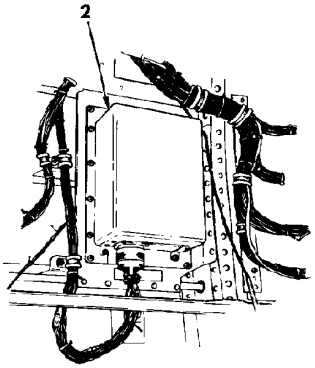

1. ANNUNCIATOR LIGHTS
2. ASYMMETRY COMPUTER/AMPLIFIER
3. ASYMMETRY SHUTOFF VALVE
4. RESET KNOB
5. TRIP PIN

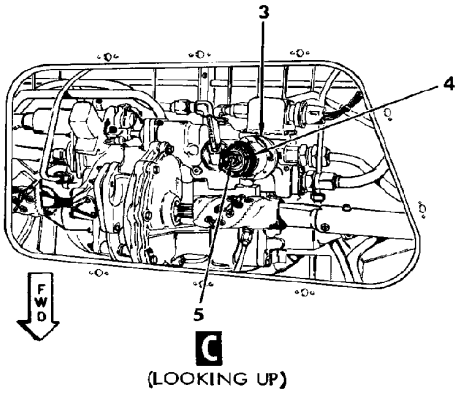

Flap Asymmetry System Component Locations (Sheet 1 of 3)

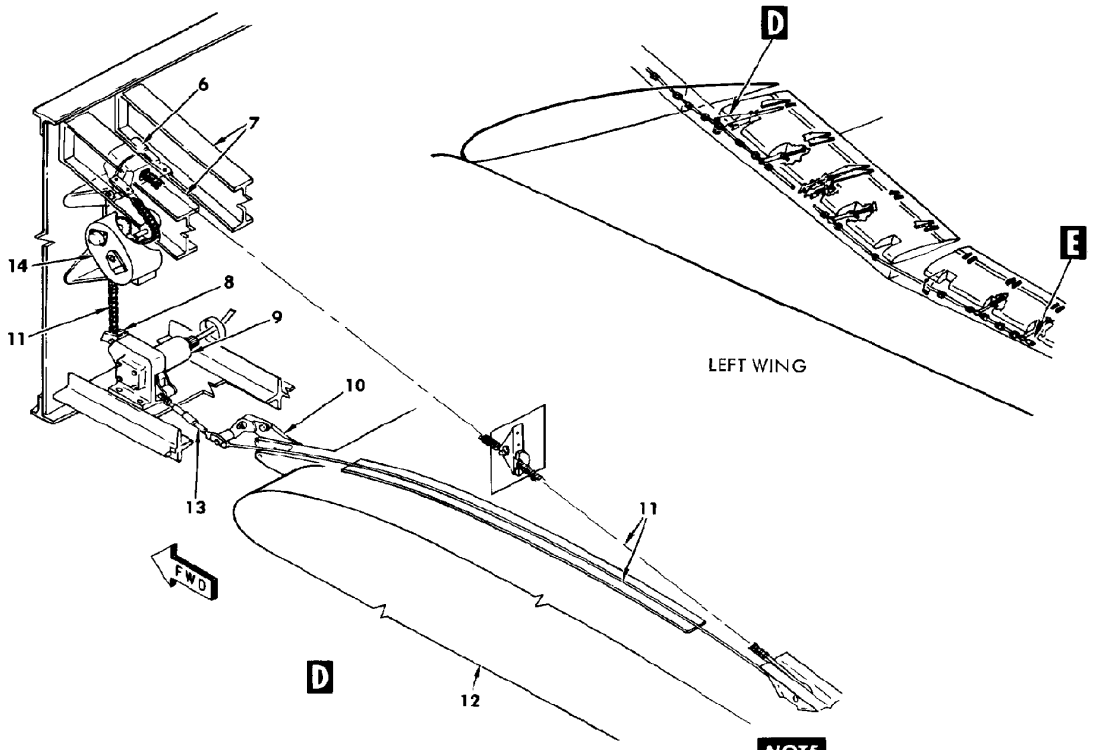

NOTE

LEFT INBOARD FLAP ASYMMETRY DETECTOR DRIVE SHOWN. OTHER FLAP POSITION TRANSMITTER DRIVES ARE SIMILAR BUT DO NOT HAVE A POSITION LIMIT SWITCH.

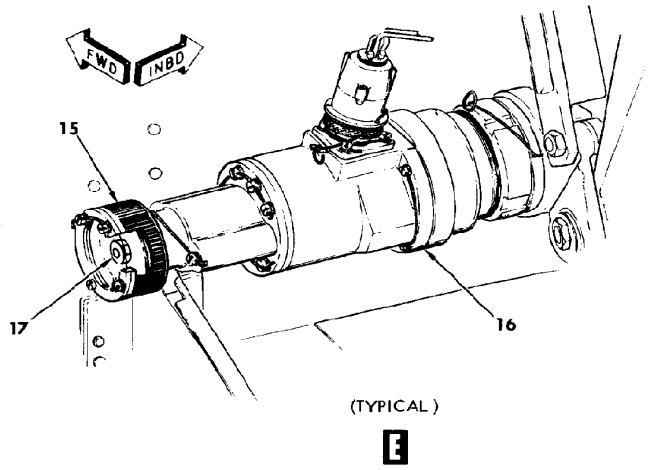

6. CHAIN AND CABLE TENSION REGULATOR
7. FLAP TRACKS
8 DRIVE SPROCKET
9. FLAP POSITION TRANSMITTER
10. FLAP CARRIAGE ATTACH BRACKET
11. CHAIN AND CABLE ASSEMBLY
12. FLAP
13. TURNBUCKLE
14. FLAP POSITION LIMIT SWITCH
15. RESET KNOB
16. ASYMMETRY BRAKE
17. TRIP PIN

Flap Asymmetry System Component Locations (Sheet 2 of 3)

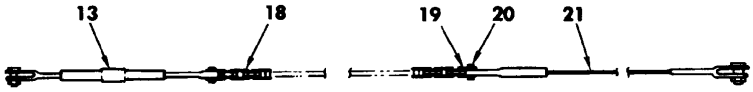

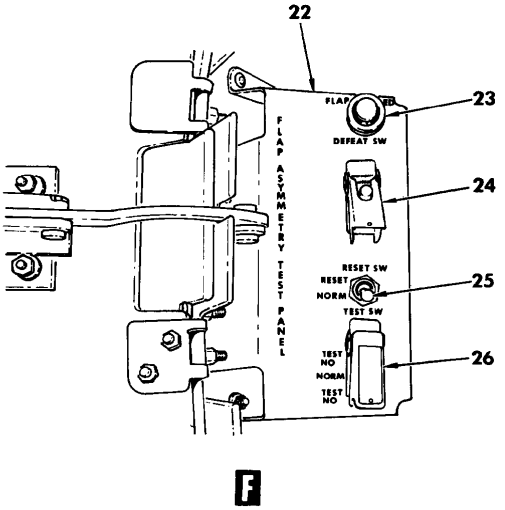

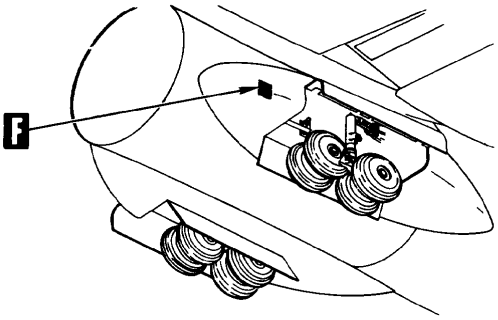

13. TURNBUCKLE
18. CHAIN
19. MASTER LINK
20. RIVET
21. CABLE
22. ASYMMETRY TEST PANEL
23. DEFEAT LIGHT
24. DEFEAT SWITCH
25. RESET SWITCH
26. TEST SWITCH

Flap Asymmetry System Component Locations (Sheet 3 of 3)

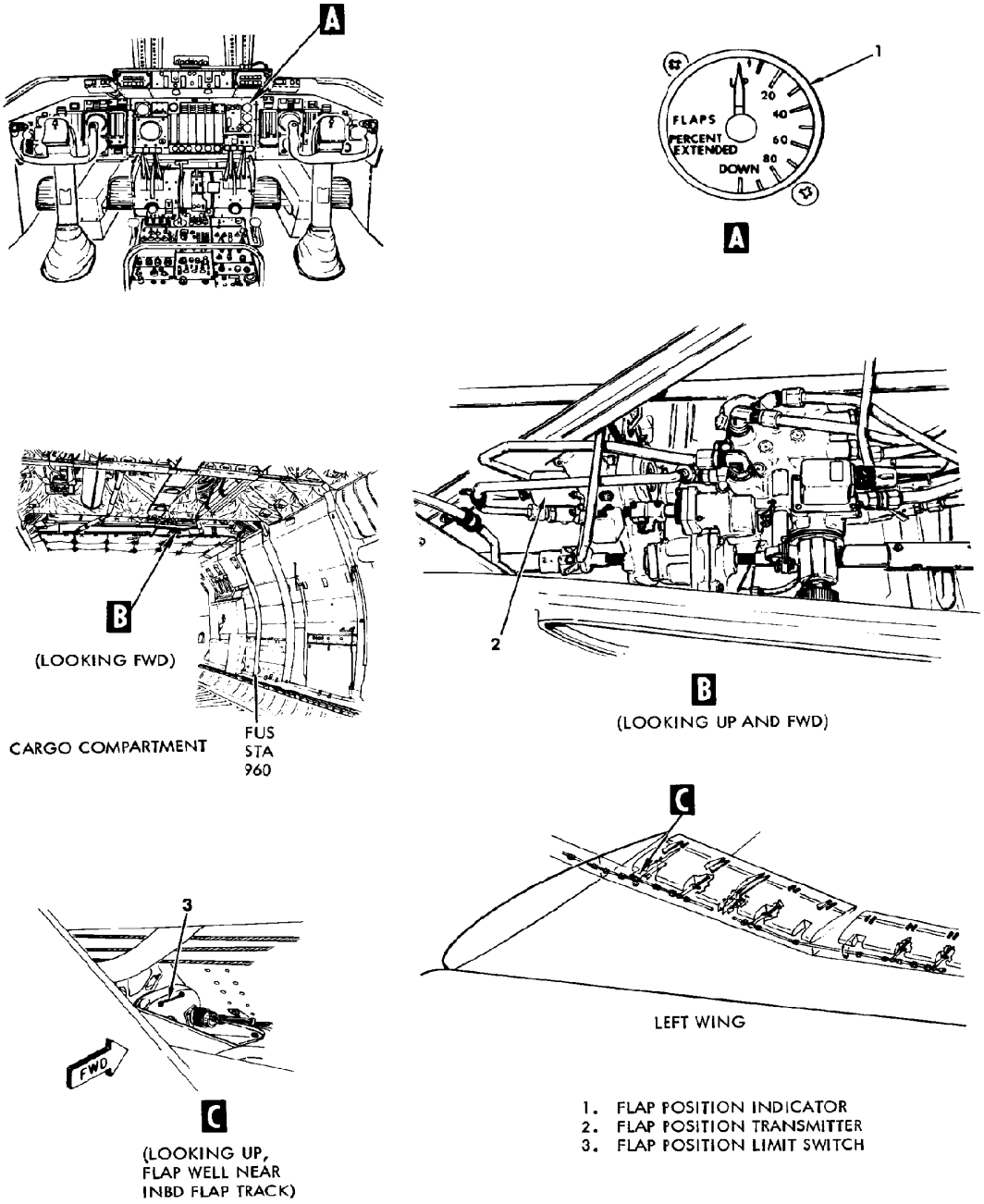

Flap Position Indication System Component Locations

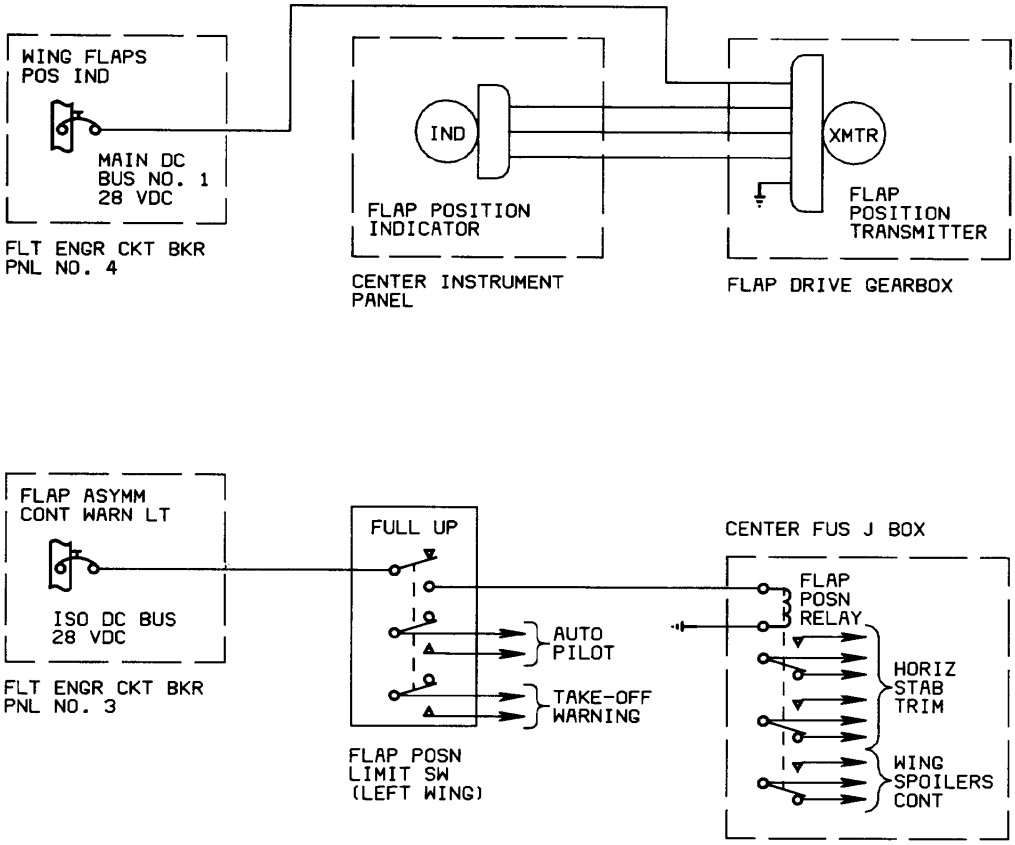

Flap Position Indication System Schematic Diagram

Spoilers Subsystem

A total of 36 lift-spoiling panels are installed on the upper and lower surfaces of the airplane wings. While in flight, the spoilers are used as a speed brake to reduce speed for a high rate of descent. The spoilers may also be used to simply slow the airplane down. On the ground, the spoilers help shorten airplane roll following landing by increasing the drag and decreasing the lift of the wing. Five spoilers are on each of the upper and lower surfaces of the inner wing. Four spoilers are on each of the upper and lower surfaces of the outer wing. Spoiler operation is controlled with the spoiler control handle on the center console. The amount of spoiler deflection is different depending on whether the airplane is in flight or on the ground. During flight, the trailing edges of the upper surface spoilers deflect 27 degrees. The lower spoilers deflect 59 degrees. On the ground, the trailing edges of the upper surface spoilers deflect 91 degrees. The lower spoilers deflect 86 degrees. The inflight spoiler travel is limited by a cam. It restricts control handle movement when the airplane is airborne. The spoilers subsystem consists of the spoiler input system, the spoiler output system, the spoiler asymmetry system, the spoiler emergency retract system, and the spoilers position indication system. Each spoiler panel is hinged at its leading edge to the wing. An actuator in each wing controls all spoiler panels on that wing by a combination of pushrods, quadrants, and cables. The actuators are normally powered by the No. 2 and No. 3 hydraulic systems. Spoiler movement is normally controlled by the spoiler control handle located on the center console, a cable servo actuator below the control handle, and control cables running to a center drive quadrant, then to the actuators. The center drive quadrant is attached to the center wing rear beam. Two position transmitters (one in each wing root) supply signals to a position indicator located on the center instrument panel.

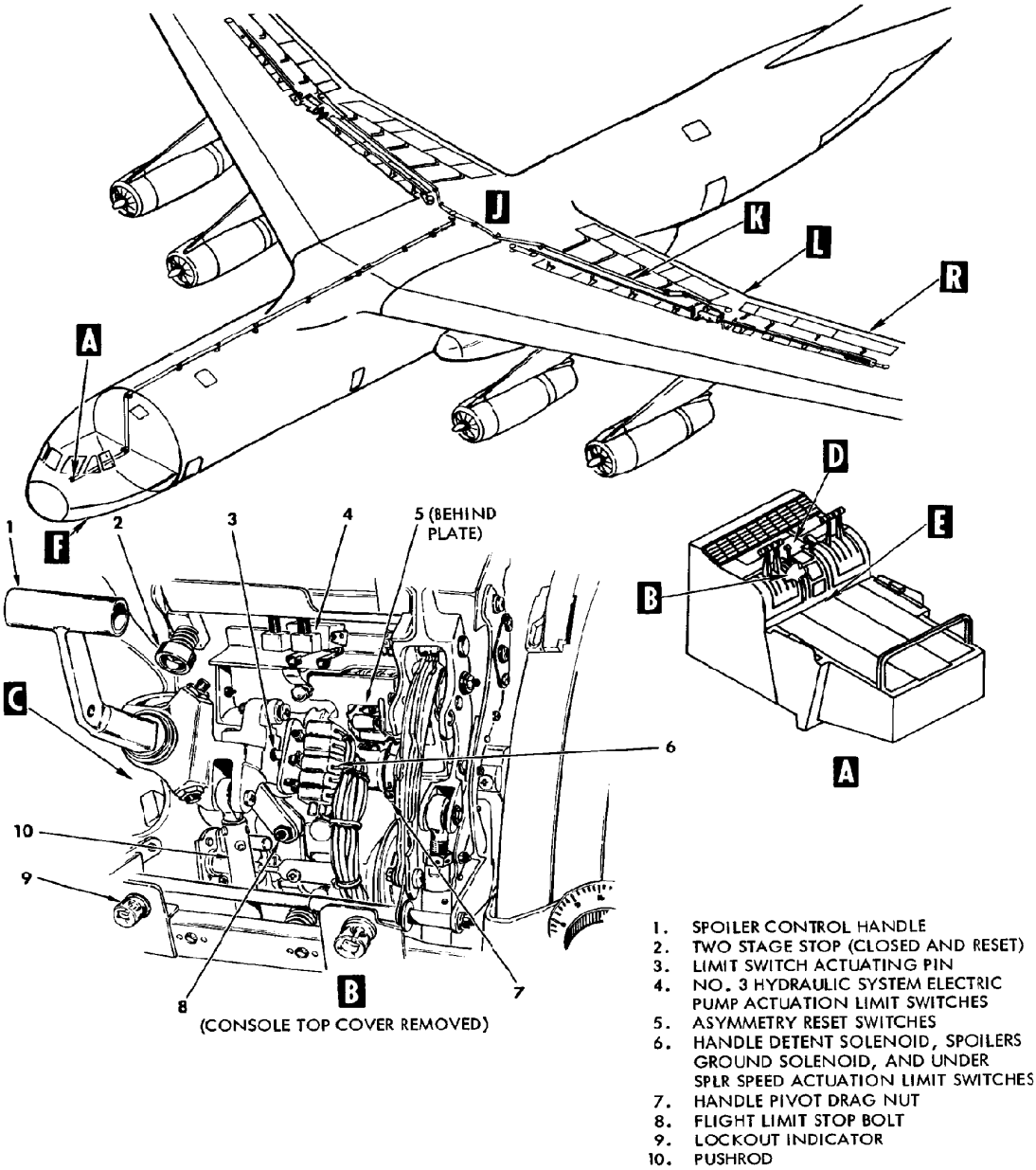

Spoiler Input and Output Systems Component Locations (Sheet 1 of 5)

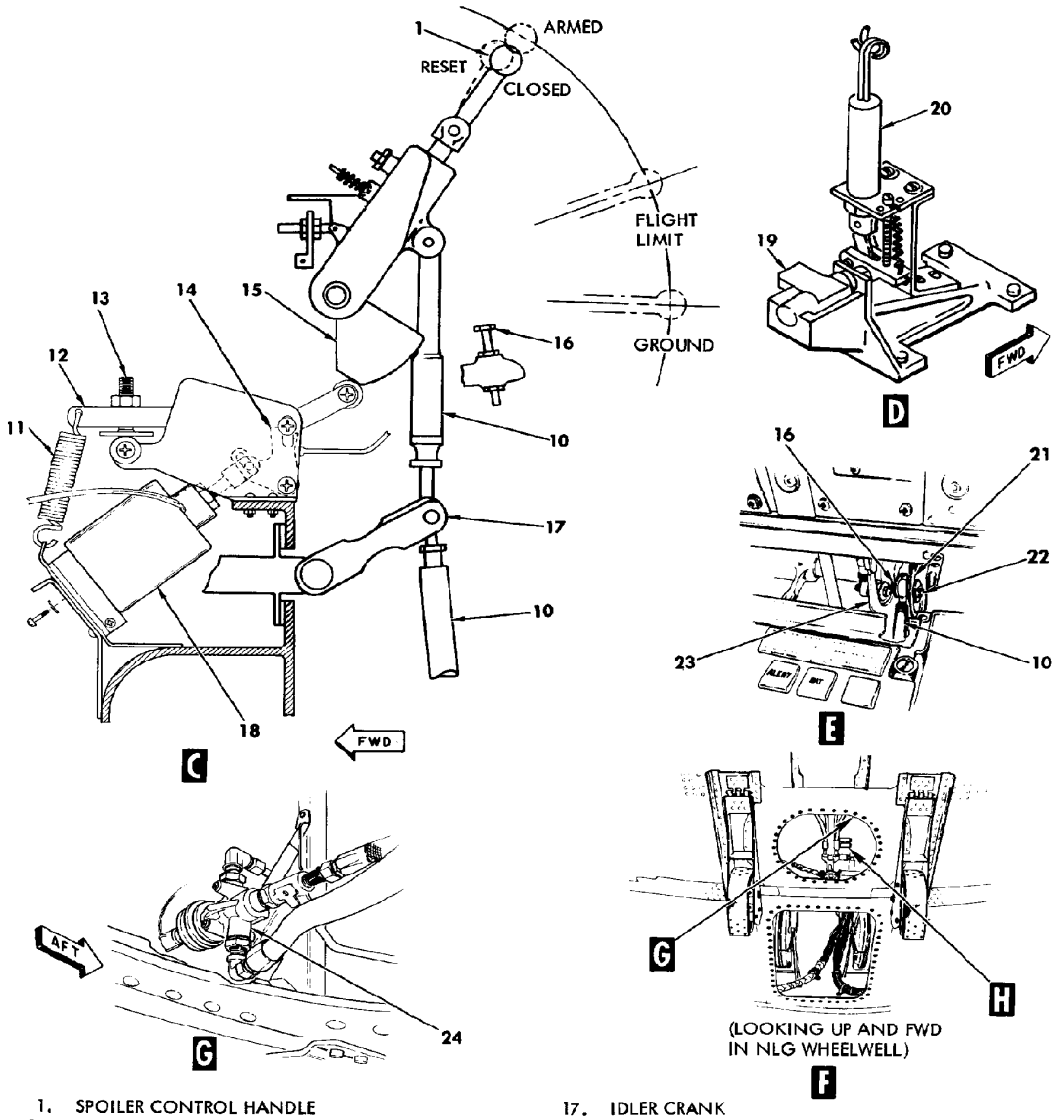

1. SPOILER CONTROL HANDLE
10. PUSHRODS
11. HANDLE DETENT SPRING
12. HANDLE DETENT SPRING LEVER
13. HANDLE DETENT SPRING LOAD ADJUSTING BOLT
14. LOCKOUT PAWL (INTERPAWL)
15. CONTROL HANDLE DETENT CAM
16. GROUND LIMIT STOP BOLT
17. IDLER CRANK
18. HANDLE DETENT SOLENOID
19. FLIGHT LIMIT SELECTOR CAM
20. GROUND SPOILER SOLENOID
21. FRICTION TRACK
22. IDLER CRANK DRAG NUT
23. CLOSED-POSITION DETENT LEVER
24. CABLE SERVO ACTUATOR SHUTOFF VALVE

Spoiler Input and Output Systems Component Locations (Sheet 2 of 5)

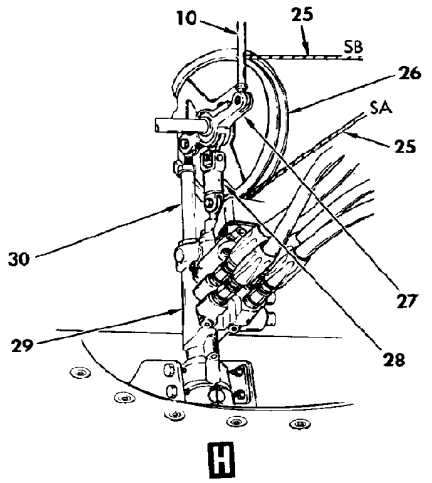

CABLE CODE	DESCRIPTION	FUNCTION FOR TENSION IN CABLE
SA, SLA, SRA	FUSELAGE LEFT WING RIGHT WING	CLOSES SPOILERS
SB, SLB, SRB	FUSELAGE LEFT WING RIGHT WING	OPENS SPOILERS

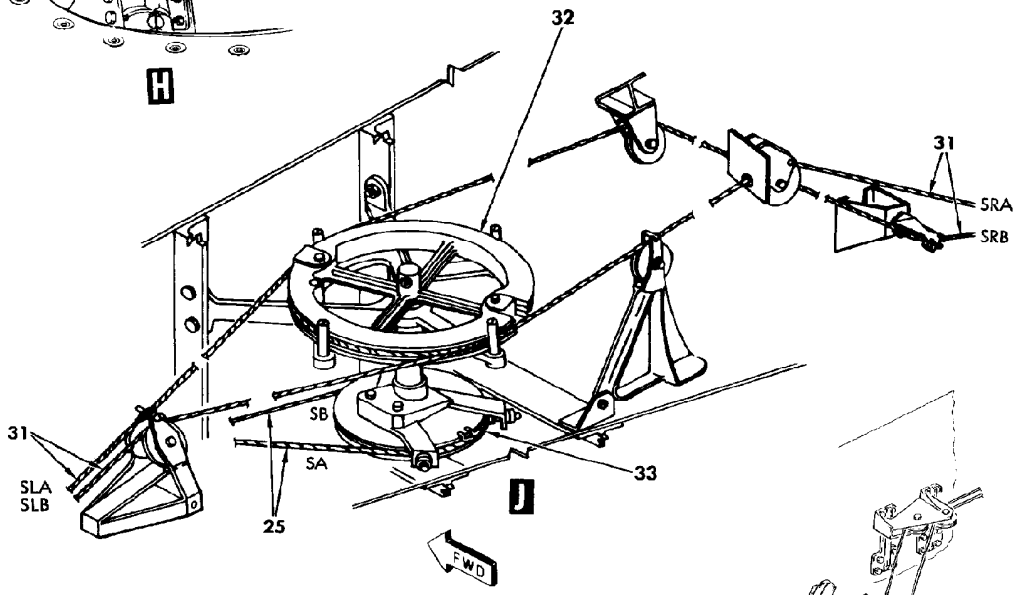

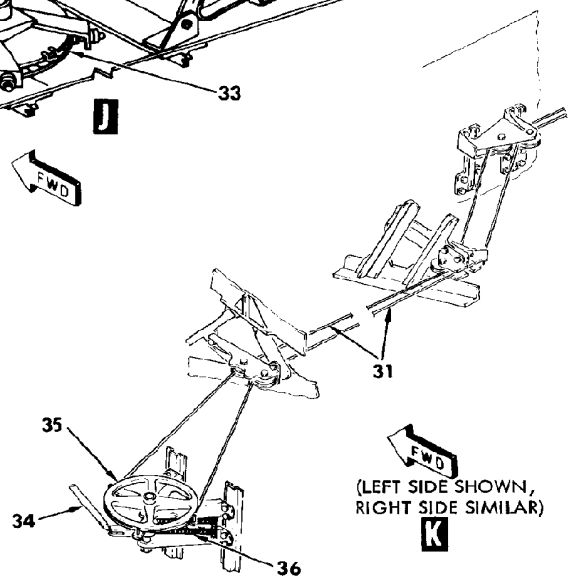

10. PUSHROD
25. CONTROL CABLES
26. CABLE DRIVE QUADRANT
27. INPUT LEVER
28. SPRING CARTRIDGE
29. CABLE SERVO ACTUATOR
30. DRIVE PISTON
31. WING CABLES
32. CENTER DRIVE QUADRANT OUTPUT PULLEY
33. CENTER DRIVE QUADRANT INPUT PULLEY
34. SERVO ACTUATOR INPUT PUSHROD
35. SERVO ACTUATOR INPUT QUADRANT
36. QUADRANT RETURN SPRINGS

Spoiler Input and Output Systems Component Locations (Sheet 3 of 5)

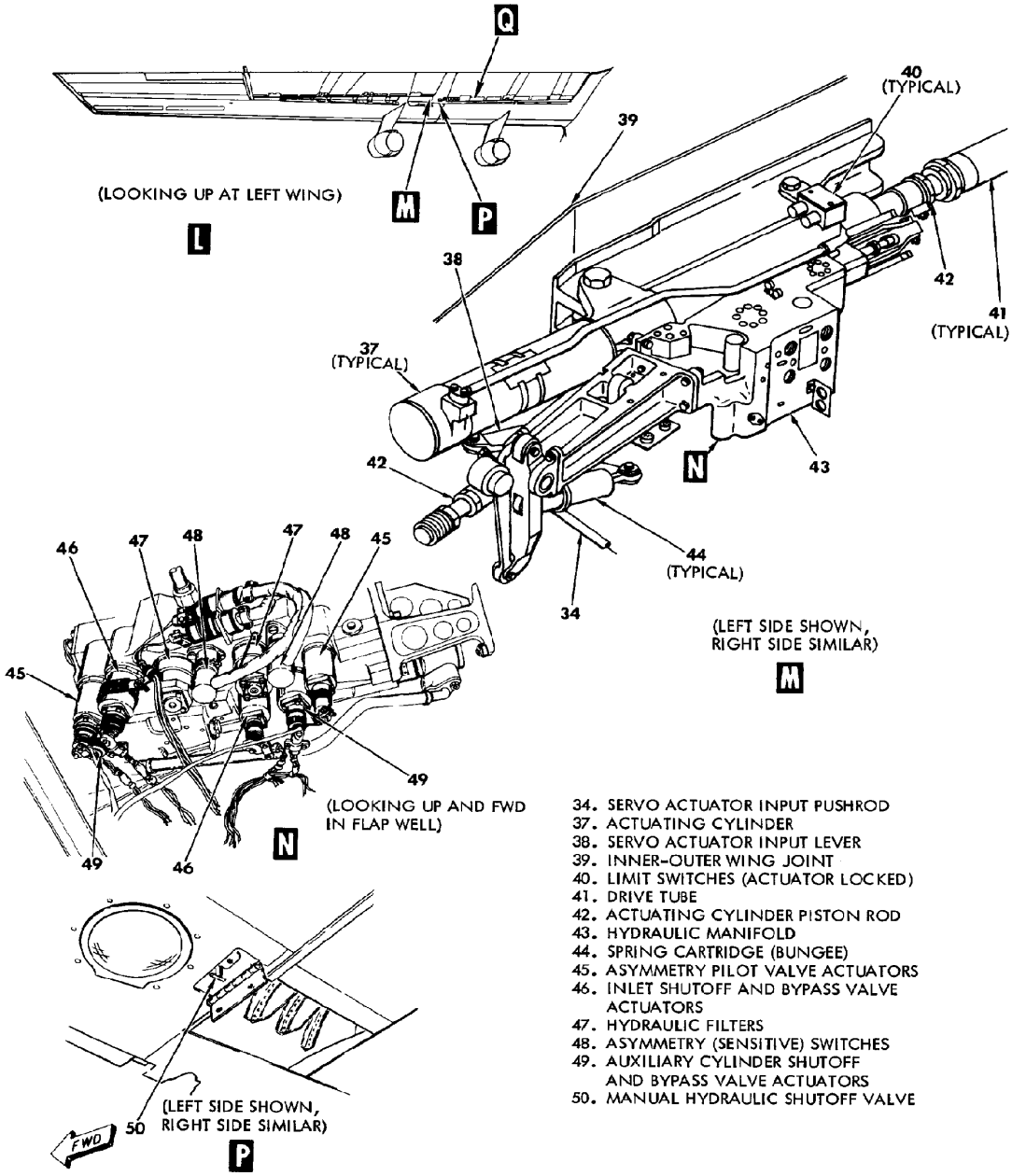

34. SERVO ACTUATOR INPUT PUSHROD
37. ACTUATING CYLINDER
38. SERVO ACTUATOR INPUT LEVER
39. INNER-OUTER WING JOINT
40. LIMIT SWITCHES (ACTUATOR LOCKED)
41. DRIVE TUBE
42. ACTUATING CYLINDER PISTON ROD
43. HYDRAULIC MANIFOLD
44. SPRING CARTRIDGE (BUNGEE)
45. ASYMMETRY PILOT VALVE ACTUATORS
46. INLET SHUTOFF AND BYPASS VALVE ACTUATORS
47. HYDRAULIC FILTERS
48. ASYMMETRY (SENSITIVE) SWITCHES
49. AUXILIARY CYLINDER SHUTOFF AND BYPASS VALVE ACTUATORS
50. MANUAL HYDRAULIC SHUTOFF VALVE

Spoiler Input and Output Systems Component Locations (Sheet 4 of 5)

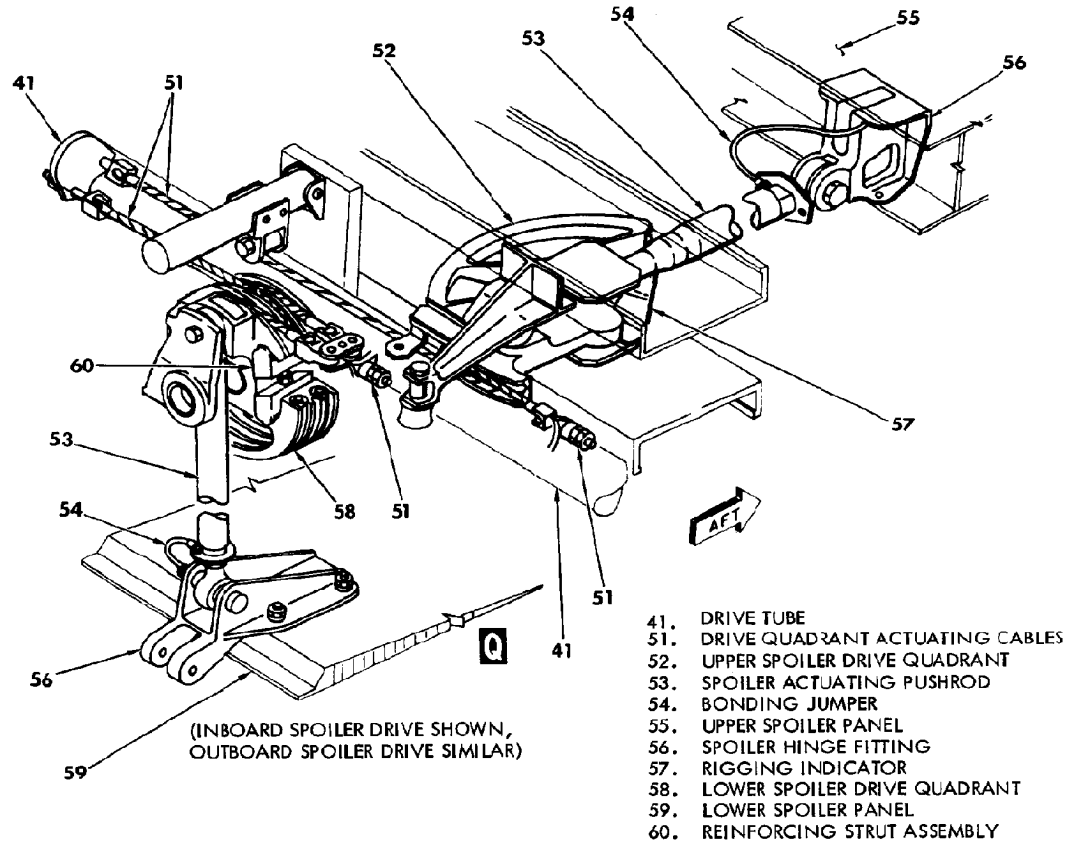

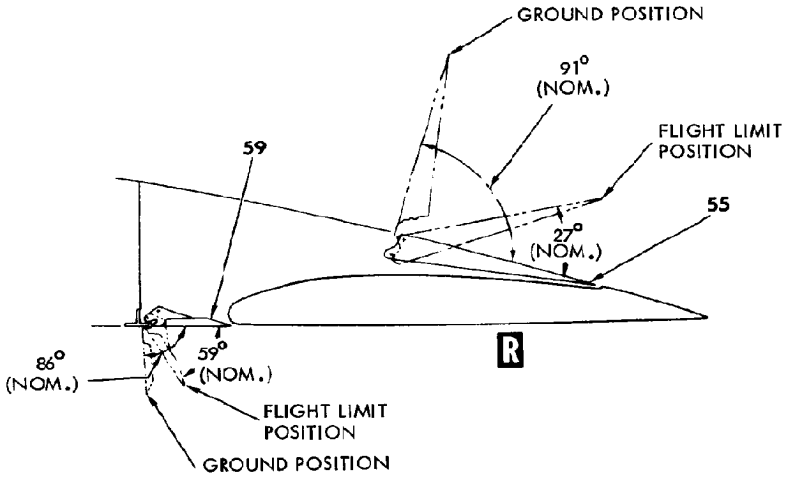

Spoiler Input and Output Systems Component Locations (Sheet 5 of 5)

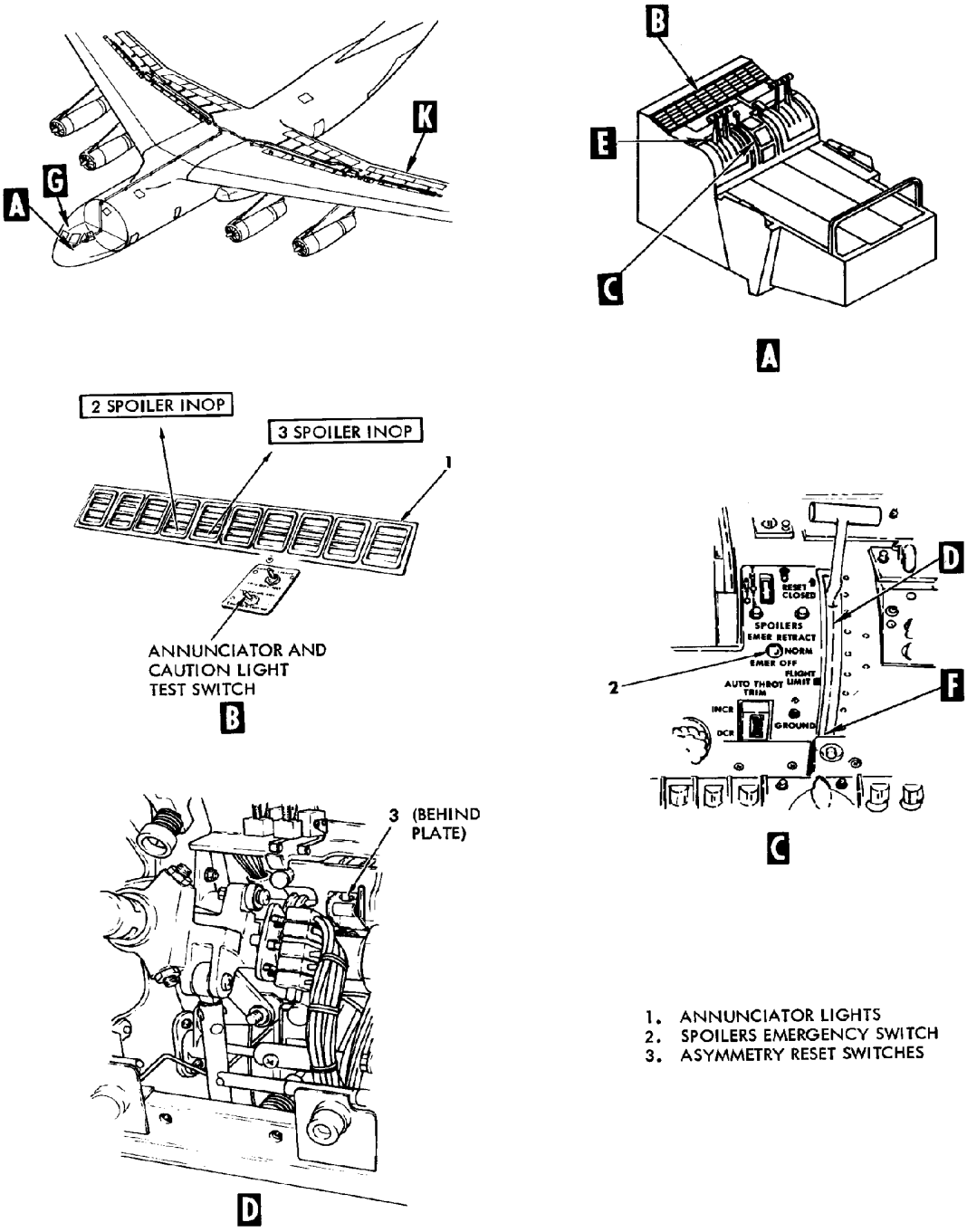

1. ANNUNCIATOR LIGHTS
2. SPOILERS EMERGENCY SWITCH
3. ASYMMETRY RESET SWITCHES

Spoiler Asymmetry and Emergency Retract Systems Component Locations
(Sheet 1 of 3)

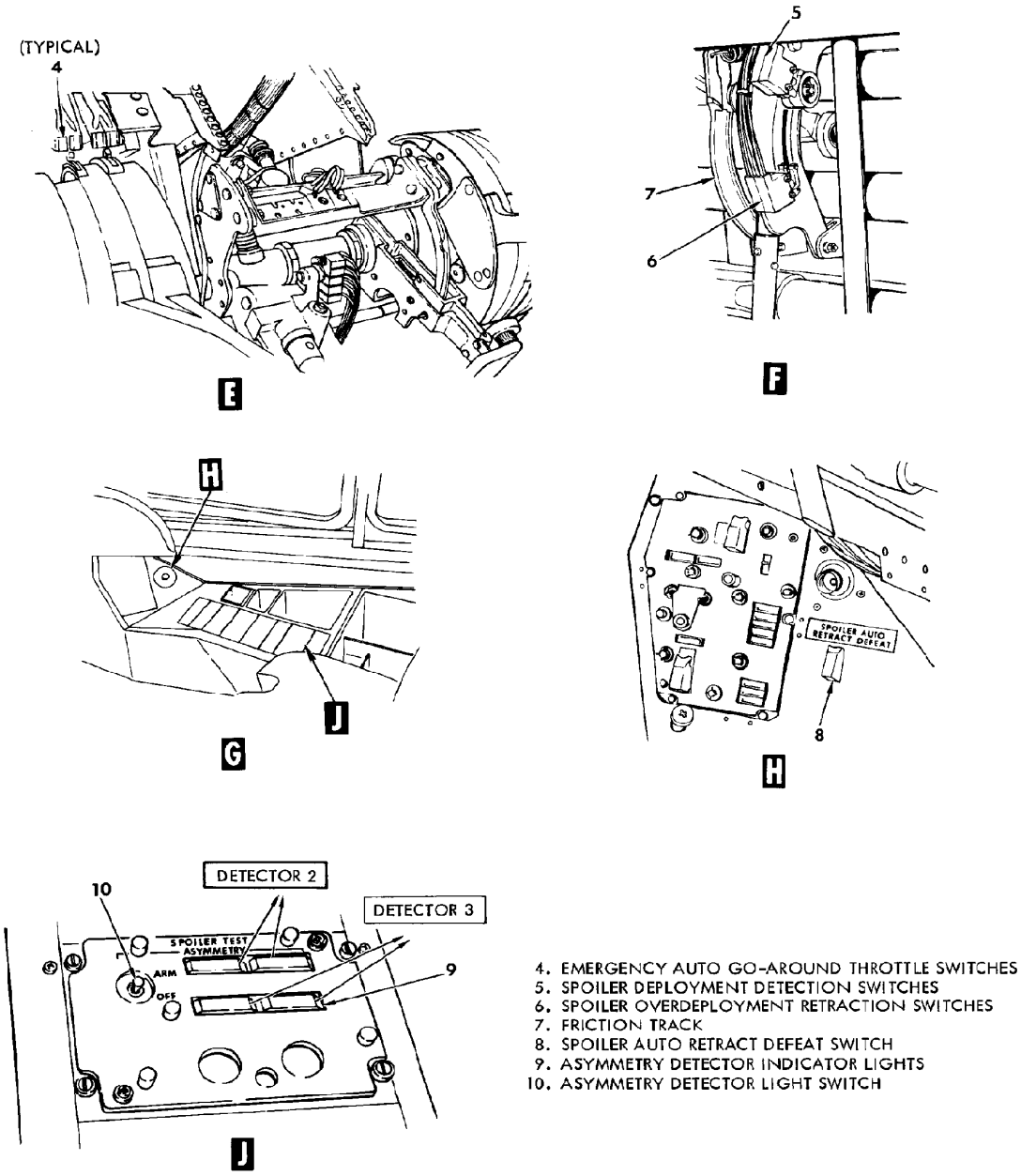

Spoiler Asymmetry and Emergency Retract Systems Component Locations
(Sheet 2 of 3)

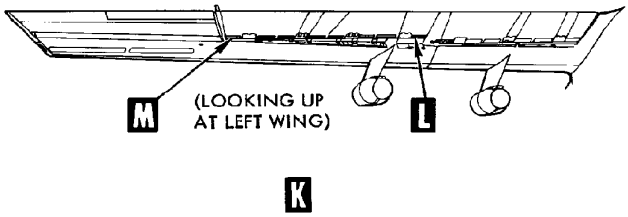

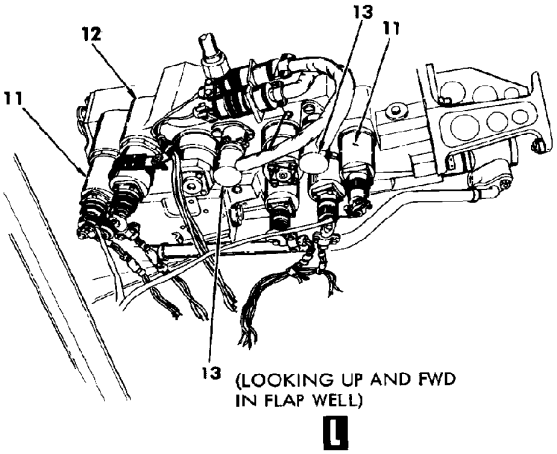

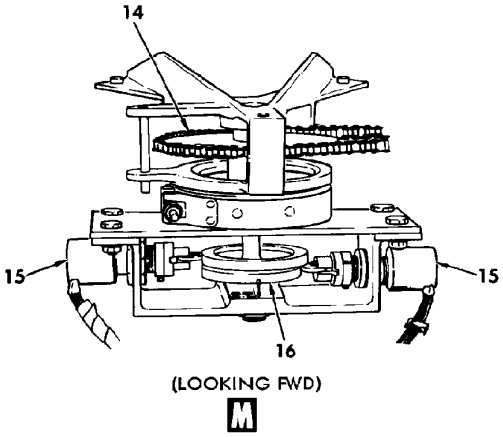

11. ASYMMETRY PILOT VALVE ACTUATORS
12. SPOILER SERVO ACTUATOR HYDRAULIC MANIFOLD
13. ASYMMETRY (SENSITIVE) SWITCHES
14. DRIVE CHAIN AND SPROCKET
15. ASYMMETRY DETECTOR SWITCHES
16. DETECTOR SWITCH ACTUATING CAMS

Spoiler Asymmetry and Emergency Retract Systems Component Locations
(Sheet 3 of 3)

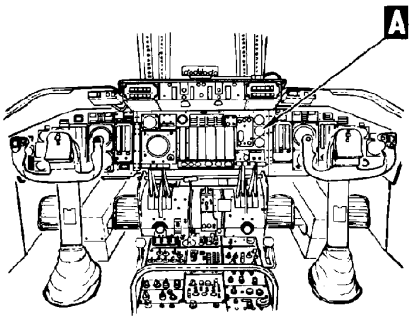

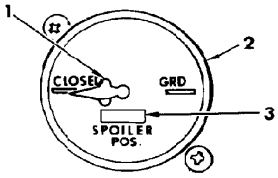

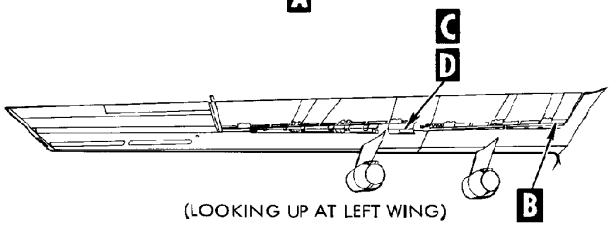

(LOOKING UP AT LEFT WING)

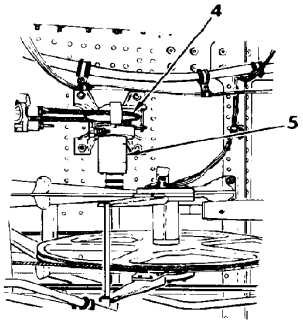

(LOOKING FWD, INNER WING REAR BEAM INBD OF FLAPS)
(LEFT SIDE SHOWN, RIGHT SIDE SIMILAR)
B

1. LEFT AND RIGHT WING SPOILERS POINTERS
2. SPOILER POSITION INDICATOR
3. LOCKED/UNLKD FLAG
4. DRIVE CHAIN AND SPROCKET
5. SPOILER POSITION TRANSMITTER
6. ACTUATING CYLINDER LIMIT SWITCH
7. SPOILER SERVO ACTUATOR ACTUATING CYLINDER

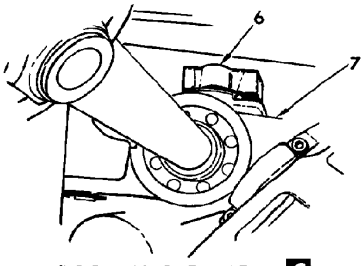

(LOOKING OUTBD AT TOP OF ACTUATOR)
(LEFT SIDE SHOWN, RIGHT SIDE SIMILAR)
C

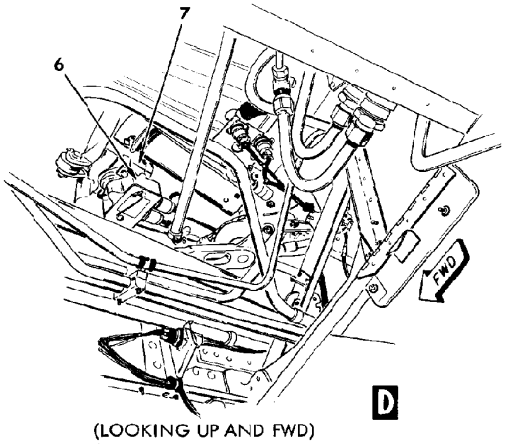

(LOOKING UP AND FWD)
(LEFT SIDE SHOWN, RIGHT SIDE SIMILAR)

Spoiler Position Indication System Component Locations

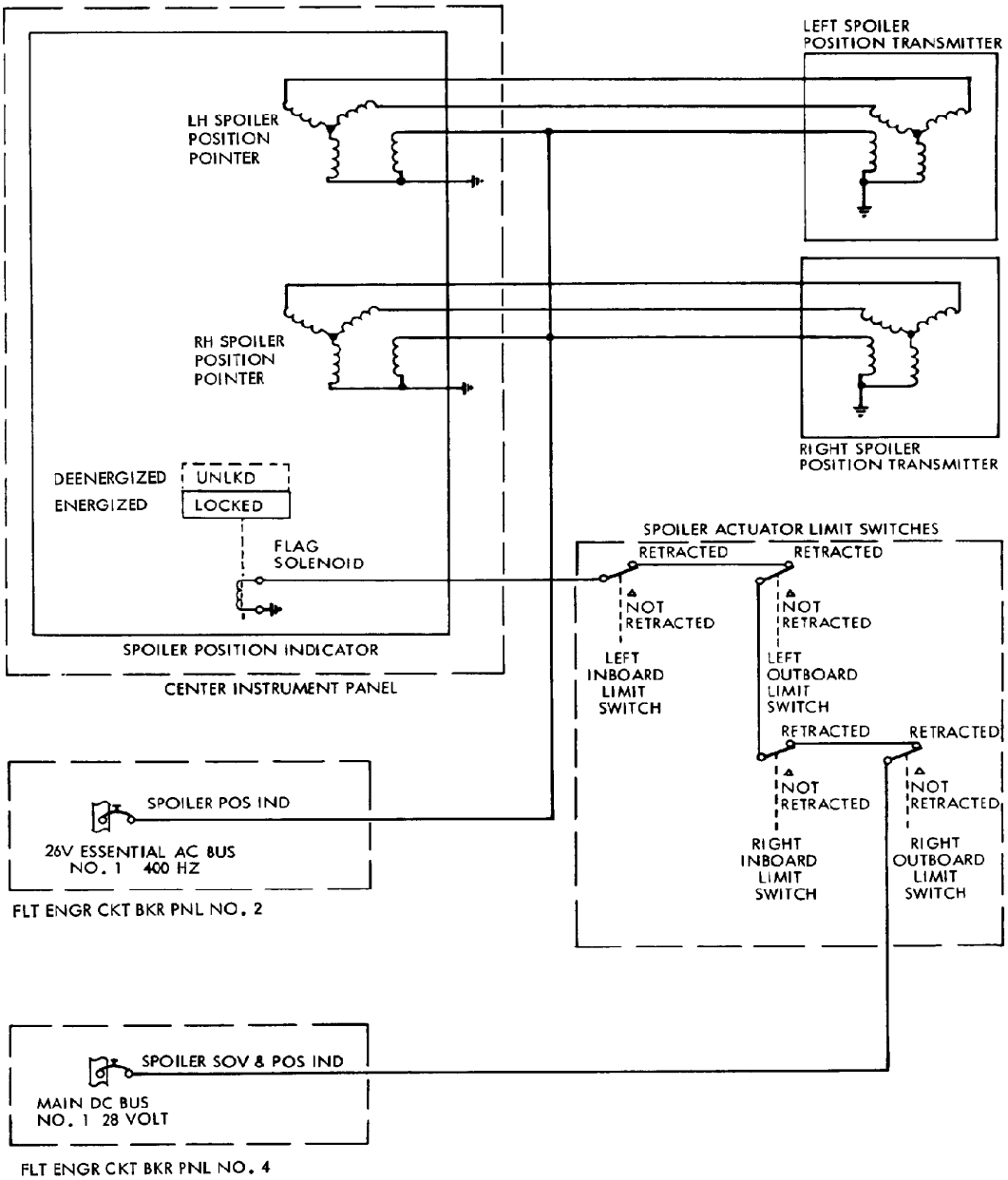

Spoilers Position Indication System Schematic Diagram

FUEL SYSTEM

General Description

The fuel system of the C-141B airplane includes storage, refueling and defueling, and system indication. The overall functions and operation of the fuel system are described in this section.

Storage Subsystem

The airplane fuel supply is carried in 10 tanks located within the wings. Four main tanks, four auxiliary tanks, and two extended range tanks supply fuel to the four engines and the auxiliary power unit. Plumbing, pumps, and valves are, for the most part, contained within the tanks. Tank boundaries are formed by the upper and lower wing surfaces, the front and rear wing beams, and the end bulkheads. Tank boundaries, which begin near the fuselage and extend to the wing tip bulkhead, are formed by the integrally stiffened upper and lower wing panels, front and rear wing beams, and the reinforced end bulkheads. The basic fuel supply is stored in the four main tanks and the four auxiliary tanks. All the tanks are completely sealed to prevent leaks and corrosion.

Each main tank is a single compartment which primarily feeds the tank's associated engine. The No. 1 and No. 4 main tanks are in the outermost section of each wing. The No. 2 and No. 3 main tanks are in the innermost section of each wing. Inside each main tank is a separate compartment called the surge box.

The single-compartmented auxiliary fuel tanks supply fuel through a wing manifold to their related engines, although a crossfeed valve system allows fuel from any auxiliary tank to supply any engine. The No. 1 and No. 4 auxiliary tanks are located inboard next to their respective main tanks, and the No. 2 and No. 3 auxiliary tanks are behind and next to their respective main tanks. The auxiliary tanks are not intended for direct engine feed.

Each extended range tank normally supplies fuel via the wing manifolds to the two engines on the tank's respective wing. The extended range tanks are located between the outboard auxiliary tanks and the inboard auxiliary and main tanks. All tanks can be pressure refueled selectively or in unison through the single point refueling and aerial refueling systems or they can be filled individually through conventional filler ports in the upper wing surface.

On the lower wing surface tank bottoms are condensate drain valves. Each poppet-type valve can be depressed with a drain tube assembly to catch tank condensation.

The total usable fuel capacity is approximately 23,000 U.S. gallons (150,000 pounds). The fuel vent system protects the airplane fuel tanks from excessive internal or external pressures that could cause structural damage. The fuel vent system compensates for pressure changes when the airplane is on the ground or in flight. If a fuel level control valve fails in the open position during refueling operations, the fuel vent system has the capacity to handle the overflow without causing damage to the airplane wing structure.

NOTE

THE RIGHT WING IS A MIRROR OPPOSITE OF THE LEFT WING.

1. INBOARD AUXILIARY TANK
2. INBOARD MAIN TANK SURGE BOX
3. INBOARD VENT BOX
4. OUTBOARD VENT BOX
5. OUTBOARD MAIN TANK SURGE BOX SUMP
6. OUTBOARD MAIN TANK SURGE BOX
7. OUTBOARD MAIN TANK
8. OUTBOARD AUXILIARY TANK
9. OUTBOARD COMPARTMENT OF EXTENDED RANGE TANK
10. INBOARD COMPARTMENT OF EXTENDED RANGE TANK
11. INBOARD MAIN TANK
12. OPEN PASSAGEWAYS
13. CENTER WING DRY BAY

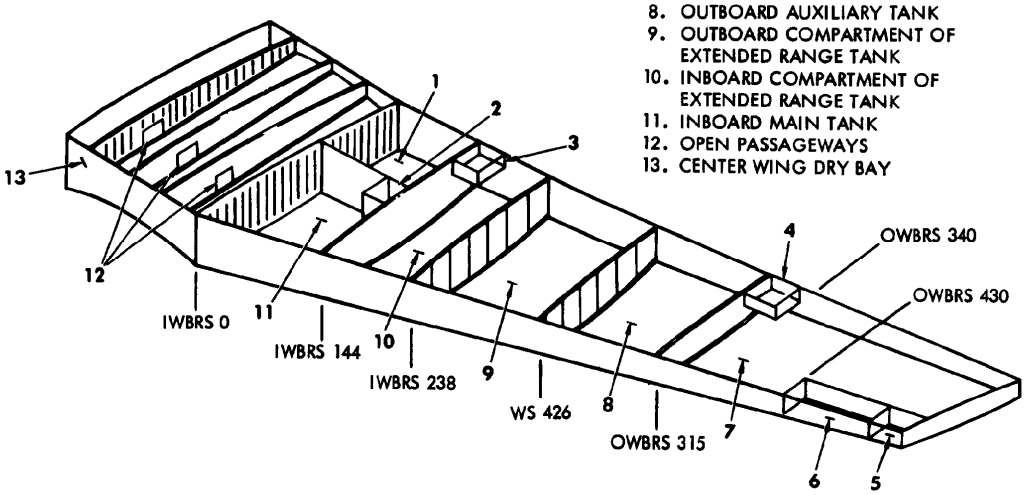

Internal Tank and Dry Bay Access Provisions

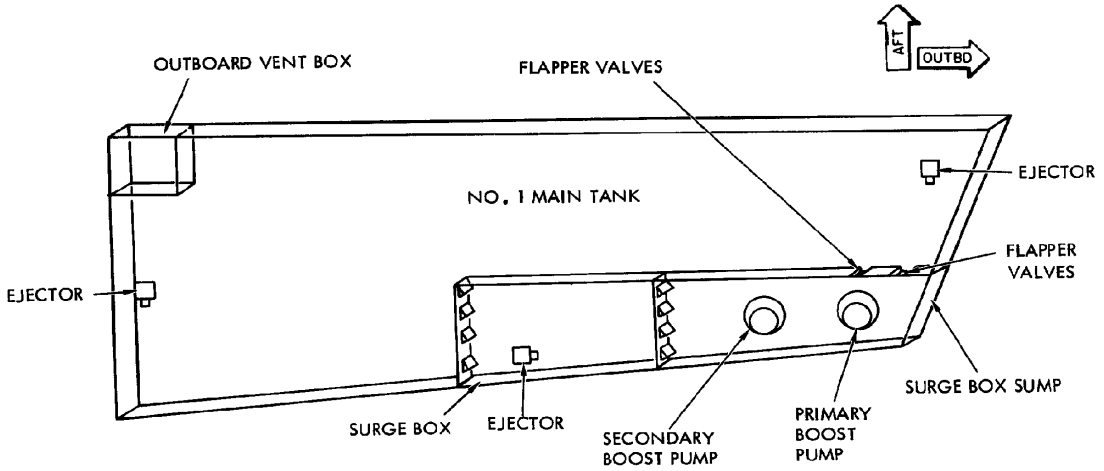

SURGE BOX AND EJECTORS

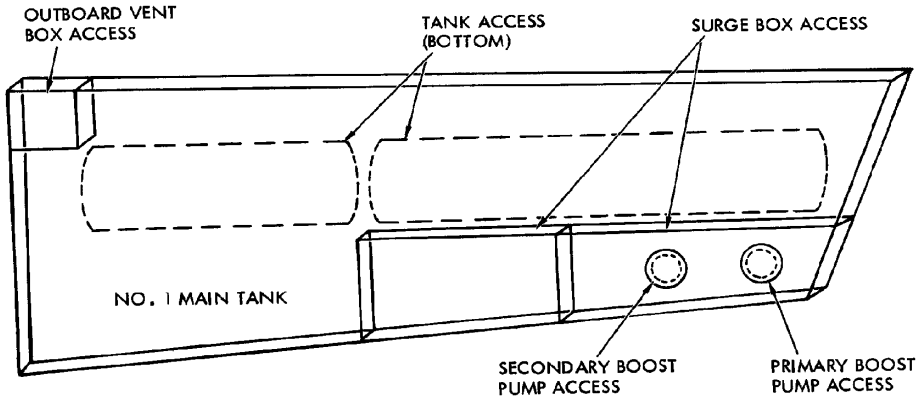

OUTBOARD MAIN TANK ACCESS PANELS

NOTE

NO. 1 MAIN TANK SHOWN, NO. 4 MAIN TANK SIMILAR

Outboard Main Tank Provisions

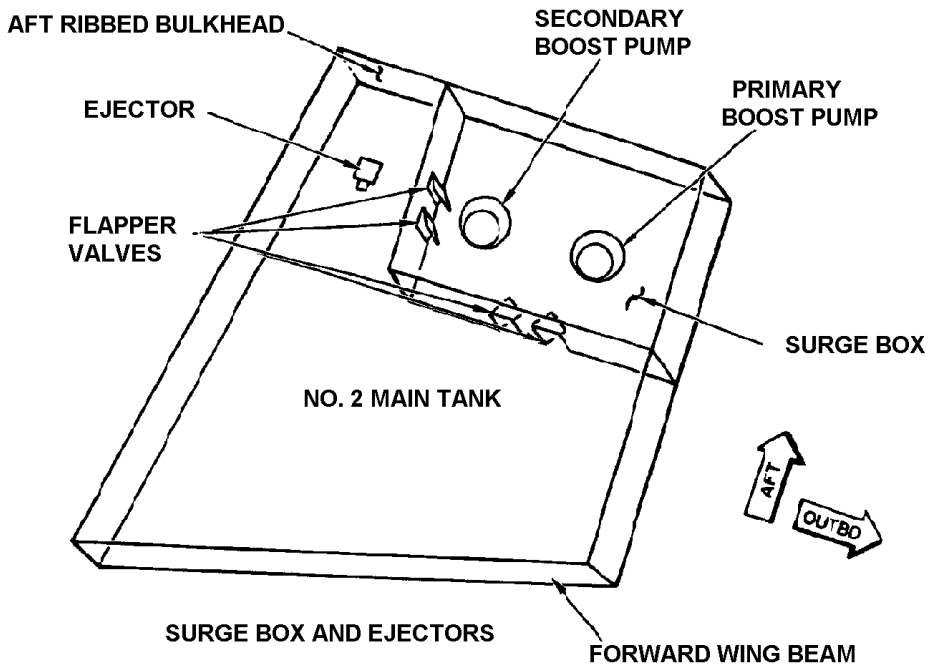

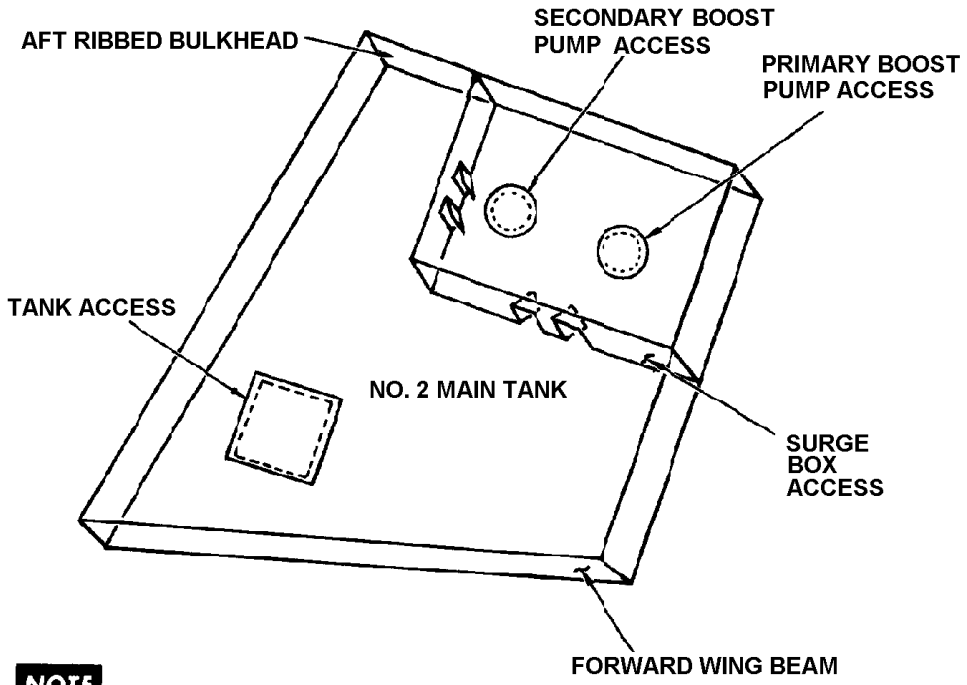

NOTE

NO. 2 MAIN TANK SHOWN,
NO. 3 MAIN TANK SIMILAR

ACCESS PANELS

Inboard Main Tank Provisions

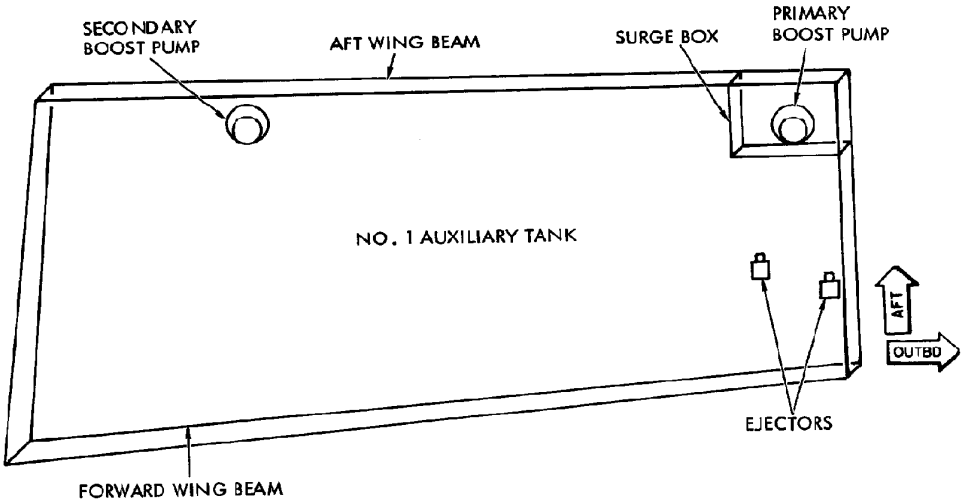

SURGE BOX AND EJECTORS

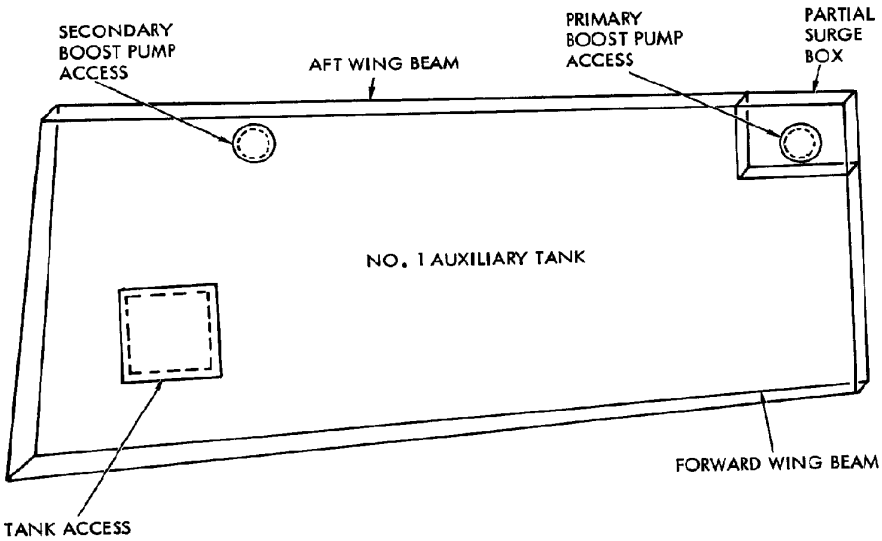

ACCESS PANELS

NOTE

NO. 1 AUXILIARY TANK SHOWN, NO. 4 AUXILIARY TANK SIMILAR

Outboard Auxiliary Tank Provisions

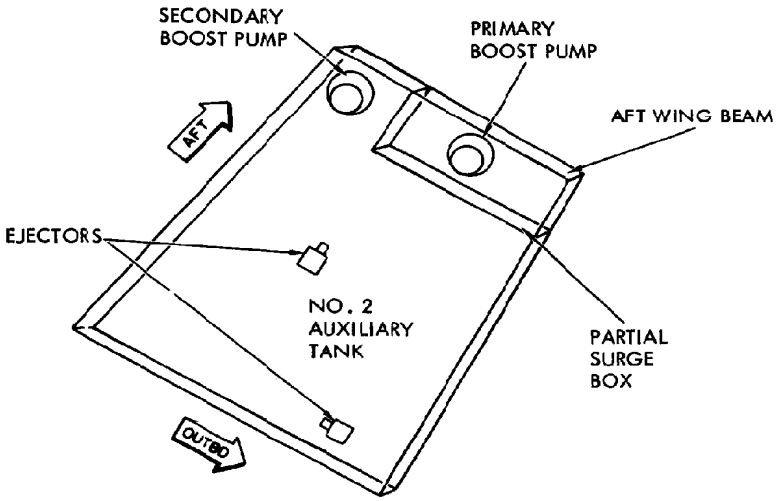

SURGE BOX AND EJECTORS

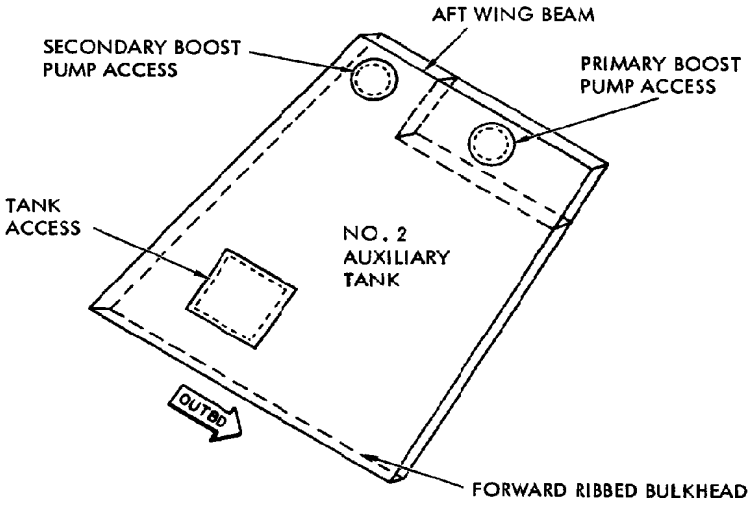

ACCESS PANELS

NOTE

NO. 2 AUXILIARY TANK SHOWN, NO. 3 AUXILIARY TANK SIMILAR

Inboard Auxiliary Tank Provisions

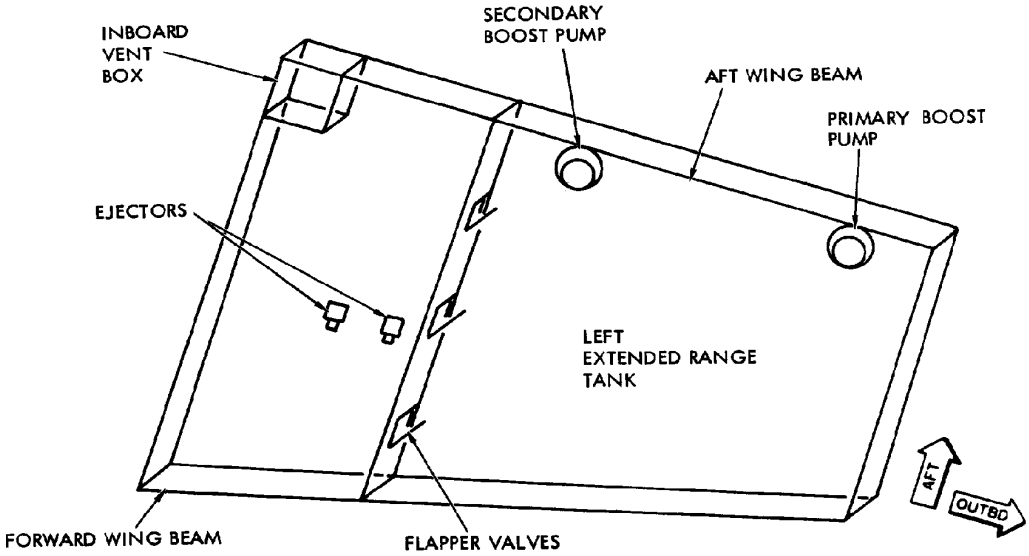

TANK STRUCTURE AND EJECTORS

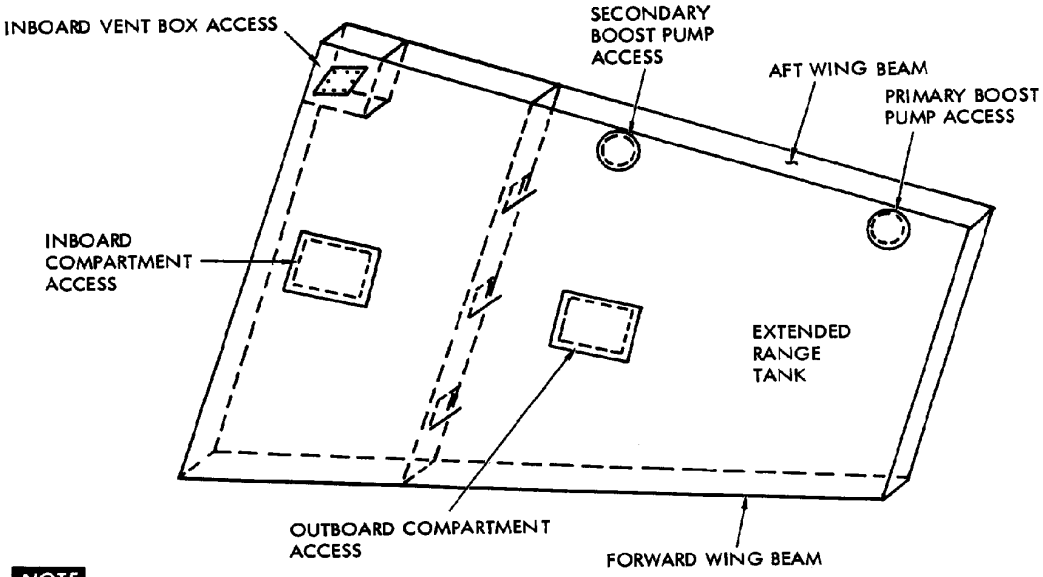

ACCESS PANELS

NOTE

LEFT EXTENDED RANGE TANK SHOWN, RIGHT EXTENDED RANGE TANK SIMILAR

Extended Range Tank Provisions

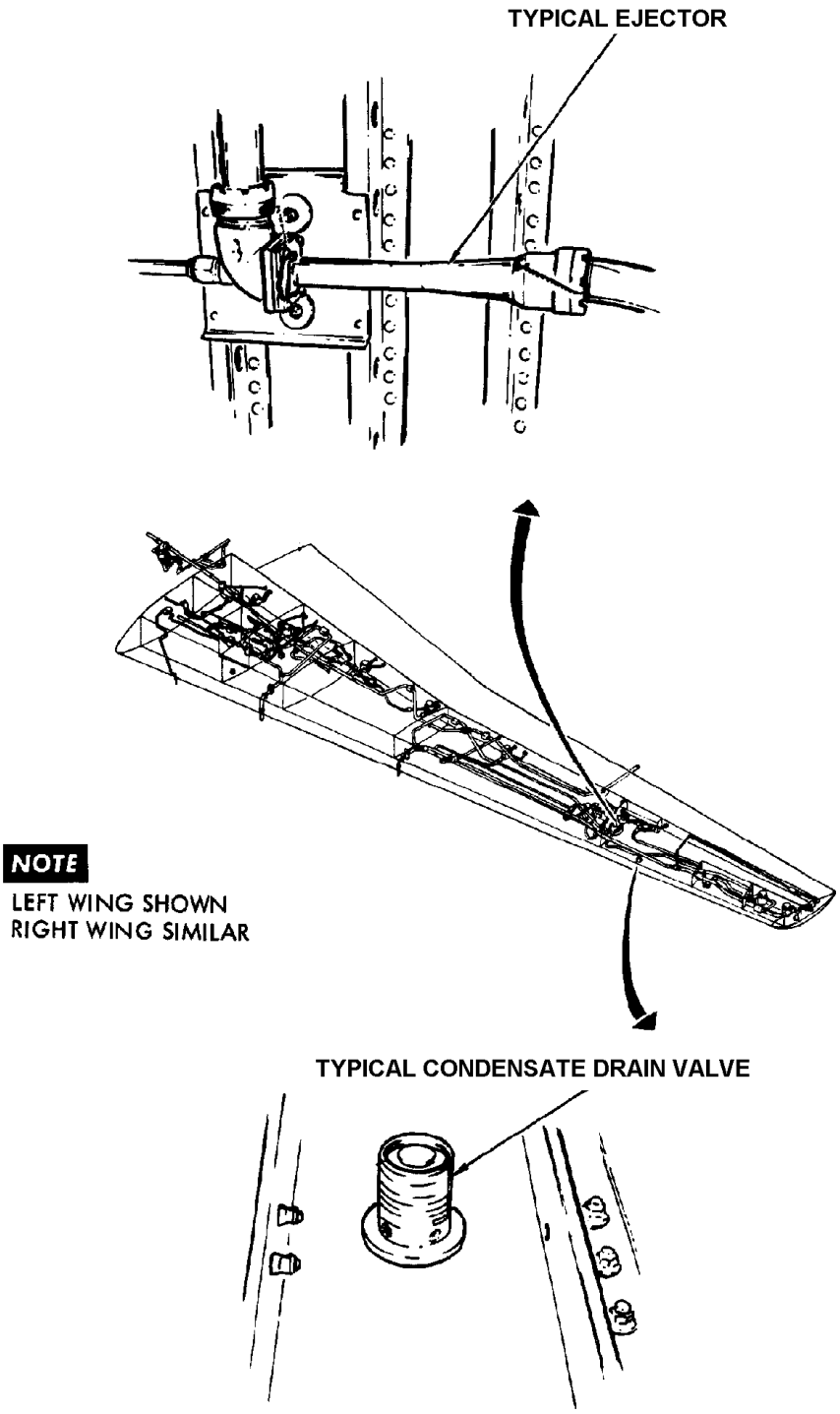

Storage System Condensate Components

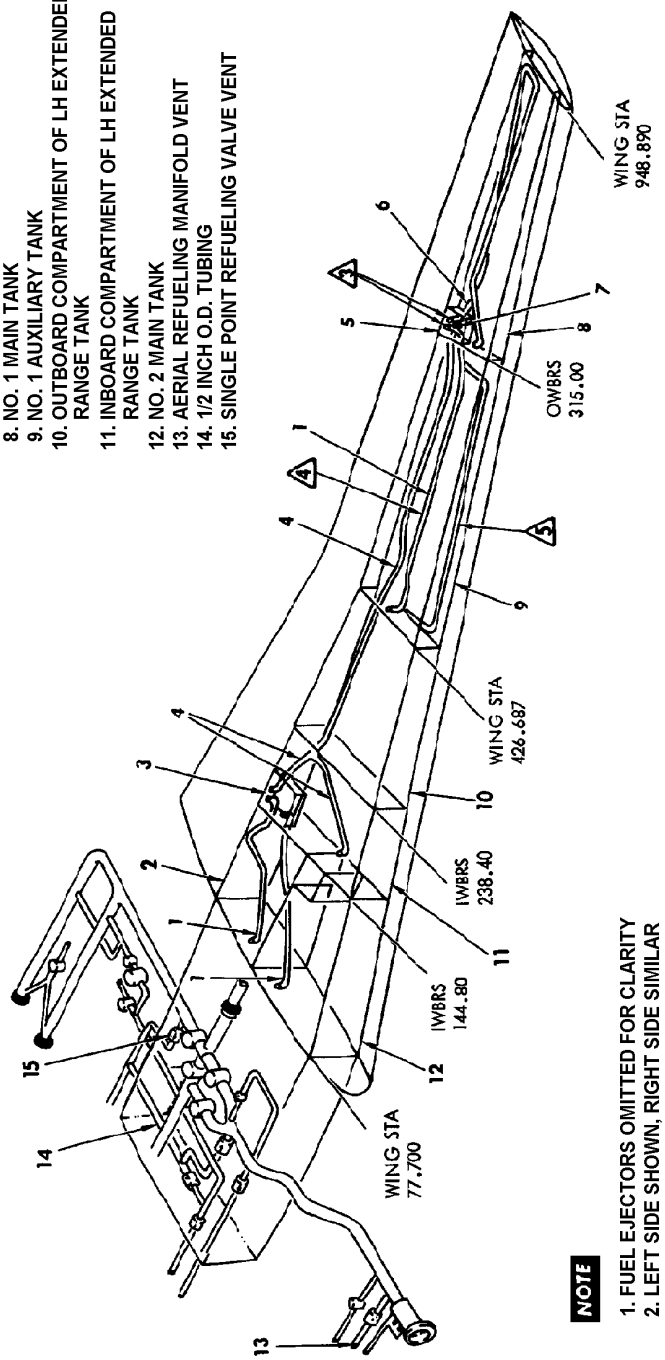

1. 2 1/2 INCH O.D. TUBING
2. NO. 2 AUXILIARY TANK
3. INBOARD VENT BOX
4. 3 1/2 INCH O.D. TUBING
5. OUTBOARD VENT BOX
6. 1 1/2 INCH O.D. TUBING
7. VENT TO ATMOSPHERE
8. NO. 1 MAIN TANK
9. NO. 1 AUXILIARY TANK
10. OUTBOARD COMPARTMENT OF LH EXTENDED RANGE TANK
11. INBOARD COMPARTMENT OF LH EXTENDED RANGE TANK
12. NO. 2 MAIN TANK
13. AERIAL REFUELING MANIFOLD VENT
14. 1/2 INCH O.D. TUBING
15. SINGLE POINT REFUELING VALVE VENT

NOTE

1. FUEL EJECTORS OMITTED FOR CLARITY
2. LEFT SIDE SHOWN, RIGHT SIDE SIMILAR

3 UPTURNED VENT LINES HAVE BAFFLE-TYPE SEALS ON BELL MOUTH OPENINGS TO PREVENT FUEL FROM BEING DUMPED INTO STANDPIPE.

4 AIRPLANES AF63-8705, 63-8076, AND 63-8077.

5 AIRPLANES AF61-2775 THROUGH 61-2779 AND 63-8078.

Vent System Provisions

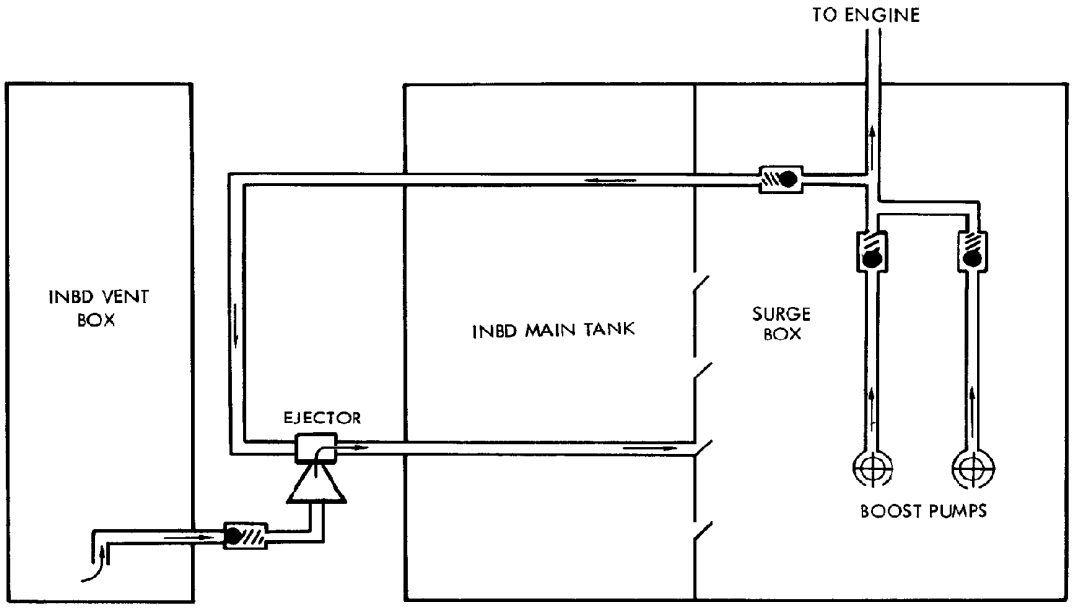

INBOARD VENT SCAVENGE SYSTEM

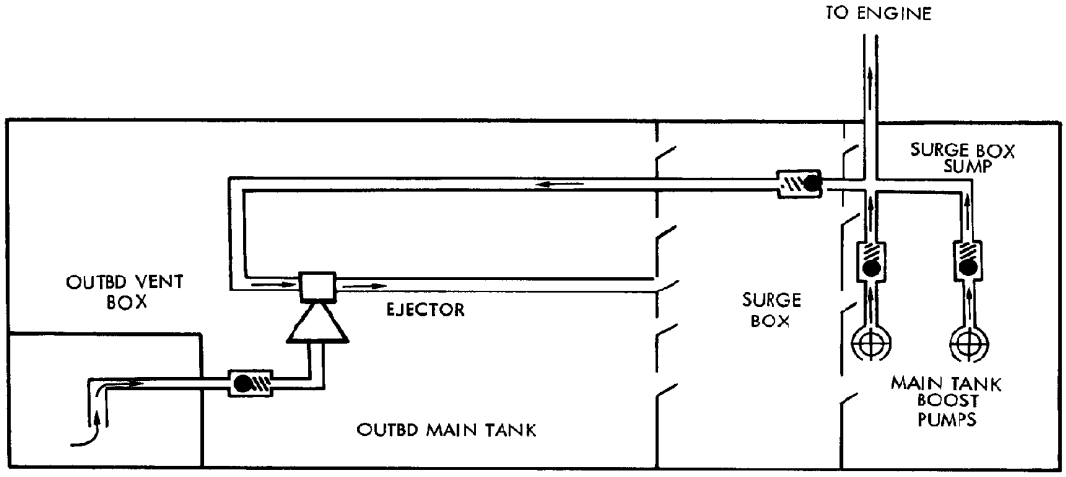

OUTBOARD VENT SCAVENGE SYSTEM

Vent Scavenge System

Distribution Subsystem

The airplane distribution system provides the plumbing, pumps, and valves for supplying fuel to the engines. Twenty boost pumps within the tanks supply fuel to the engines. During normal fuel management, fuel from the main tanks is the last used although all pumps are running simultaneously. Boost pumps are also used for jettison, defueling, and fuel transfer. Each boost pump has an individual control switch located on the flight engineer's fuel management panel. A one-way check valve, installed in each boost pump output line, provides independent boost pump operation. During boost pump operation, a system of ejectors provides fuel transfer.

The ejectors maintain boost pump fuel supply and scavenge the fuel vent boxes. Boost pump low pressure switches on each boost pump discharge line illuminate PRESS LOW warning lights on the fuel management panel when boost pump output pressure drops. Each tank also contains a fuel level control valve which governs the maximum level to which the tanks may be filled during single-point refueling or fuel transfer. Inter-tank fuel flow is governed by three separation valves. The valves function to keep an even fuel burnoff from each wing, and prevent unbalanced conditions during crossfeed operation.

Crossfeed operation also encompasses four crossfeed valves which aid in supplying engine fuel from sources other than the main tanks. The valves and tanks are connected by a series of fuel feed lines and a common manifold. Other valves integral to the distribution system are the APU fuel supply valve and the emergency fuel shutdown valves. The APU valve, located in the center wing dry bay, supplies fuel to the APU from the No. 2 main tank. The emergency fuel shutdown valves, located on the wing front beam, close down the engine fuel feed.

Single Point Refueling (SPR) System

Refueling operations are normally accomplished through the single point refueling provisions. The single point refueling system permits rapid refueling of any individual tank or all tanks simultaneously. Two refueling adapters in the right main landing gear pod accommodate fuel servicing. A refueling manifold extends from the adapters to the center wing dry bay where the refueling manifold connects to the wing fuel manifold. The refueling manifold is isolated from the wing fuel manifold by a ground isolation valve. A manual drain valve drains residual fuel from the refueling manifold and adapters. A motorized drain pump and valve is also used to drain residual fuel and pump the fuel to the No. 3 main tank.

The aerial refueling system provides a means of refueling, in flight, any or all airplane fuel tanks from a boom-type tanker airplane. The central feature of the aerial refueling system is the universal aerial refueling receptacle slipway installation (UARRSI). The UARRSI is a self-contained unit which accommodates a refueling boom nozzle. A hydraulically powered door exposes the refueling receptacle. Insertion of the boom nozzle into the receptacle opens a poppet valve which allows fuel transfer into the airplane. An induction coil in the refueling receptacle mates with a coil on the boom nozzle to provide a communication link between the two airplanes. Two aerial refueling isolation valves isolate the aerial refueling manifold from the wing fuel manifold.

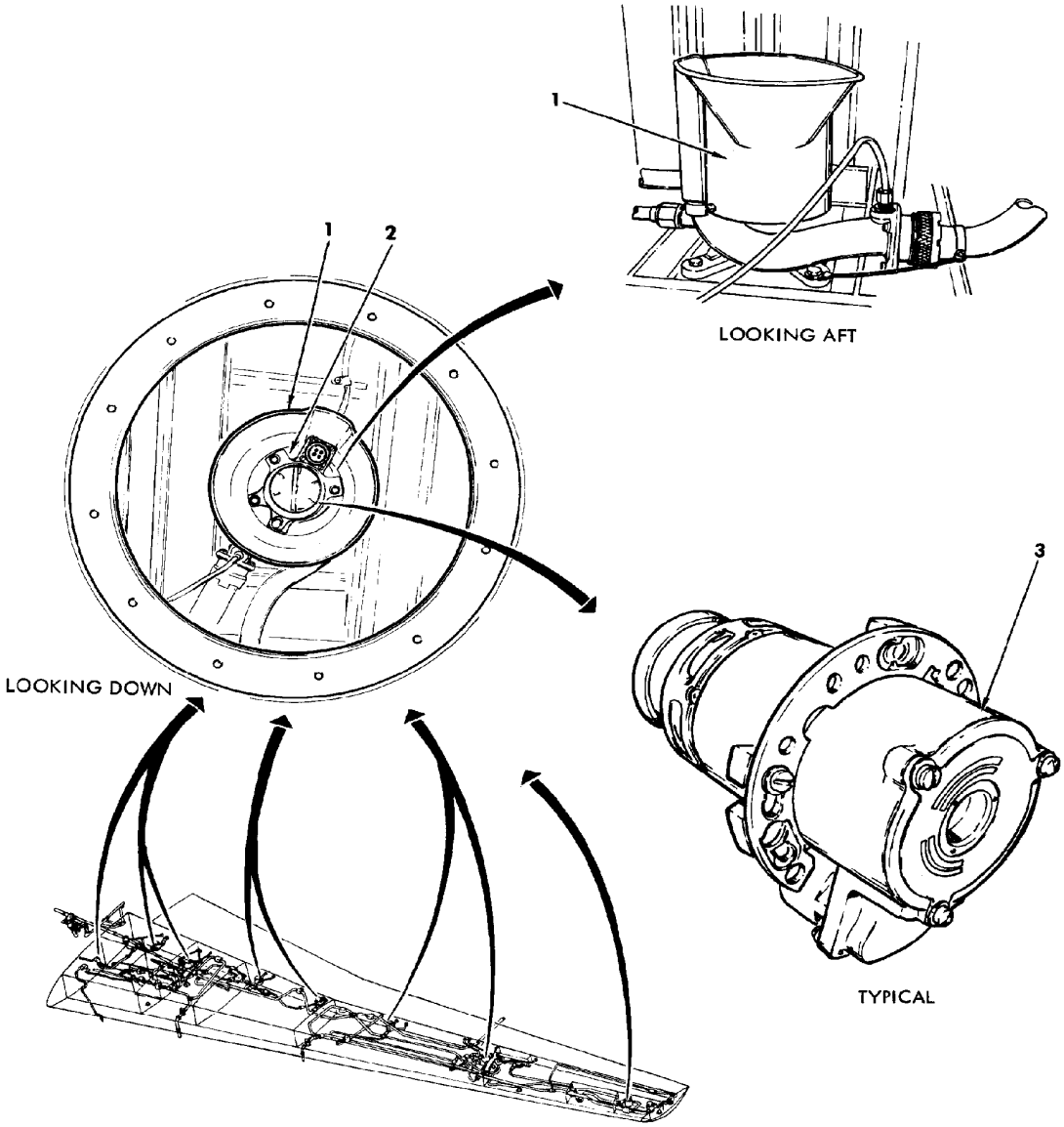

1. BOOST PUMP GUIDE
2. BOOST PUMP SCROLL HOUSING
3. BOOST PUMP ELEMENT

Distribution System Component Locations (Sheet 1 of 6)

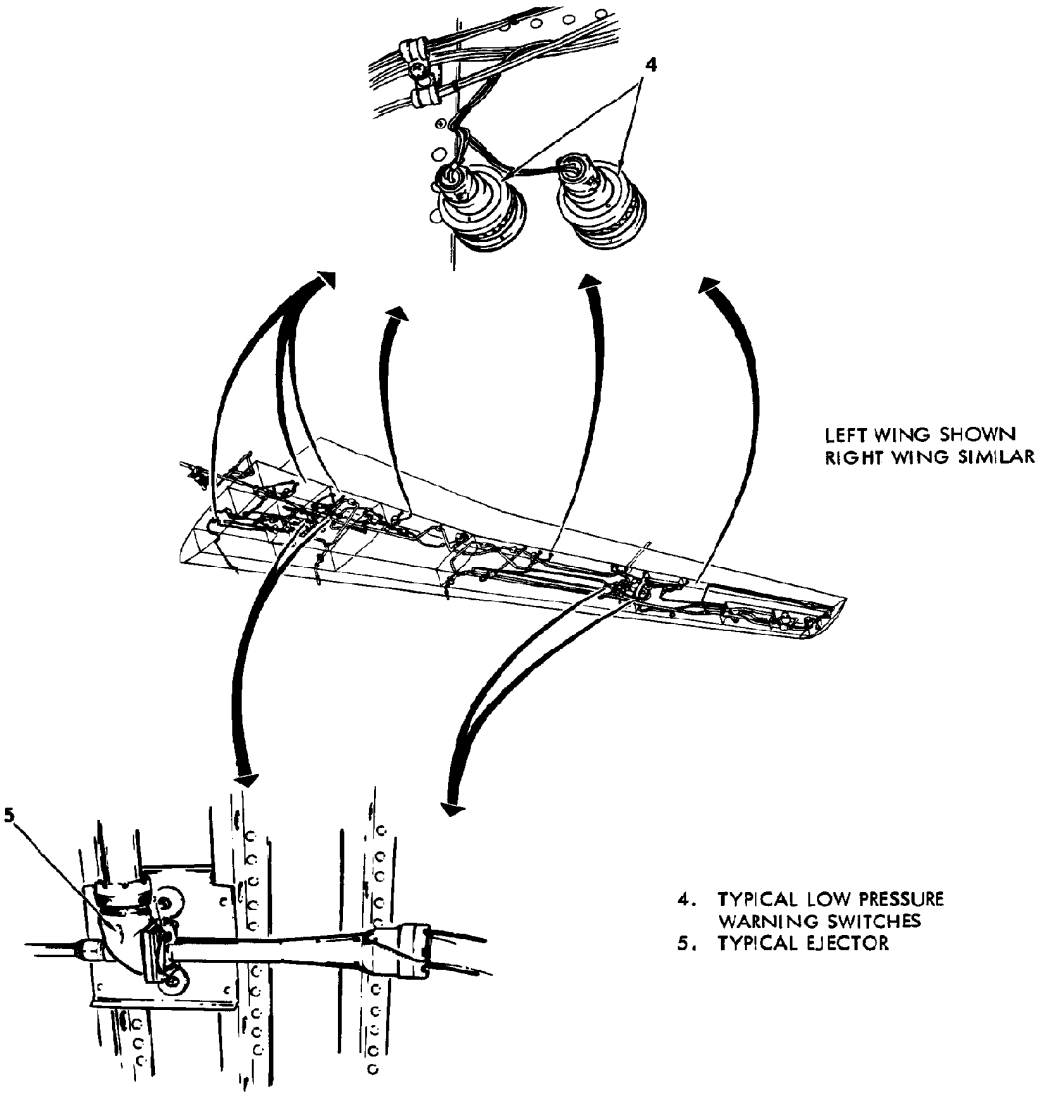

Distribution System Component Locations (Sheet 2 of 6)

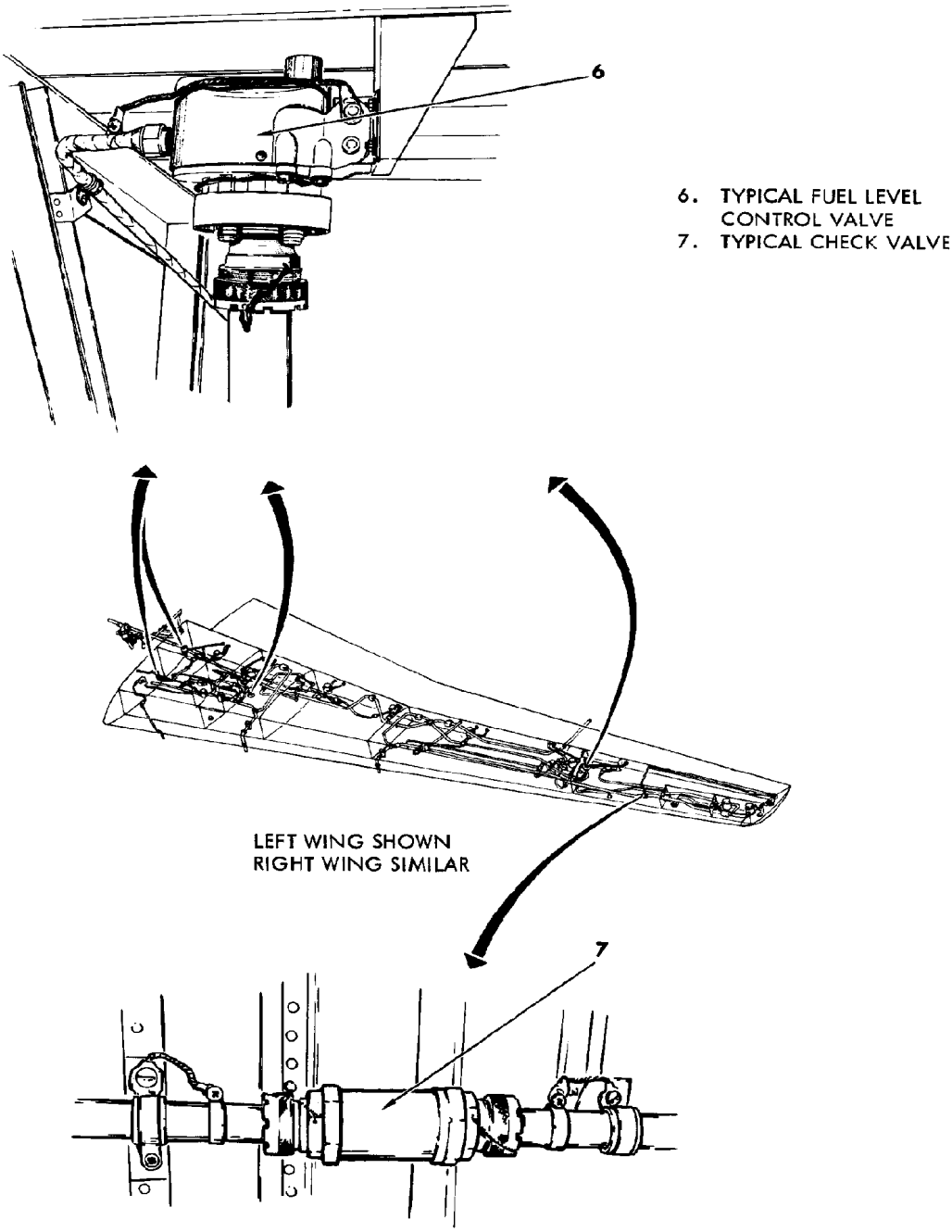

Distribution System Component Locations (Sheet 3 of 6)

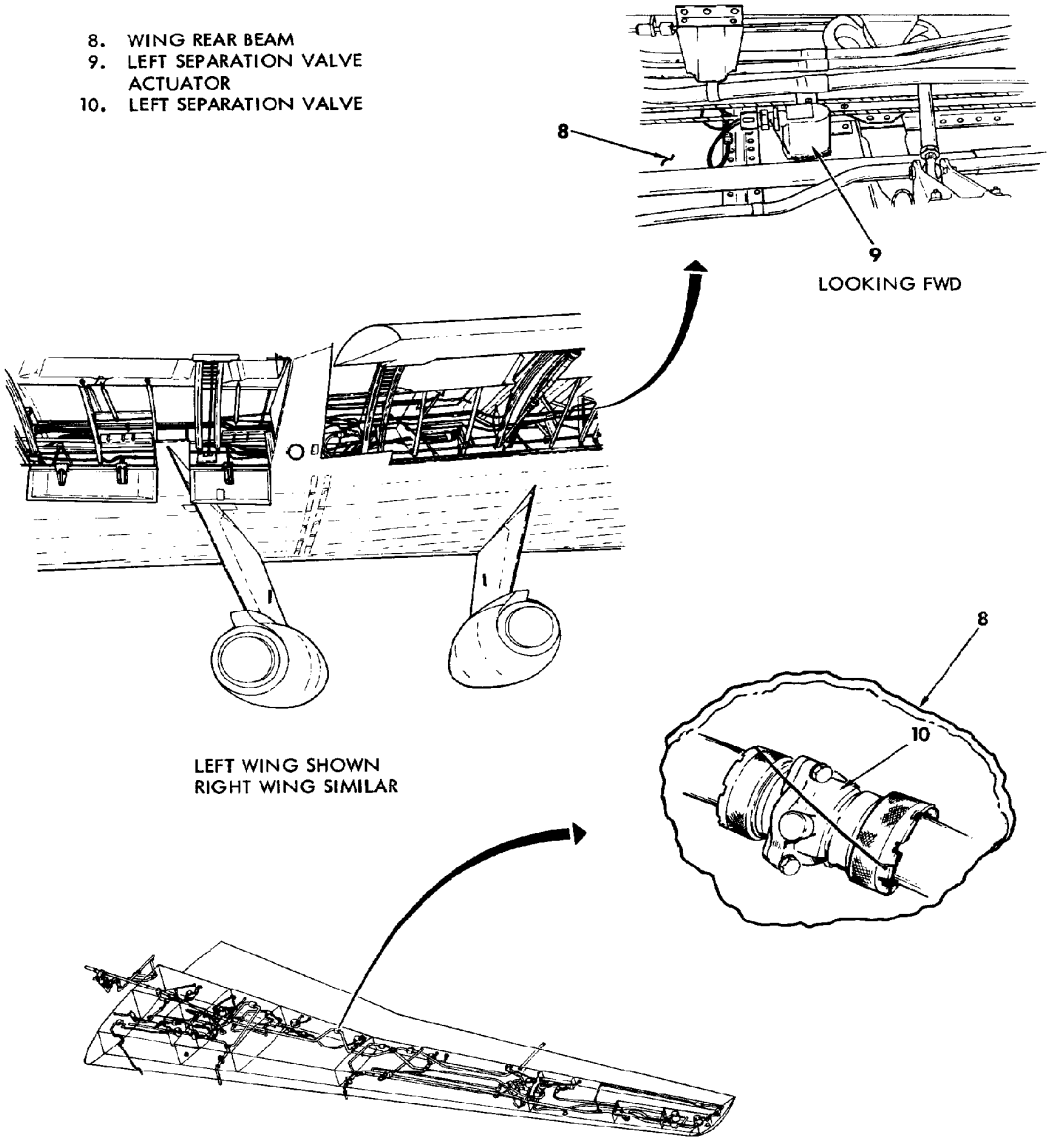

Distribution System Component Locations (Sheet 4 of 6)

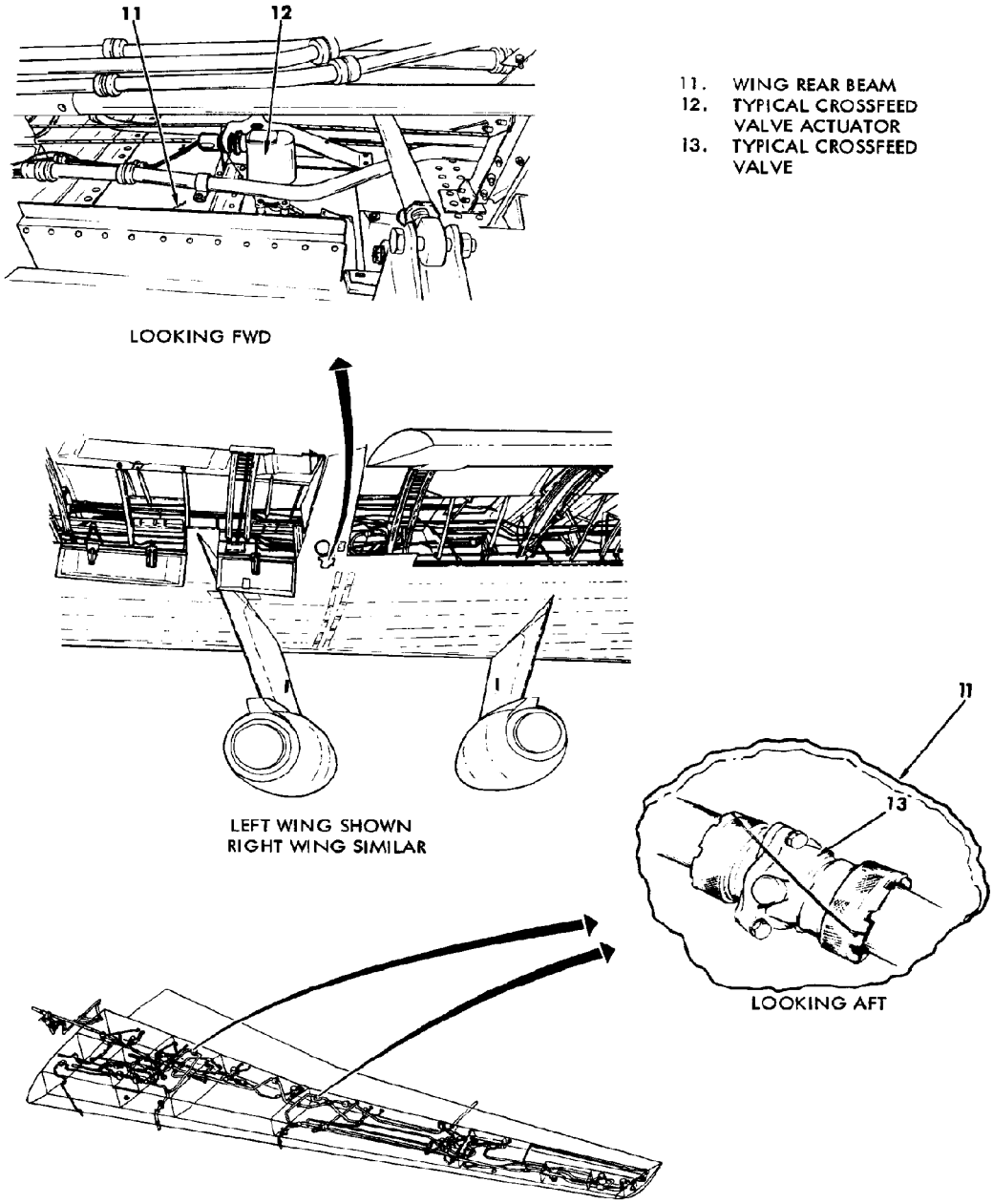

Distribution System Component Locations (Sheet 5 of 6)

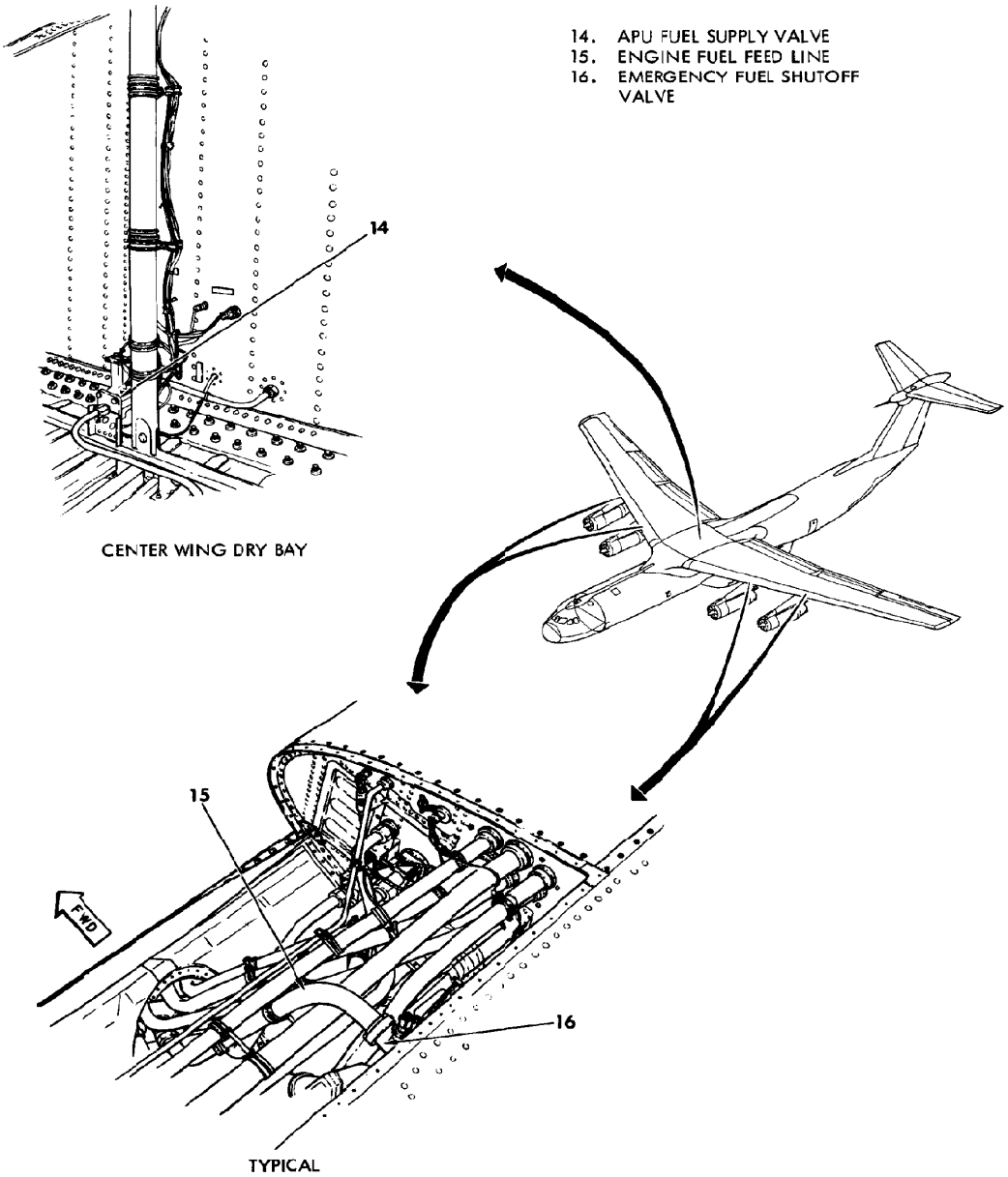

Distribution System Component Locations (Sheet 6 of 6)

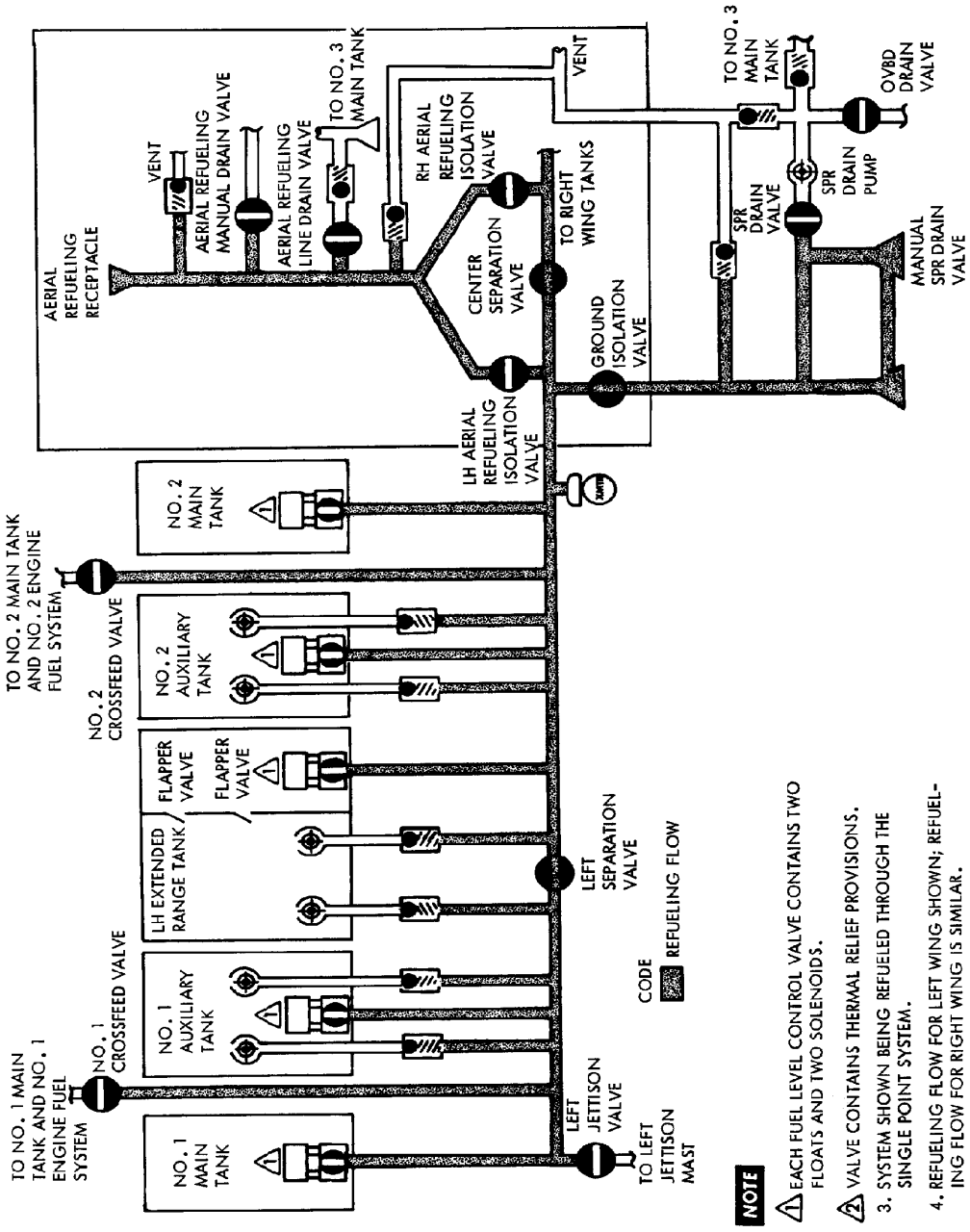

Refueling Flow Schematic Diagram

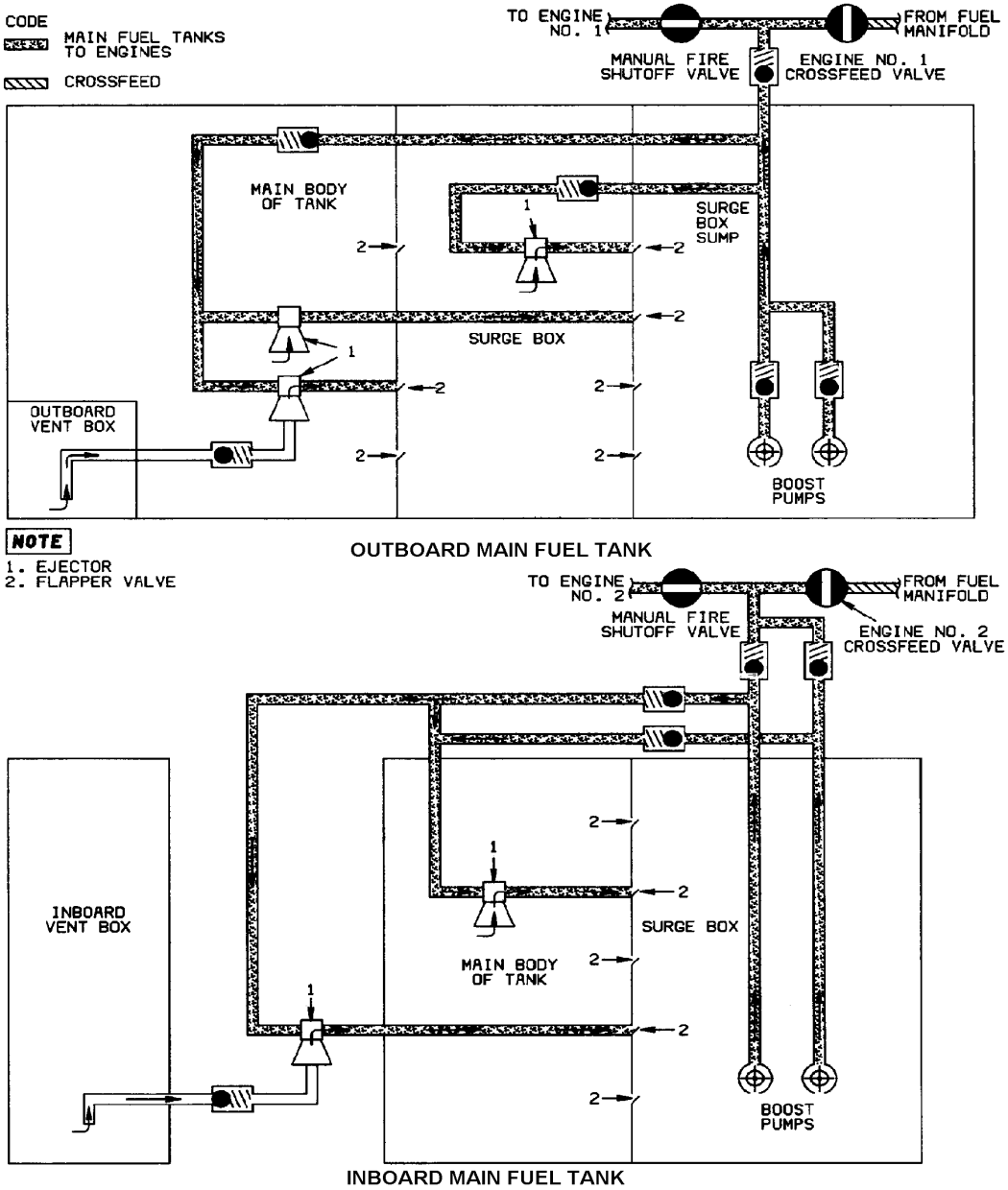

Main Fuel Tank Boost Pump Supply Schematic Diagrams

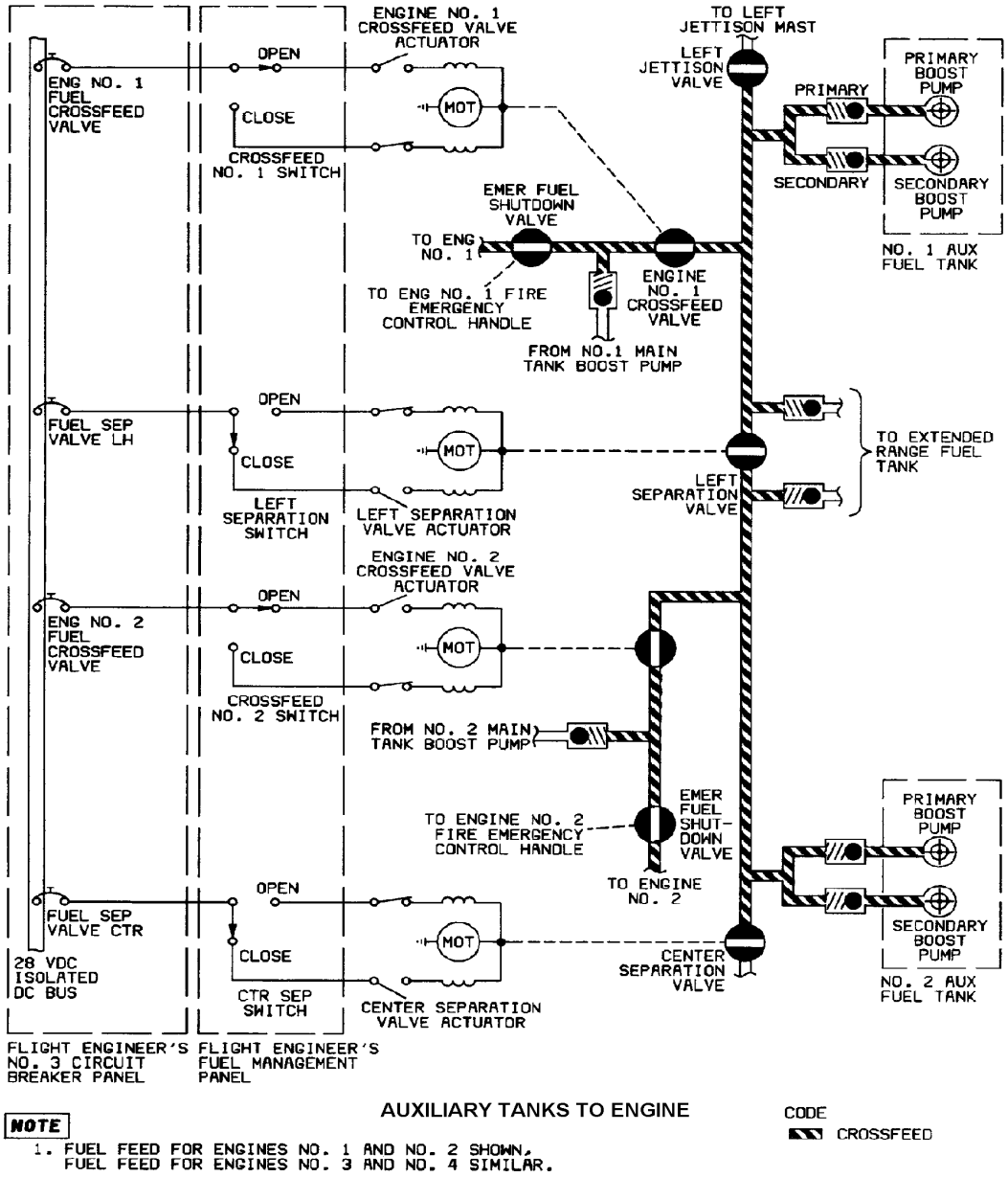

NOTE

1. FUEL FEED FOR ENGINES NO. 1 AND NO. 2 SHOWN, FUEL FEED FOR ENGINES NO. 3 AND NO. 4 SIMILAR.

Fuel Feed System Schematic Diagram (Sheet 1 of 2)

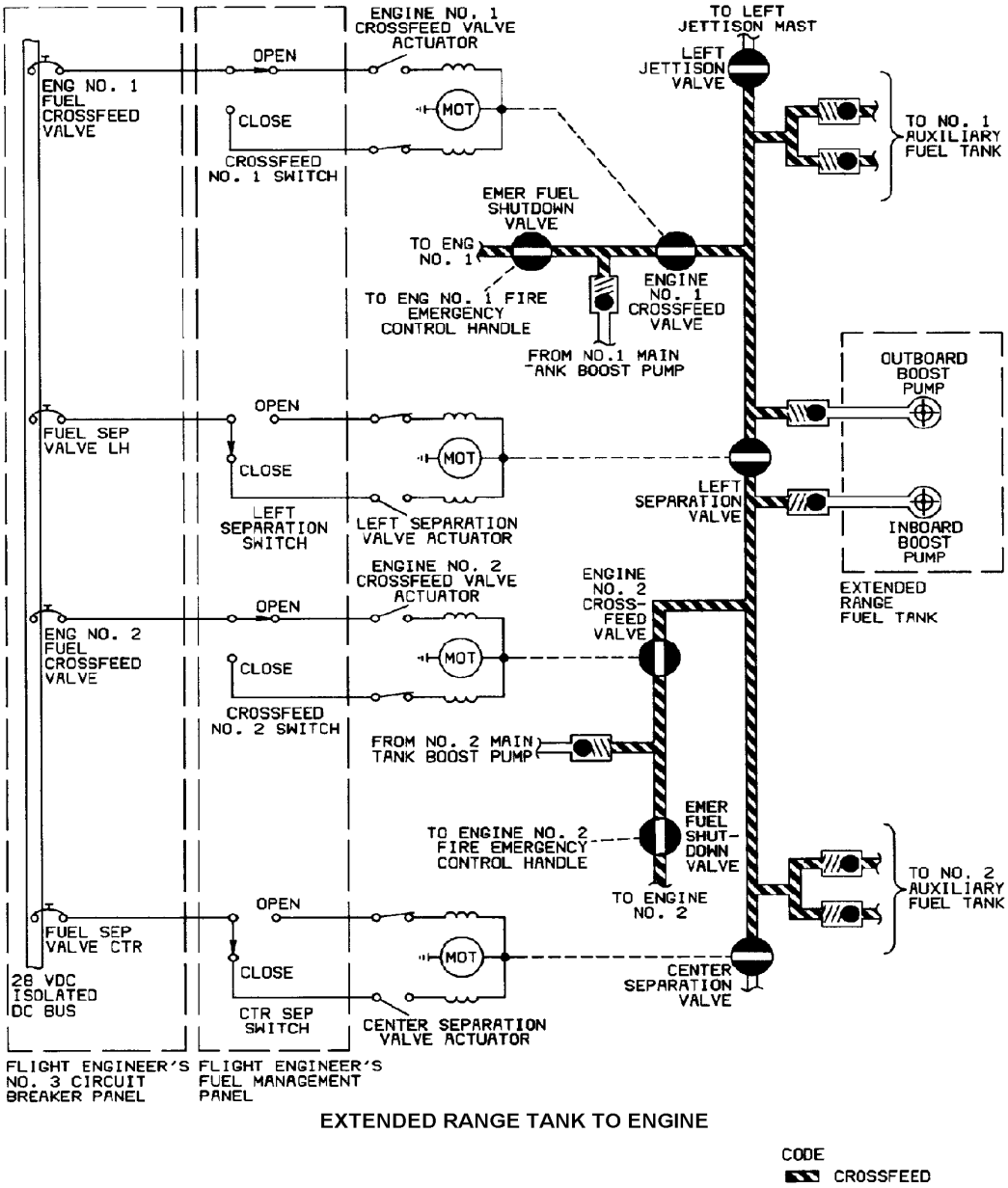

Fuel Feed System Schematic Diagram (Sheet 2 of 2)

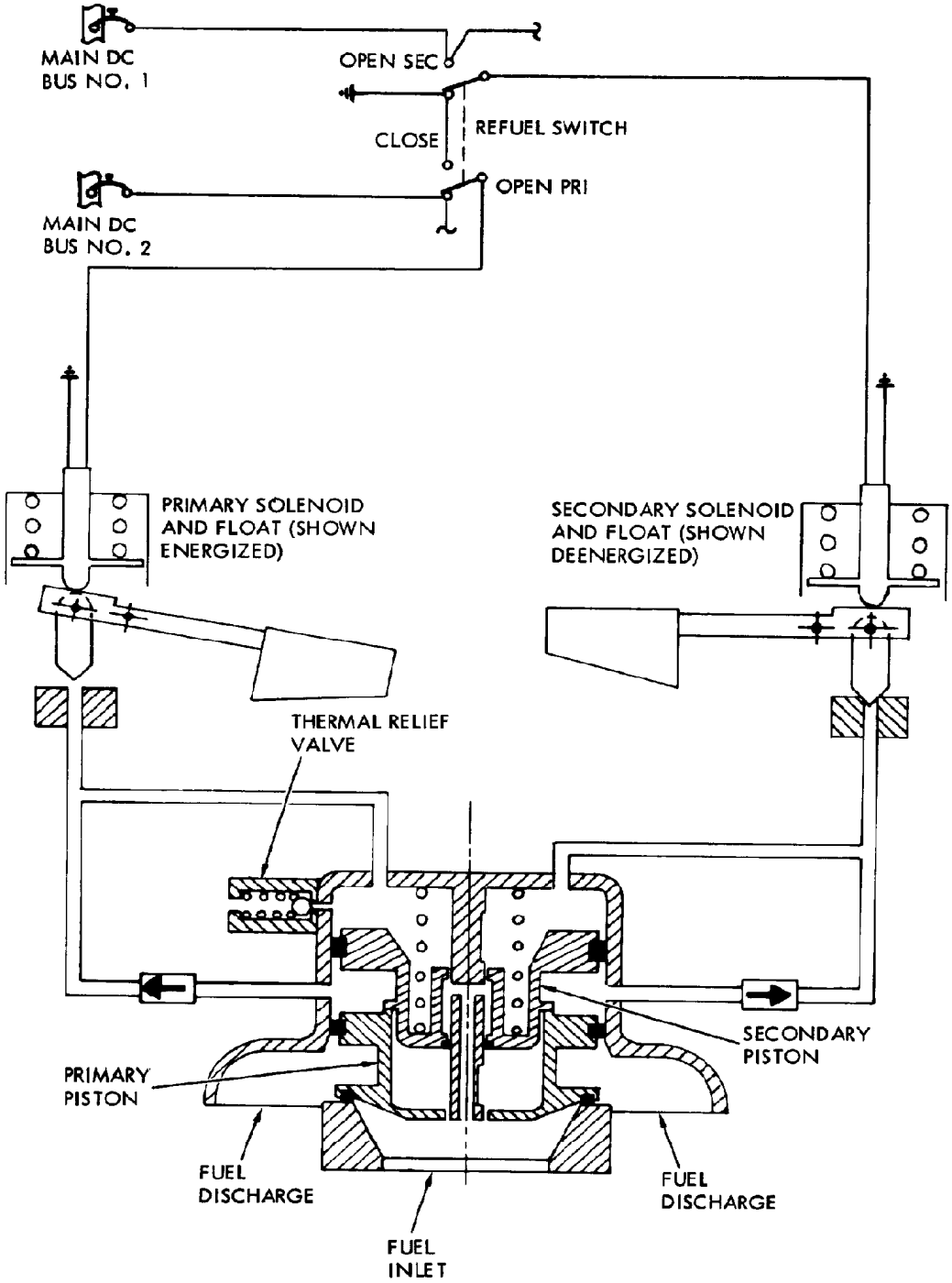

Typical Fuel Valve Schematic Diagram

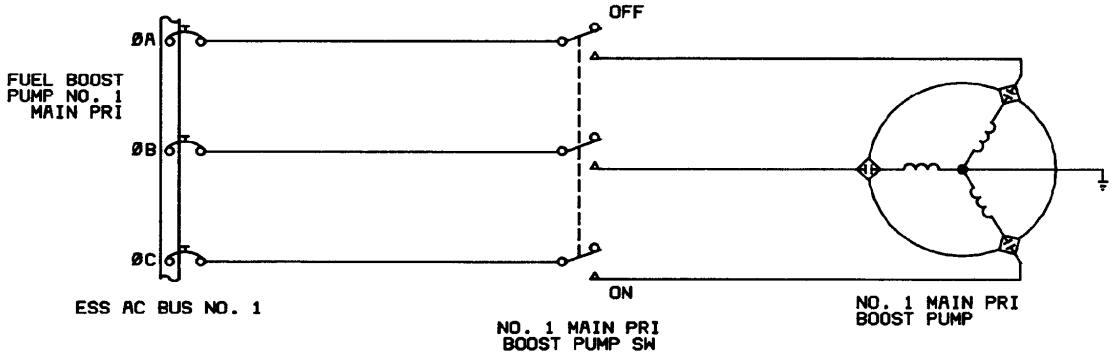

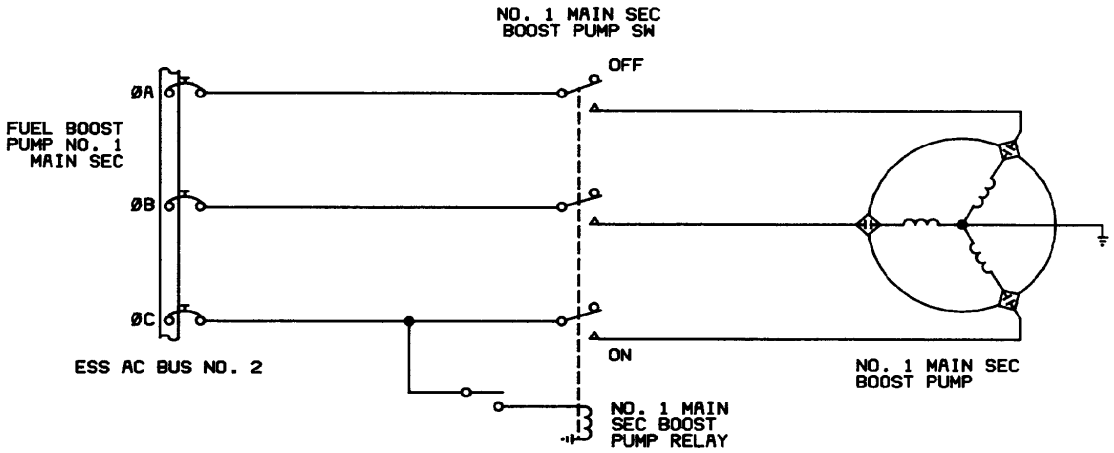

Main Boost Pump Electrical Schematic Diagram

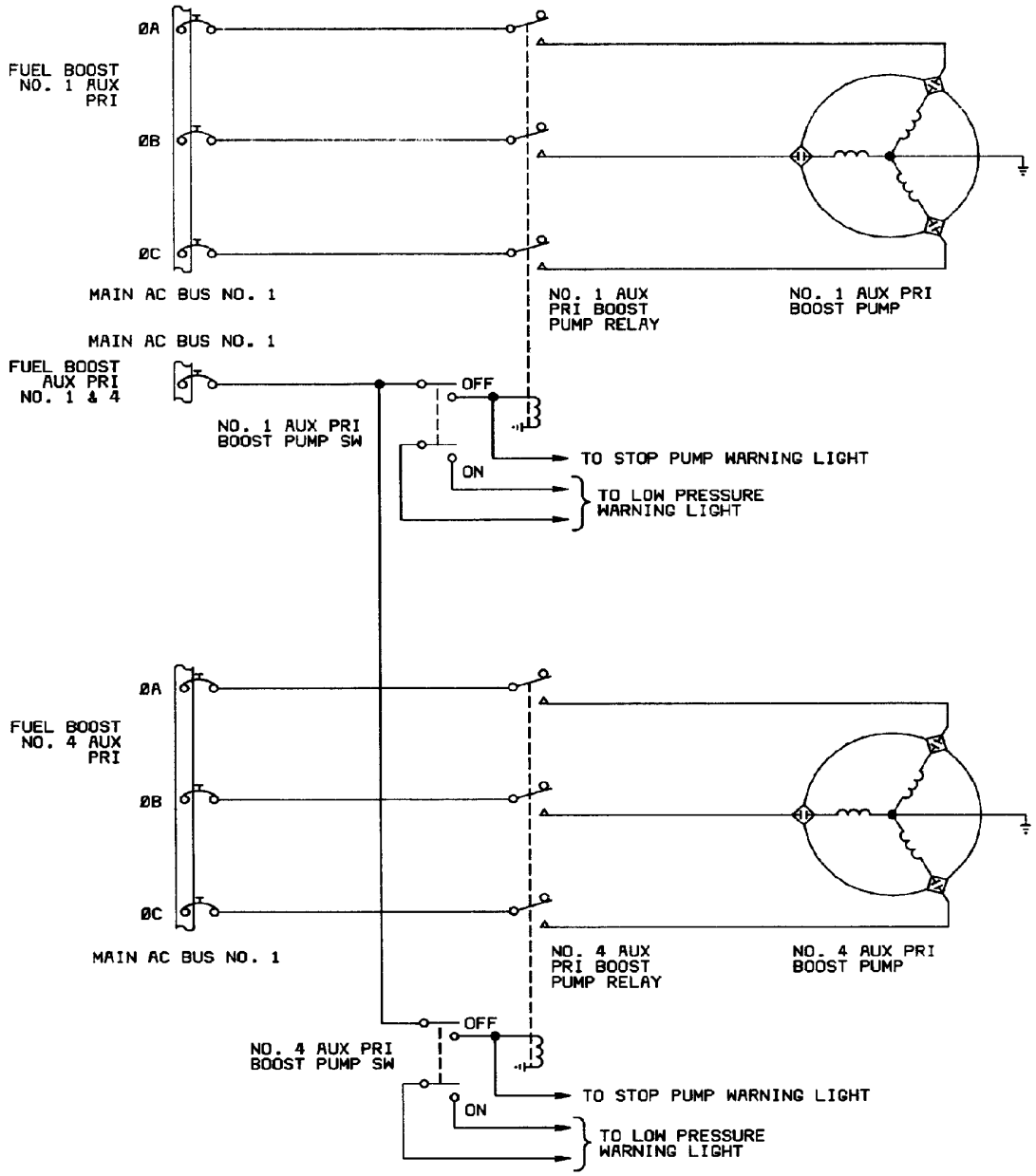

Auxiliary Boost Pump Electrical Schematic Diagram

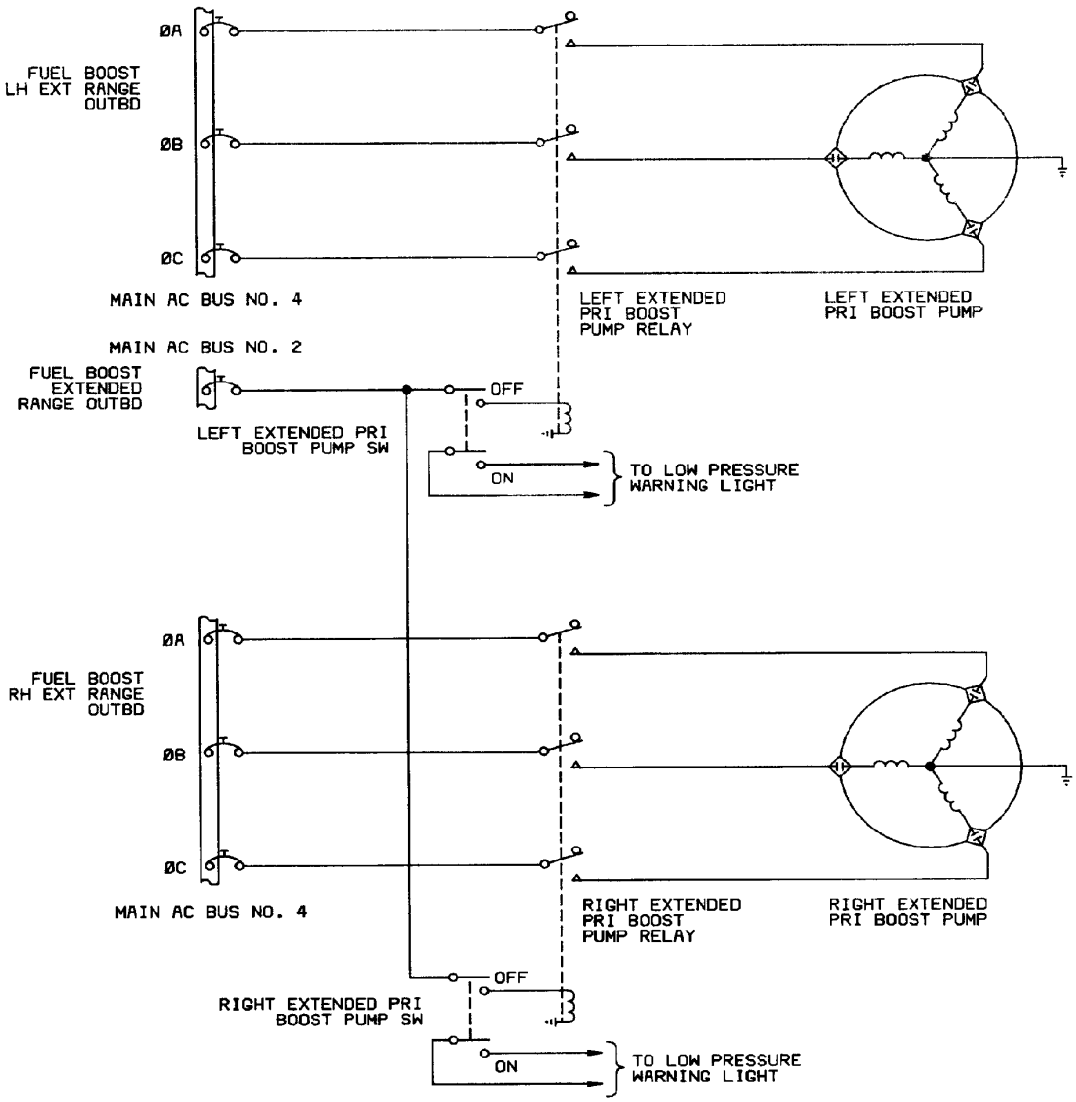

Extended Range Boost Pump Electrical Schematic Diagram

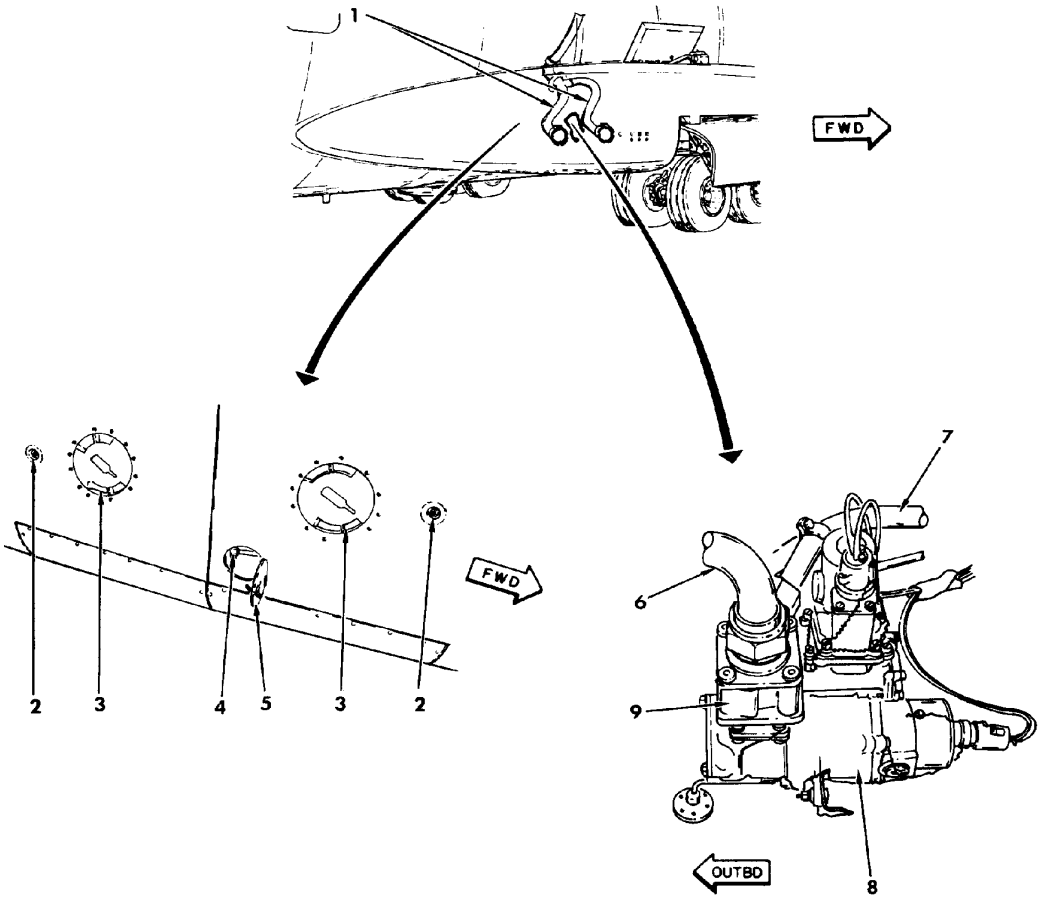

(LOOKING AFT)

1. REFUELING MANIFOLD
2. GROUND RECEPTACLE
3. SINGLE POINT REFUELING ADAPTER
4. SINGLE POINT REFUELING MANUAL DRAIN SHUTOFF VALVE
5. SINGLE POINT REFUELING MANUAL DRAIN SHUTOFF VALVE ACCESS DOOR
6. REFUELING MANIFOLD LINE
7. MAIN TANK NO. 3 LINE
8. SINGLE POINT REFUELING PUMP
9. SINGLE POINT REFUELING VALVE

Single-Point Refueling Component Locations (Sheet 1 of 2)

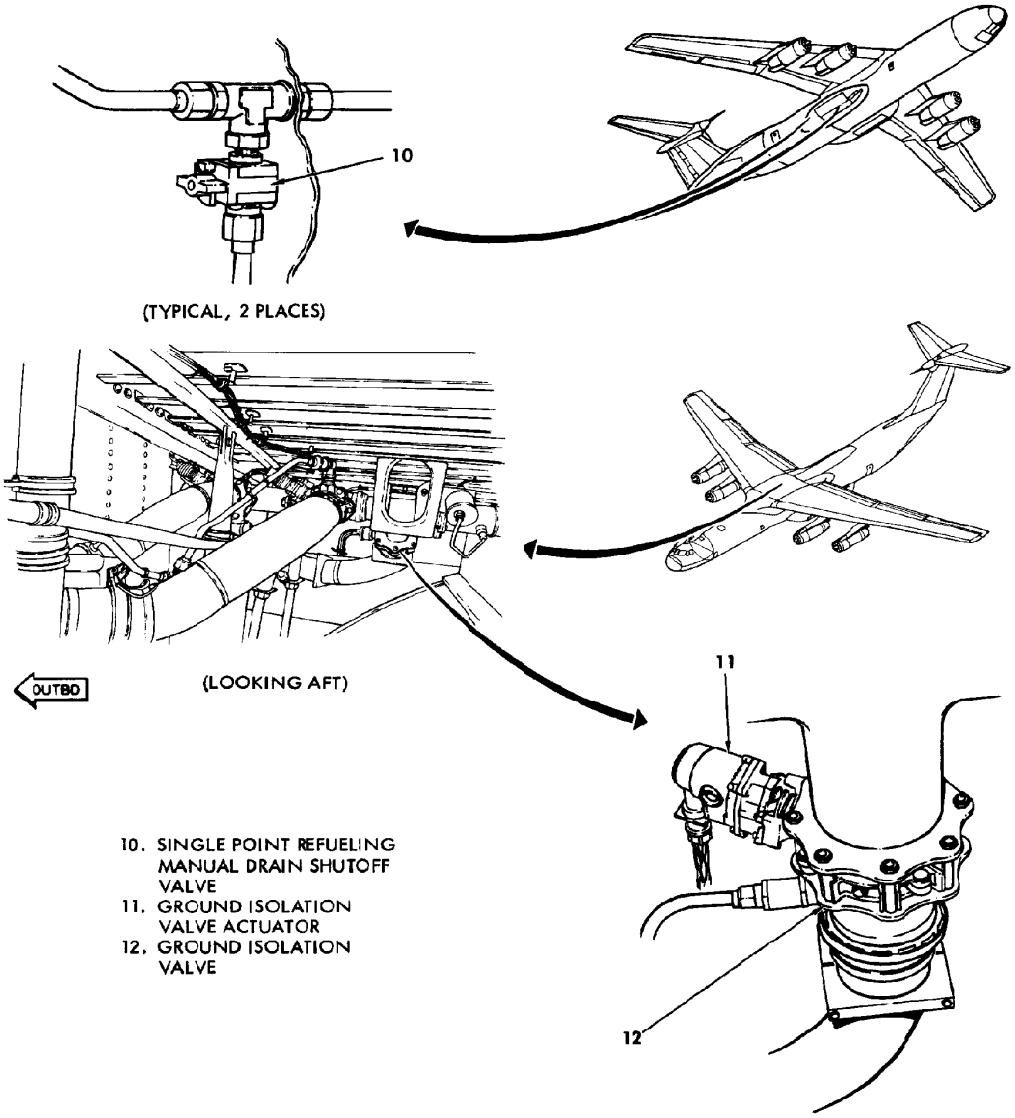

Single-Point Refueling Component Locations (Sheet 2 of 2)

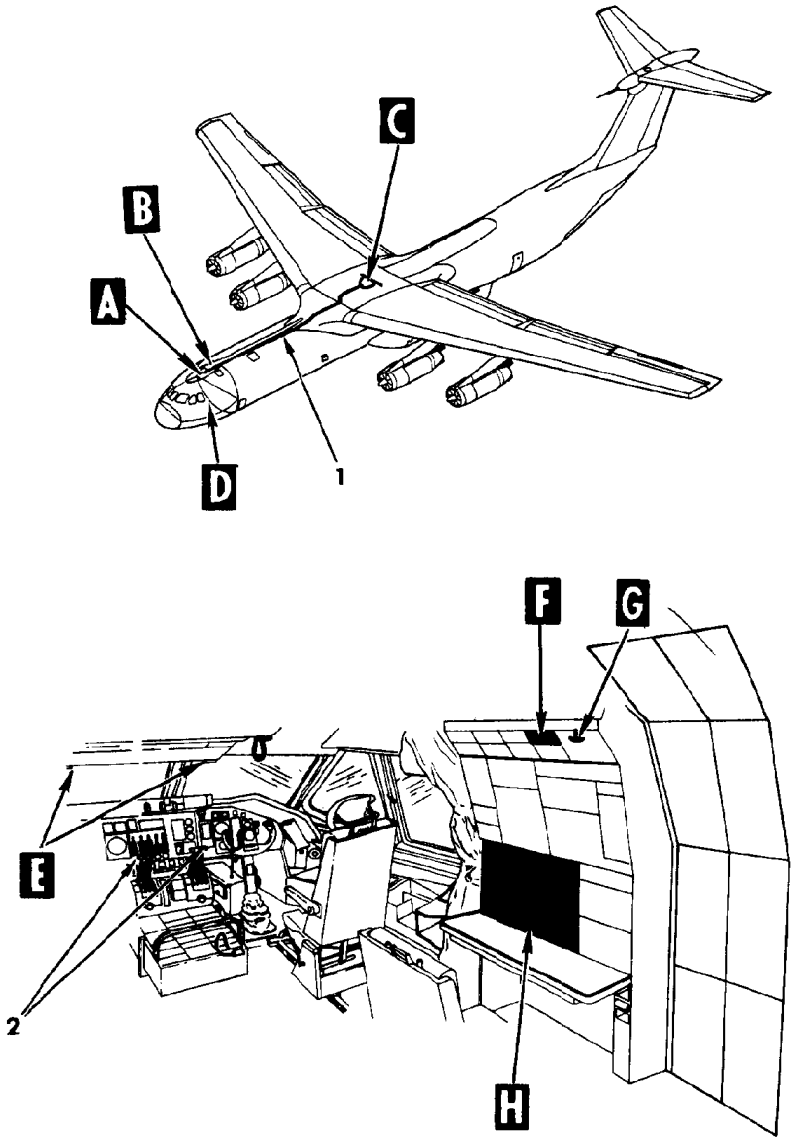

1. AERIAL REFUELING MANIFOLD
2. AERIAL REFUELING BOOM DISCONNECT SWITCHES

D

Aerial Refueling Component Locations (Sheet 1 of 4)

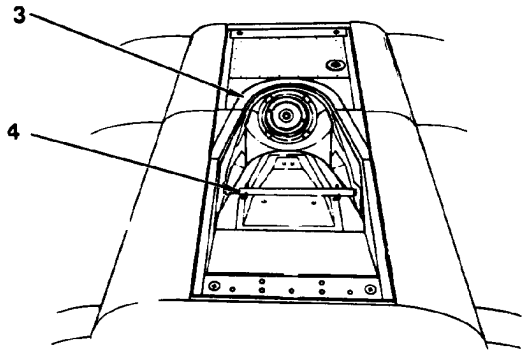

(LOOKING AFT)

A

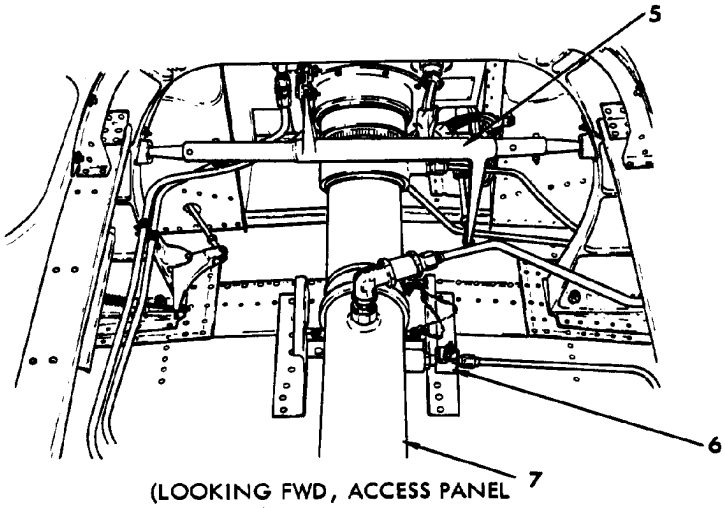

(LOOKING FWD, ACCESS PANEL REMOVED)

B

3. UARRSI RECEPTACLE
4. DOOR RETAINER ASSEMBLY
5. AERIAL REFUELING DOOR CONTROL BELLCRANK
6. AERIAL REFUELING MANIFOLD MANUAL DRAIN VALVE
7. AERIAL REFUELING MANIFOLD

Aerial Refueling Component Locations (Sheet 2 of 4)

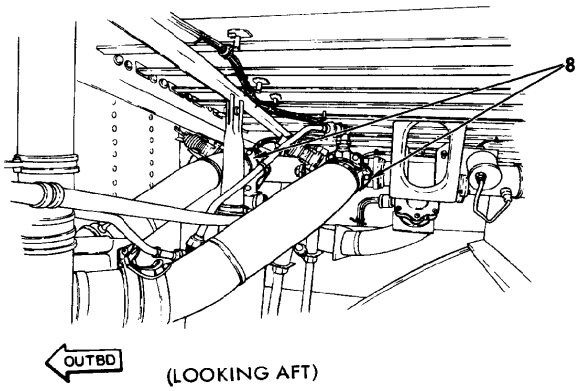

C

8. AERIAL REFUELING ISOLATION VALVES
9. PILOT'S AND COPILOT'S AERIAL REFUELING SYSTEM INDICATOR LIGHTS
10. AERIAL REFUELING DOOR CONTROL HANDLE
11. AERIAL REFUELING LIGHTS CONTROL PANEL

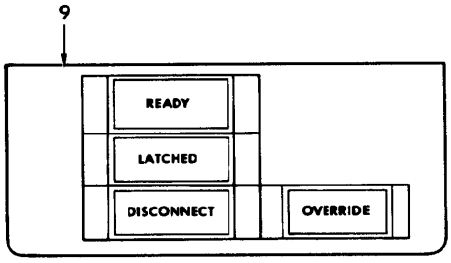

E

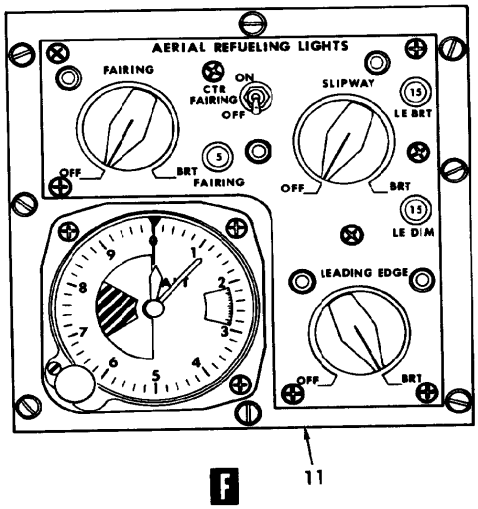

F

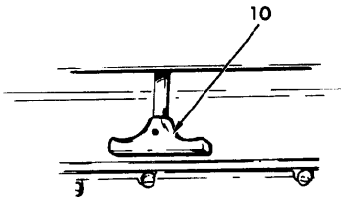

G

Aerial Refueling Component Locations (Sheet 3 of 4)

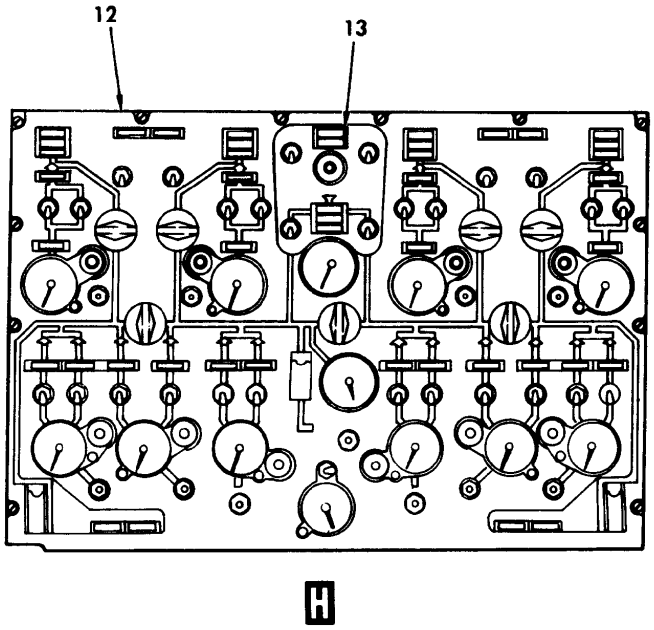

12. FLIGHT ENGINEER FUEL MANAGEMENT PANEL
13. AERIAL REFUELING CONTROLS AND INDICATORS

Aerial Refueling Component Locations (Sheet 4 of 4)

Jettison Subsystem

The fuel jettison system permits fuel to be jettisoned from a jettison mast in each wing so that airplane gross weight may be reduced. Normally, jettisoning fuel from the auxiliary and extended range tanks is required, such as in situations where airplane gross weight needs to be reduced to normal landing gross weight. However, system design allows fuel to be jettisoned from any or all fuel tanks in an emergency. Fuel can be jettisoned from the main tank after the fuel in the extended range and auxiliary tanks has been jettisoned. Jettisoning is accomplished by the fuel boost pumps pumping fuel into the wing fuel manifolds, through the separation and jettison valves, and out the jettison masts.

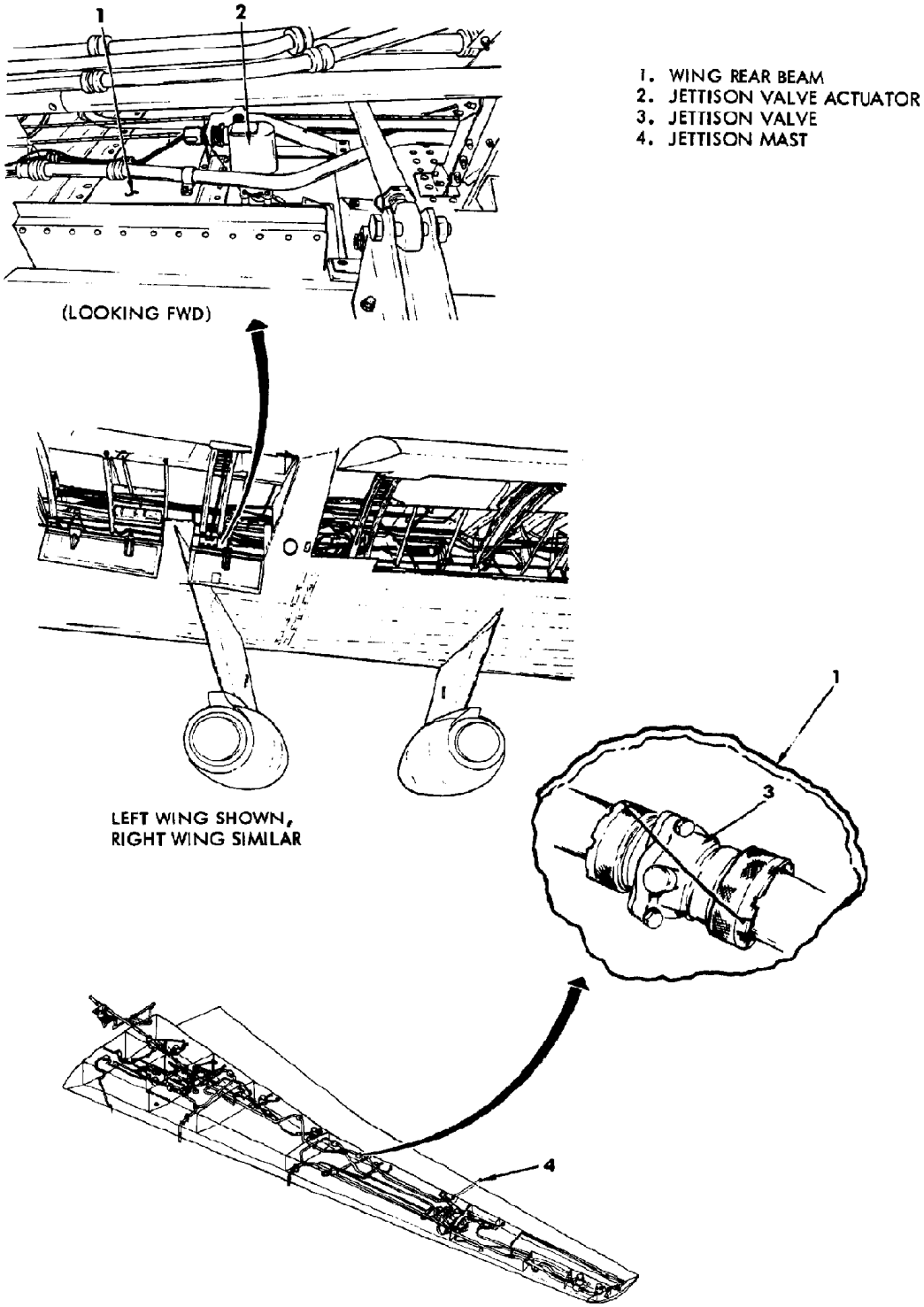

Jettison System Component Locations (Sheet 1 of 2)

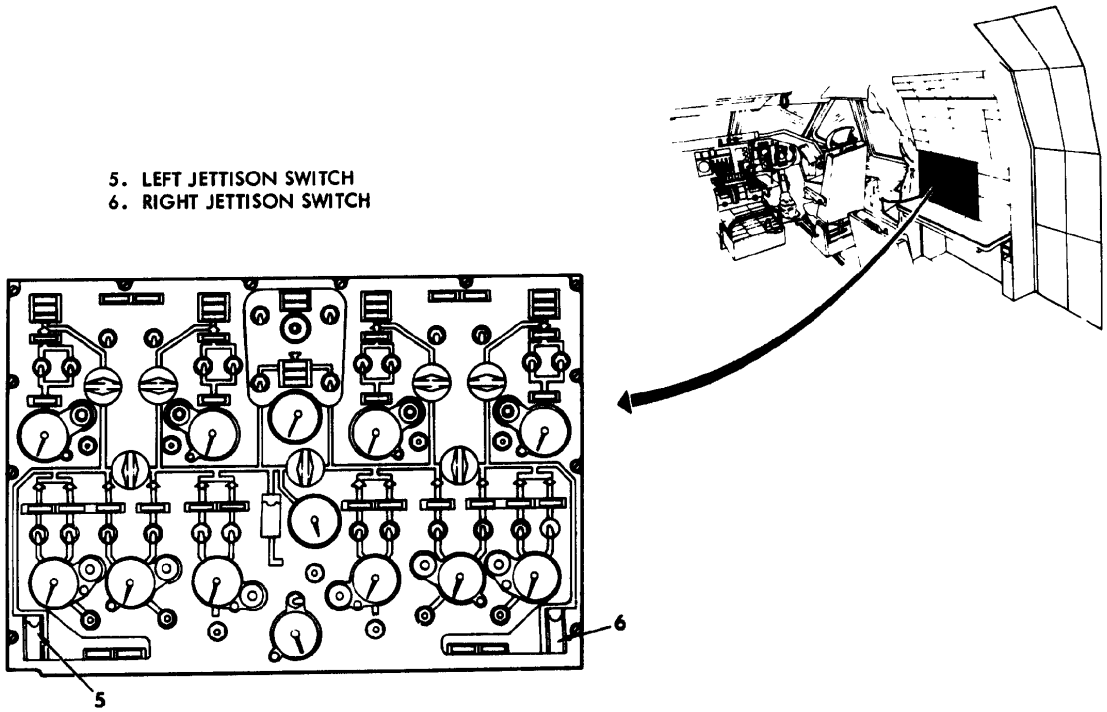

Jettison System Component Locations (Sheet 2 of 2)

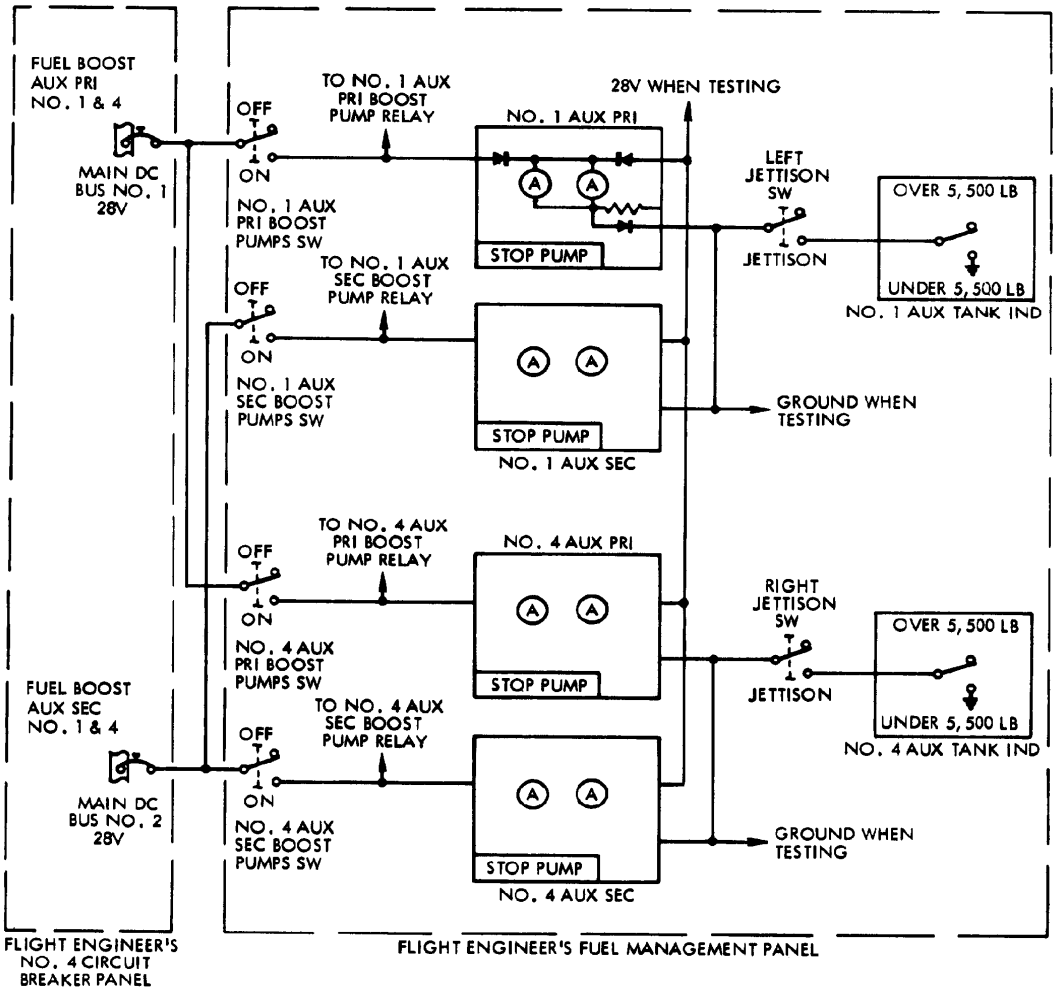

Fuel Jettison Warning Circuit Schematic Diagram

Indication and Warning Subsystem

Fuel system indication and warning are displayed on the fuel management panel. Systems displayed on the panel are fuel manifold pressure, low boost pump pressure, fuel temperature, fuel quantity, sump low warning, jettison warning, and aerial refueling warning.

Fuel manifold pressure is sensed through a transmitter mounted on the manifold in the center wing dry bay. A FUEL PRESS gage on the fuel management panel displays fuel pressure. A FUEL IN TEMP gage displays readings circuited from two temperature bulbs downstream of the emergency fuel shutdown valves on the front wing beam. The rear wing beam contains boost pump pressure switches which are circuited to PRESS LOW warning lights on the fuel management panel.

An individual fuel quantity system is provided for each tank. The quantity system measures available fuel, by weight, in each tank and also the total combined tank fuel amount. The fuel system displays fuel amounts, in pounds, on 11 fuel quantity indicators on the fuel management panel. Ten indicators register individual tank fuel amounts, and the 11th indicator displays total fuel amount. The indicators register data from the capacitor type tank units (or probes) and density compensators. The fuel quantity system consists of 68 tank units, 10 of which have a compensator unit. The compensators are usually submerged in fuel at all times and are designed to detect fuel density and temperature changes which affect fuel capacity. There are four thermistor sensing units, one in each main tank surge box. When main tank fuel level drops below the 50 percent volume level in the surge box, the thermistors sense the low fuel level which causes the applicable SUMP LOW light to come on. A warning light is located above each main tank fuel quantity indicator on the fuel management panel.

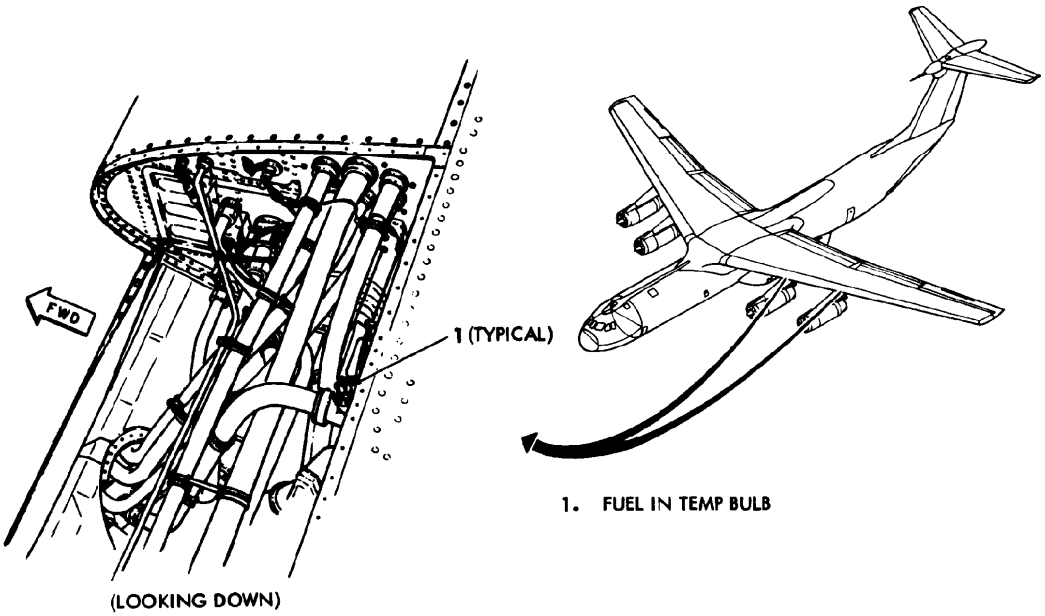

Indication System Component Locations

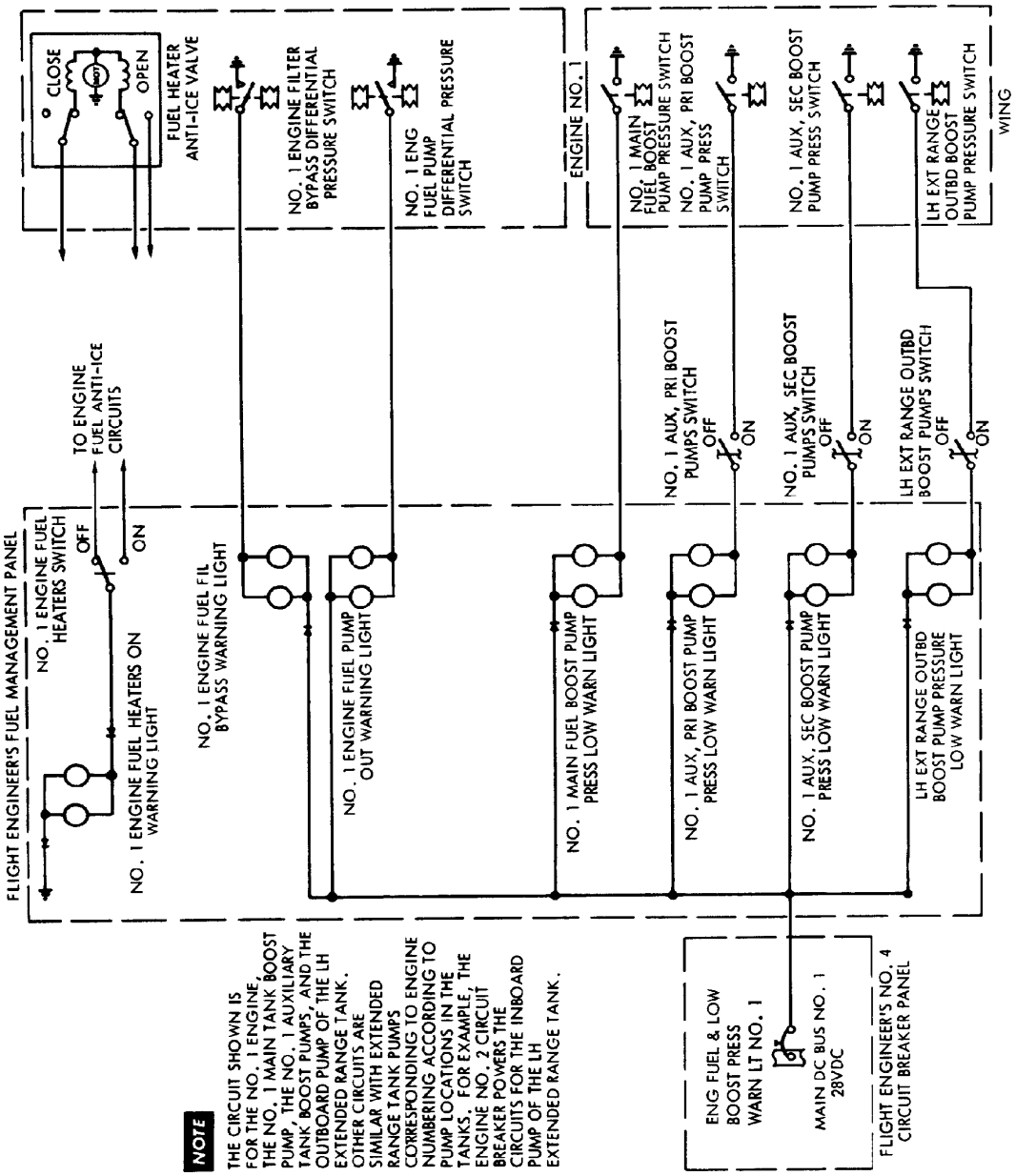

Fuel Warning System Schematic Diagram

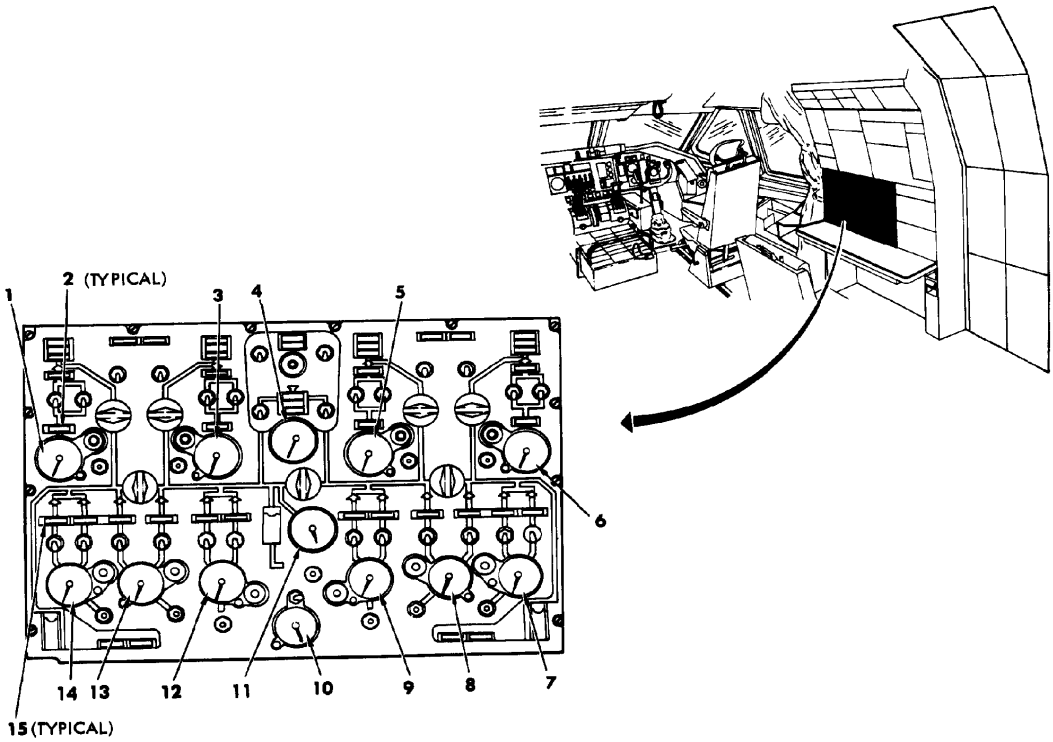

1. NO. 1 MAIN FUEL QUANTITY GAGE
2. SUMP LOW LIGHT
3. NO. 2 MAIN FUEL QUANTITY GAGE
4. TOTAL FUEL QUANTITY GAGE
5. NO. 3 MAIN FUEL QUANTITY GAGE
6. NO. 4 MAIN FUEL QUANTITY GAGE
7. NO. 4 AUX FUEL QUANTITY GAGE
8. RH EXT RANGE FUEL QUANTITY GAGE
9. NO. 3 AUX FUEL QUANTITY GAGE
10. FUEL IN TEMP GAGE
11. FUEL PRESS GAGE
12. NO. 2 AUX FUEL QUANTITY GAGE
13. LH EXT RANGE FUEL QUANTITY GAGE
14. NO. 1 AUX FUEL QUANTITY GAGE
15. PRESS LOW LIGHT

Indication and Quantity Systems Control Panel

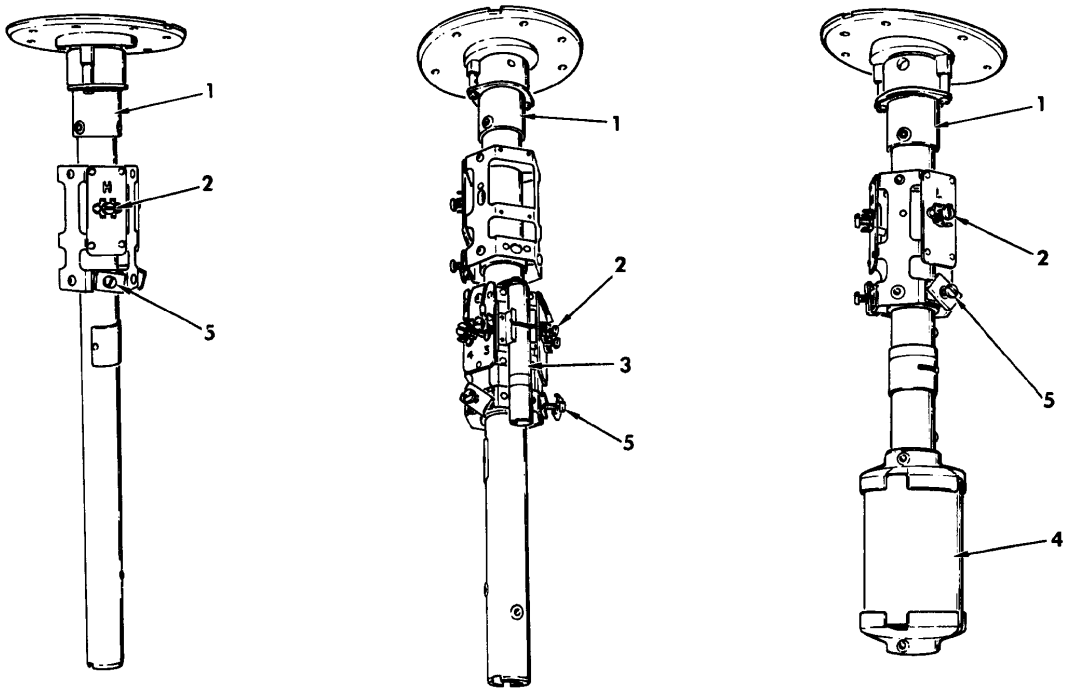

1. TYPICAL FUEL PROBE
2. ELECTRICAL WIRE TERMINAL
3. SUMP LOW THERMISTOR
4. COMPENSATOR UNIT
5. STRAIN RELIEF FERRULE

Typical Tank Units

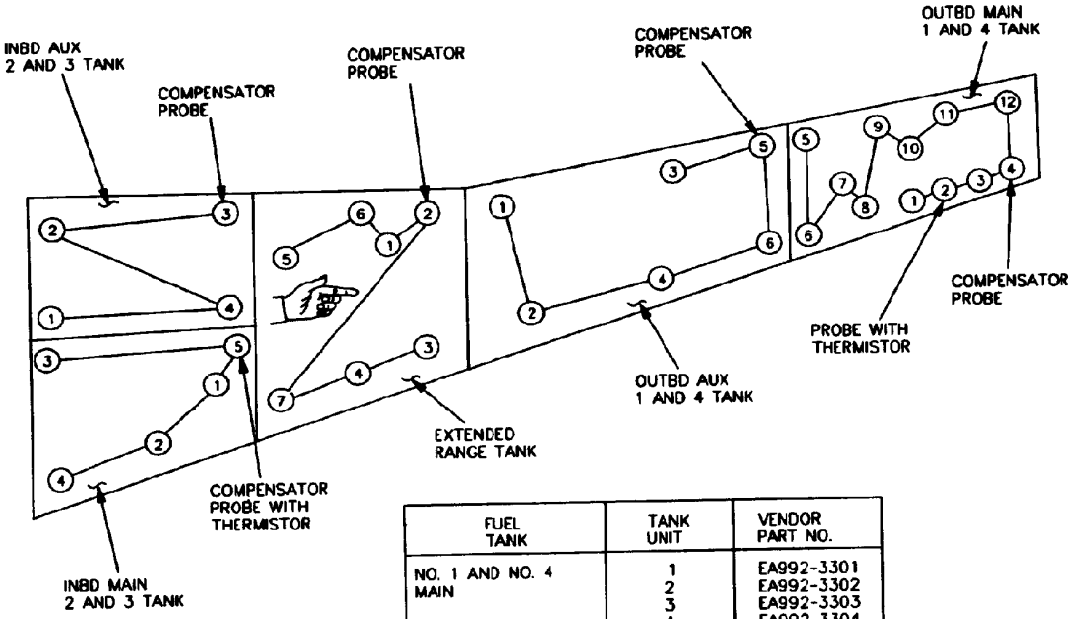

FUEL TANK	TANK UNIT	VENDOR PART NO.
NO. 1 AND NO. 4 MAIN	1	EA992-3301
	2	EA992-3302
	3	EA992-3303
	4	EA992-3304
	5	EA992-3305
	6	EA992-3306
	7	EA992-3307
	8	EA992-3308
	9	EA992-3309
	10	EA992-3310
	11	EA992-3311
	12	EA992-3312
NO. 2 AND NO. 3 MAIN	1	EA992-3321
	2	EA992-3322
	3	EA992-3323
	4	EA992-3024
	5	EA993-3325
NO. 1 AND NO. 4 AUXILIARY	1	EA992-3041
	2	EA992-3042
	3	EA992-3043
	4	EA992-3044
	5	EA993-3045
	6	EA992-3046
NO. 2 AND NO. 3 AUXILIARY	1	EA992-3031
	2	EA992-3037
	3	EA993-3038
	4	EA992-3039
RIGHT AND LEFT EXTENDED RANGE	1	EA992-3051
	2	EA993-3052
	3	EA992-3053
	4	EA992-3054
	5	EA992-3055
	6	EA992-3056
	7	EA992-3057

Tank Unit Locations

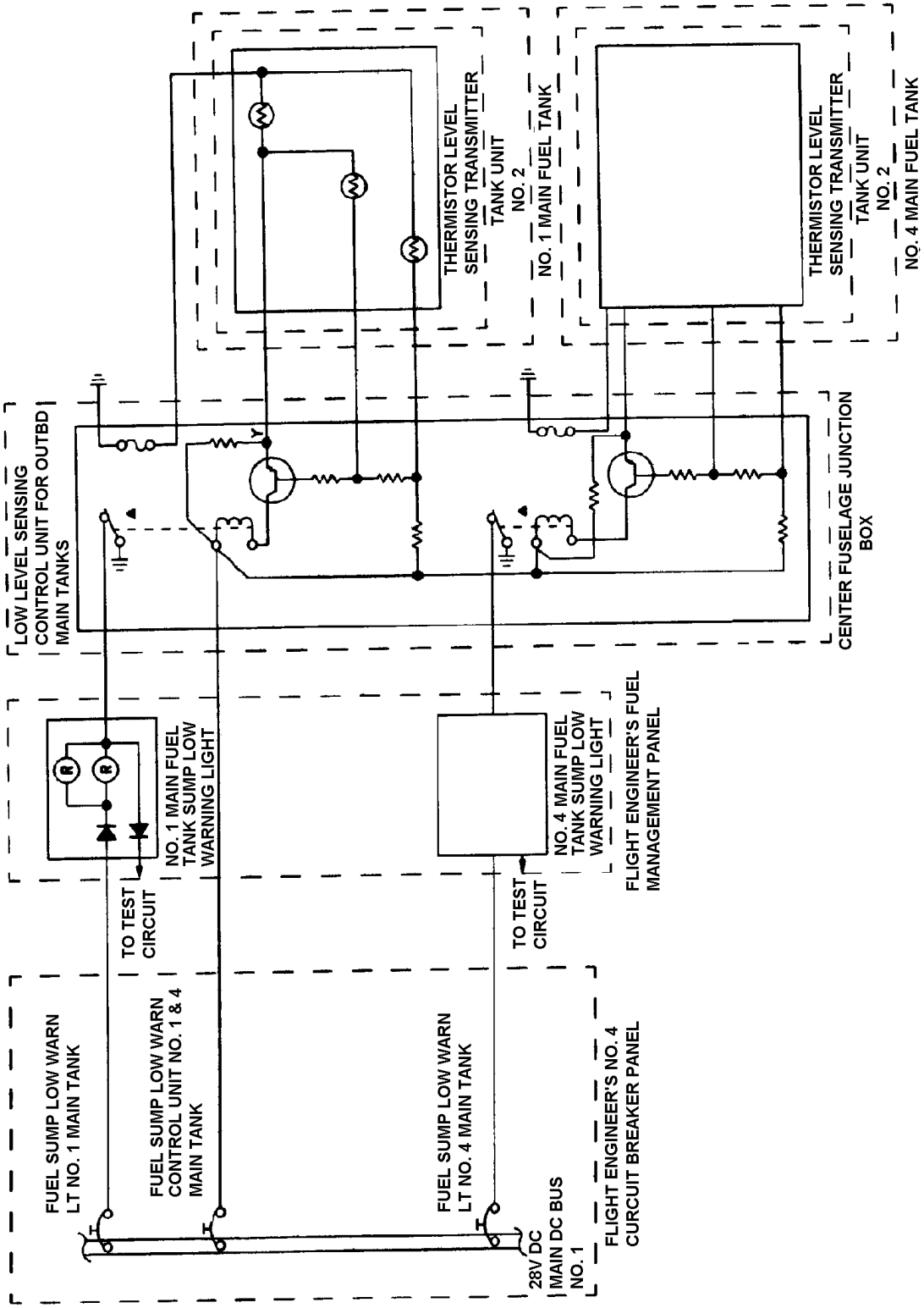

Sump Low Warning System Schematic Diagram

HYDRAULIC SYSTEM

General Description

The airplane uses three separate and independent 3000 psi hydraulic systems: hydraulic system No. 1, hydraulic system No. 2, and hydraulic system No. 3. Most components are in service centers in the cargo compartment. Each system provides power to other airplane systems. A 1200 psi hydraulic system No. 4 is used for nose landing gear (NLG) emergency extension. See T.O. lC-141B-2-32GS-00-1 for a complete description of hydraulic system No. 4.

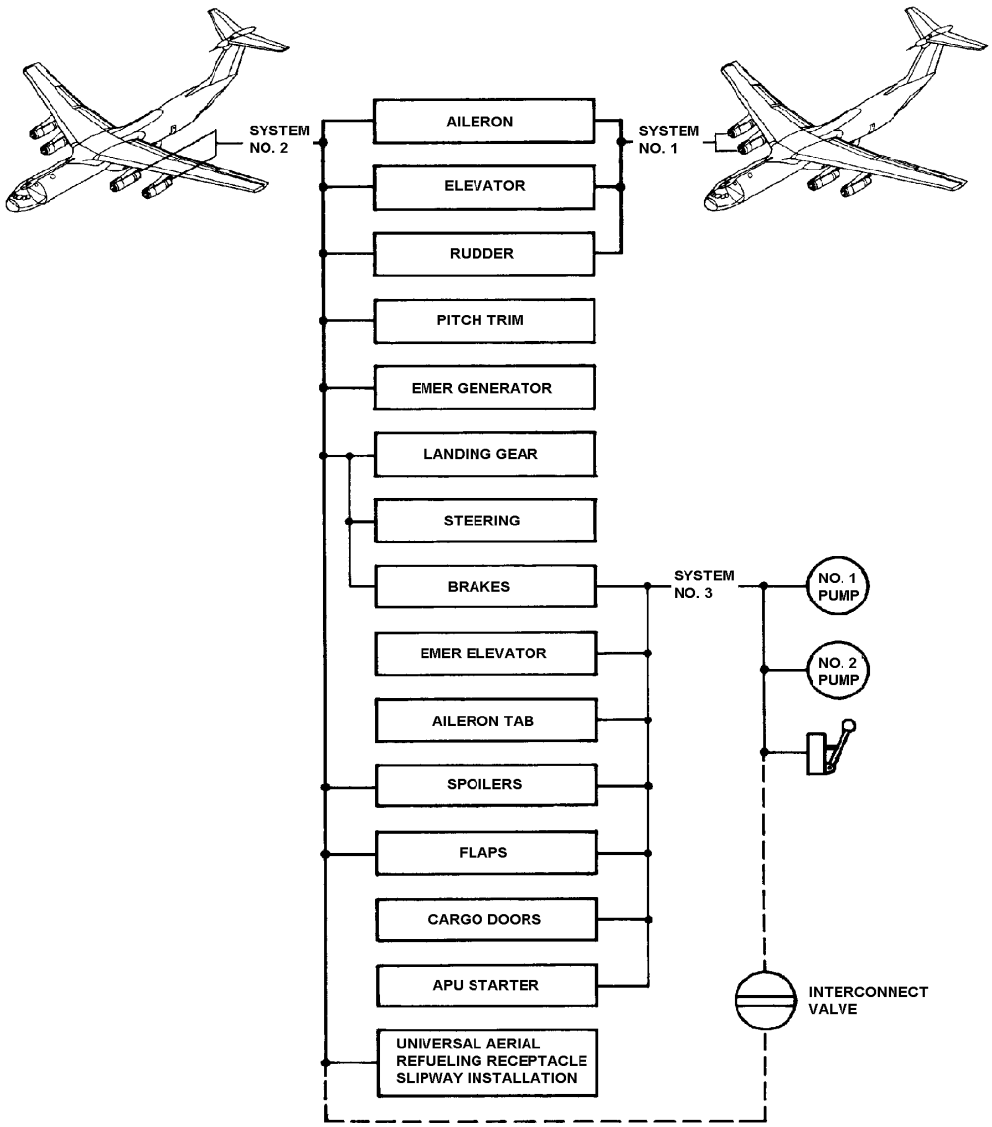

Flow Diagram of Hydraulic System

Hydraulic System No. 1

System No. 1 is powered by two variable-volume hydraulic pumps. They are connected in parallel and driven by engines No. 3 and No. 4. The only function of system No. 1 is to supply power to one of the two aileron power control unit cylinders, to one of the two rudder power control unit cylinders, and to one of the three elevator power control unit cylinders. The reservoir and most components are in a service center on the right side of the cargo compartment. No provisions are made for interconnecting system No. 1 with any other system. Ground test connections in the forward end of the right main landing gear (MLG) wheel well enable a test stand to be connected for ground testing the flight controls. The hydraulic system is operated from a hydraulic control panel at the flight engineer's station. This panel includes an ENG VALVES switch for each engine, one SUCT BOOST PUMP switch, three PRESS LOW lights, and a hydraulic pressure gauge. An electrically-driven boost pump ensures an adequate fluid supply to the suction side of the engine-driven pumps. System pressure is normally limited to 3000 psi by the engine-driven pumps. Should this feature on one or both pumps fail, system pressure would be limited to approximately 3650 psi by a system relief valve. An electrically-operated, gate-type shutoff valve in the suction line and a solenoid controlled shutoff valve in the pressure line for each of the engine-driven pumps allow isolation of an individual pump. These valves may be controlled by switches on the hydraulic control panel or by the appropriate FIRE PULL handle. Lights on the hydraulic control panel provide a warning of pump failure or loss of system pressure.

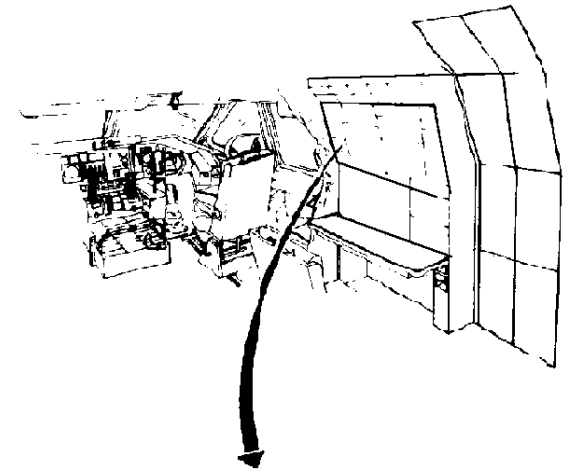

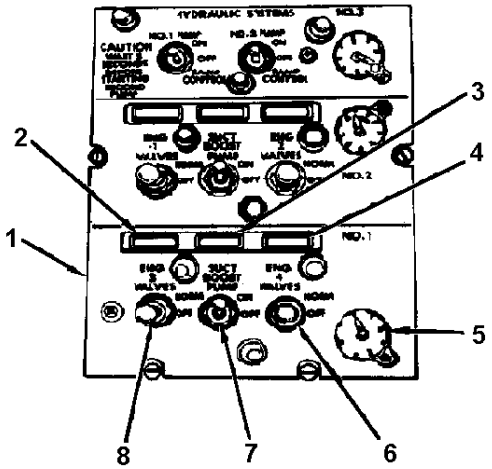

1. HYD SYS NO. 1 CONTROL PANEL
2. ENG NO. 3 PUMP PRESS LOW LIGHT
3. SUCTION BOOST PUMP PRESS LOW LIGHT
4. ENG NO. 4 PUMP PRESS LOW LIGHT
5. PRESSURE INDICATOR
6. ENG NO. 4 VALVES SWITCH
7. SUCT BOOST PUMP SWITCH
8. ENG NO. 3 VALVES SWITCH

Hydraulic System No. 1 Controls

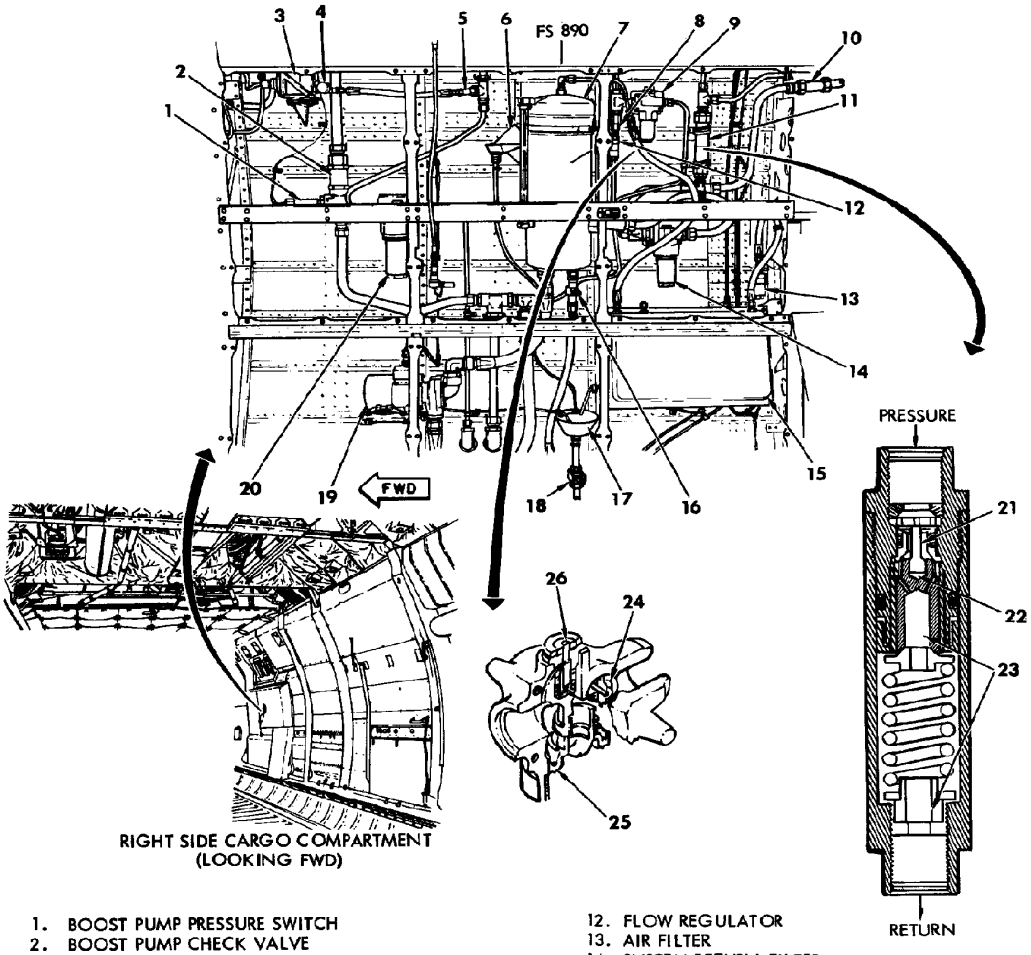

1. BOOST PUMP PRESSURE SWITCH
2. BOOST PUMP CHECK VALVE
3. PRESSURE TRANSMITTER
4. DIRECT READING PRESSURE GAGE
5. SNUBBER VALVE
6. RESERVOIR FILLER NECK
7. RESERVOIR
8. CHECK VALVE (BOOST PUMP RUN-AROUND CIRCUIT)
9. CASE DRAIN FILTER
10. RETURN CHECK VALVE
11. SYSTEM RELIEF VALVE
12. FLOW REGULATOR
13. AIR FILTER
14. SYSTEM RETURN FILTER
15. OVERFLOW TANK ASSEMBLY
16. RESERVOIR MANUAL DRAIN VALVE
17. SCUPPER
18. SCUPPER MANUAL DRAIN VALVE
19. SUCTION BOOST PUMP
20. EXTERNAL CONNECTION FILTER
21. PROBE
22. BUFFER AREA
23. POPPET
24. BYPASS
25. CHECK VALVE
26. CLOGGED FILTER INDICATOR BUTTON

Hydraulic System No. 1 Service Center Components

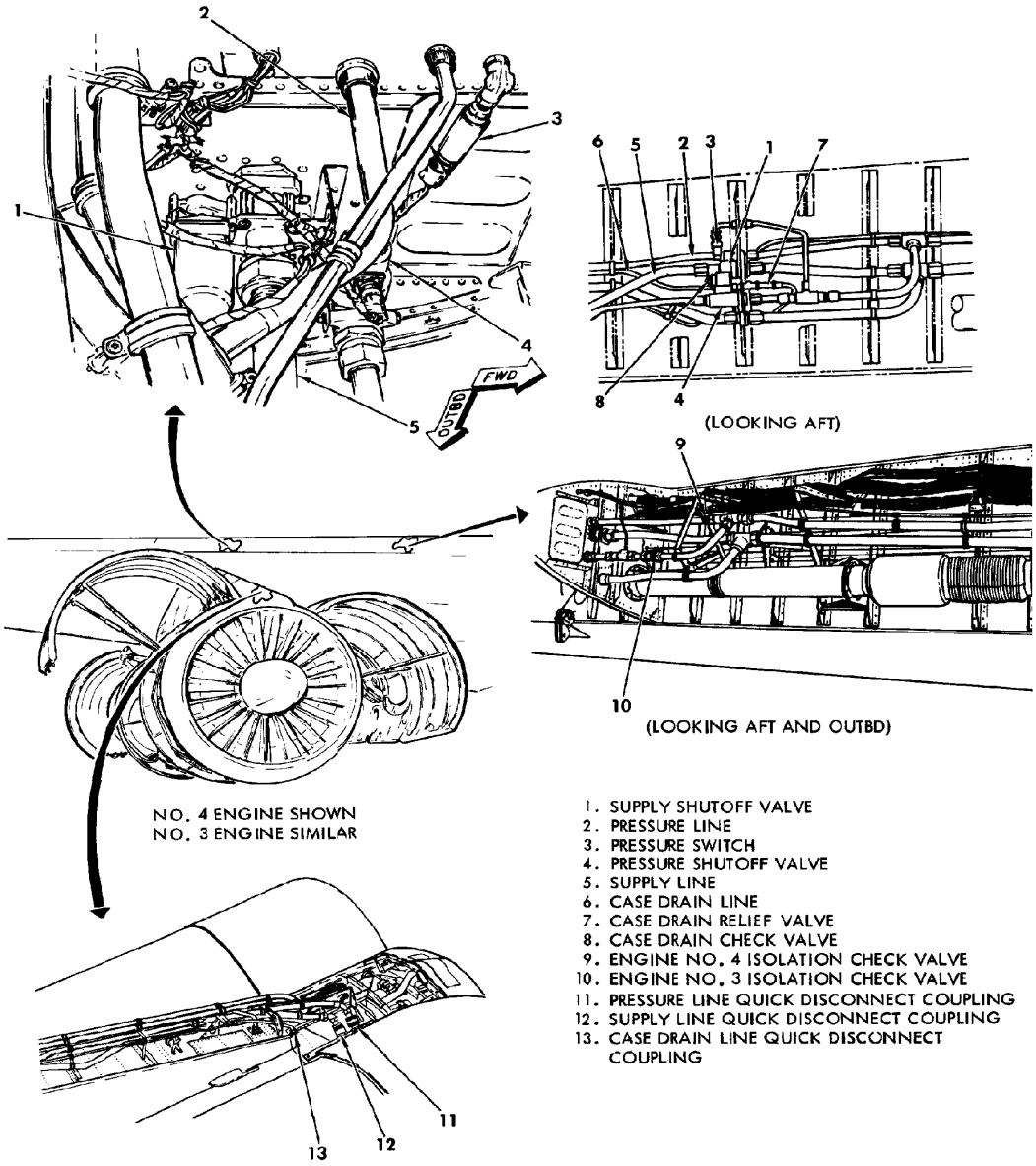

Right Wing and Pylon Hydraulic System No. 1 Components

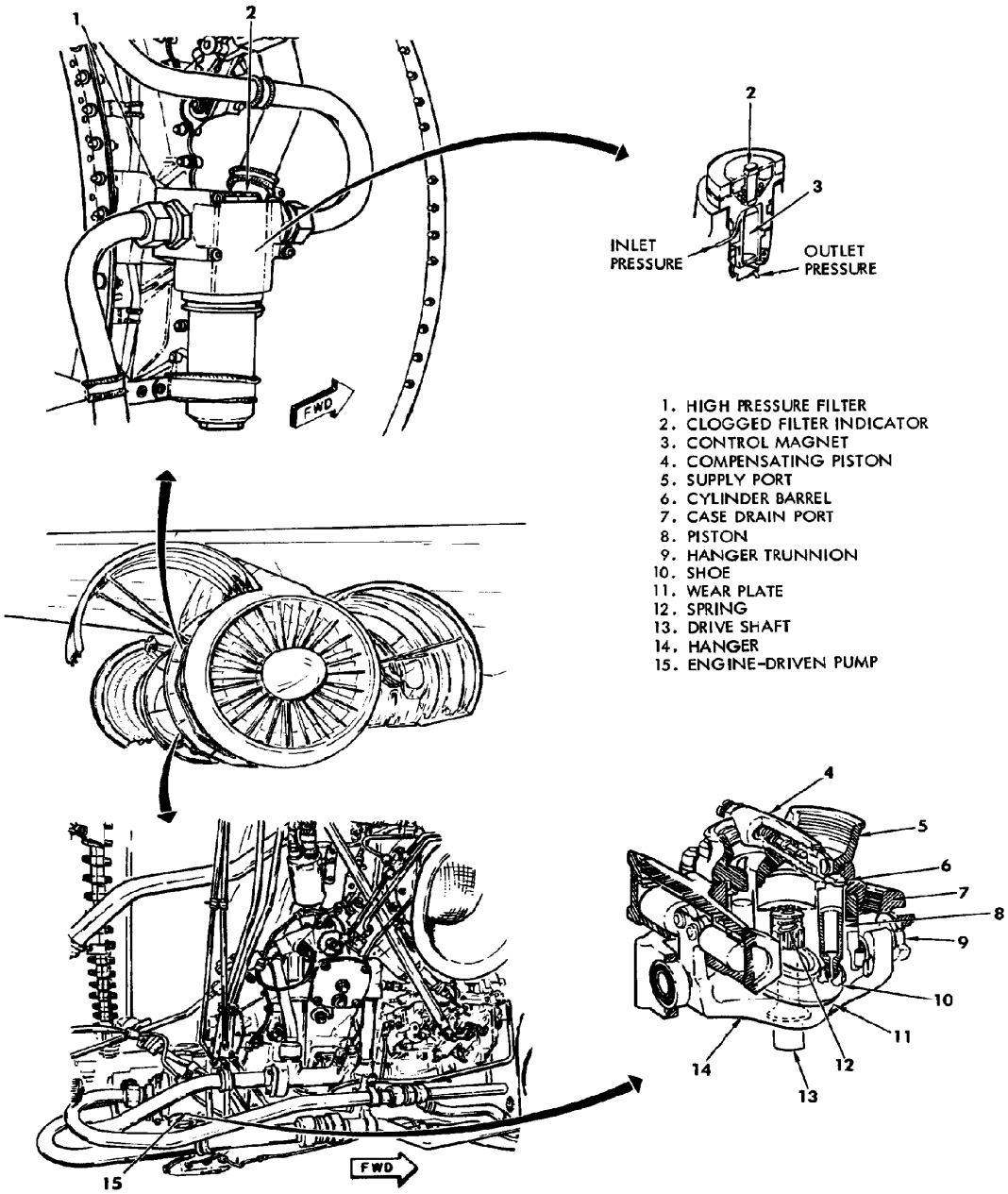

Engine Mounted Hydraulic System No. 1 Components

1. SUCTION EXTERNAL CONNECTION
2. PRESSURE EXTERNAL CONNECTION

LOCATED ON WALL OF FUSELAGE
IN FWD END OF WHEEL WELL

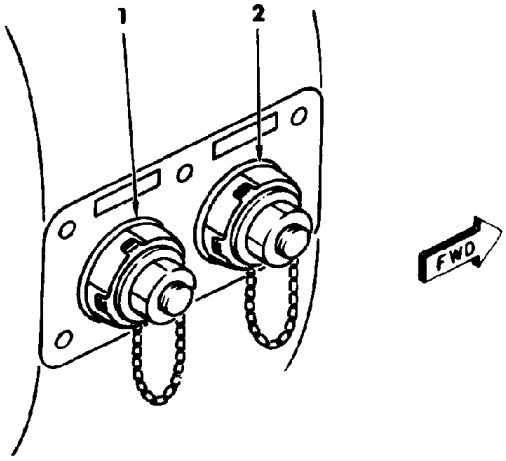

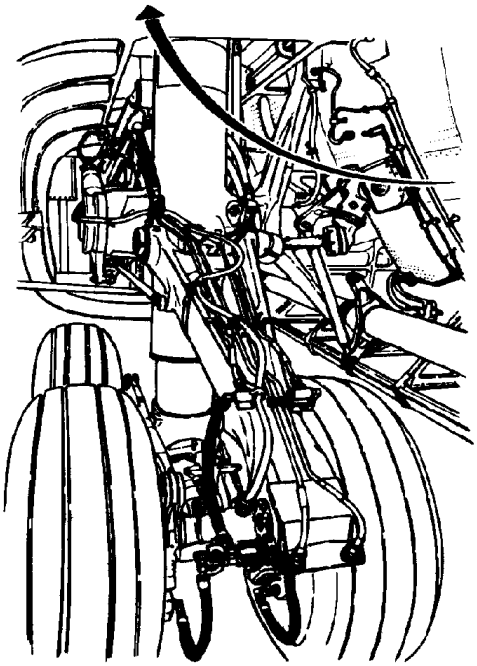

RIGHT MLG WHEEL WELL
(LOOKING AFT)

Hydraulic System No. 1 External Ground Connections

Hydraulic System No. 2

The power section of system No. 2 is very similar to the power section of system No. 1. The only differences are location of components and number and type of suction boost pumps. The system is powered by two variable volume hydraulic pumps connected in parallel. The engine-driven pumps for this system are driven by engines No. 1 and 2. Test stand connections are located in the forward end of the left MLG wheel well. A hydraulic reservoir and most system components are located in a service center on the left side of the cargo compartment. In addition to an electrically-driven suction boost pump of the type used in system No. 1, a hydraulically-driven suction boost pump ensures an adequate supply of fluid to the suction side of the engine-driven pumps.

Pressure to drive this boost pump is provided by the system as it becomes operational. Hydraulic system No. 2 powers the ailerons, elevators, rudder, pitch trim motor, emergency generator, landing gear including steering and brakes, spoilers, flaps, and the universal aerial refueling receptacle slipway installation (UARRSI). Provisions are made for interconnecting hydraulic system No. 3 with hydraulic system No. 2. A ground test connection in the forward end of the left MLG wheel well enables a hydraulic test stand to be connected for ground testing systems connected to system No. 2. The hydraulic system is operated from a hydraulic control panel at the flight engineer's station. This panel includes an ENG VALVES switch for each engine, one SUCT BOOST PUMP switch, three PRESS LOW lights and a hydraulic pressure gauge.

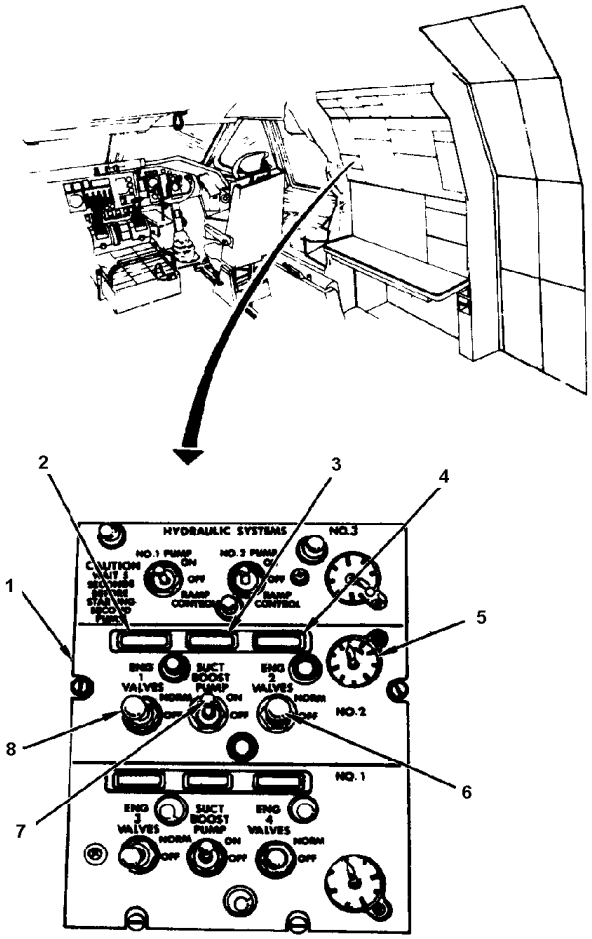

1. HYD SYS NO. 2 CONTROL PANEL
2. ENG NO. 1 PUMP PRESS LOW LIGHT
3. SUCTION BOOST PUMP PRESS LOW LIGHT
4. ENG NO. 2 PUMP PRESS LOW LIGHT
5. PRESSURE INDICATOR
6. ENG NO. 2 VALVES SWITCH
7. SUCT BOOST PUMP SWITCH
8. ENG NO. 1 VALVES SWITCH

Hydraulic System No. 2 Controls

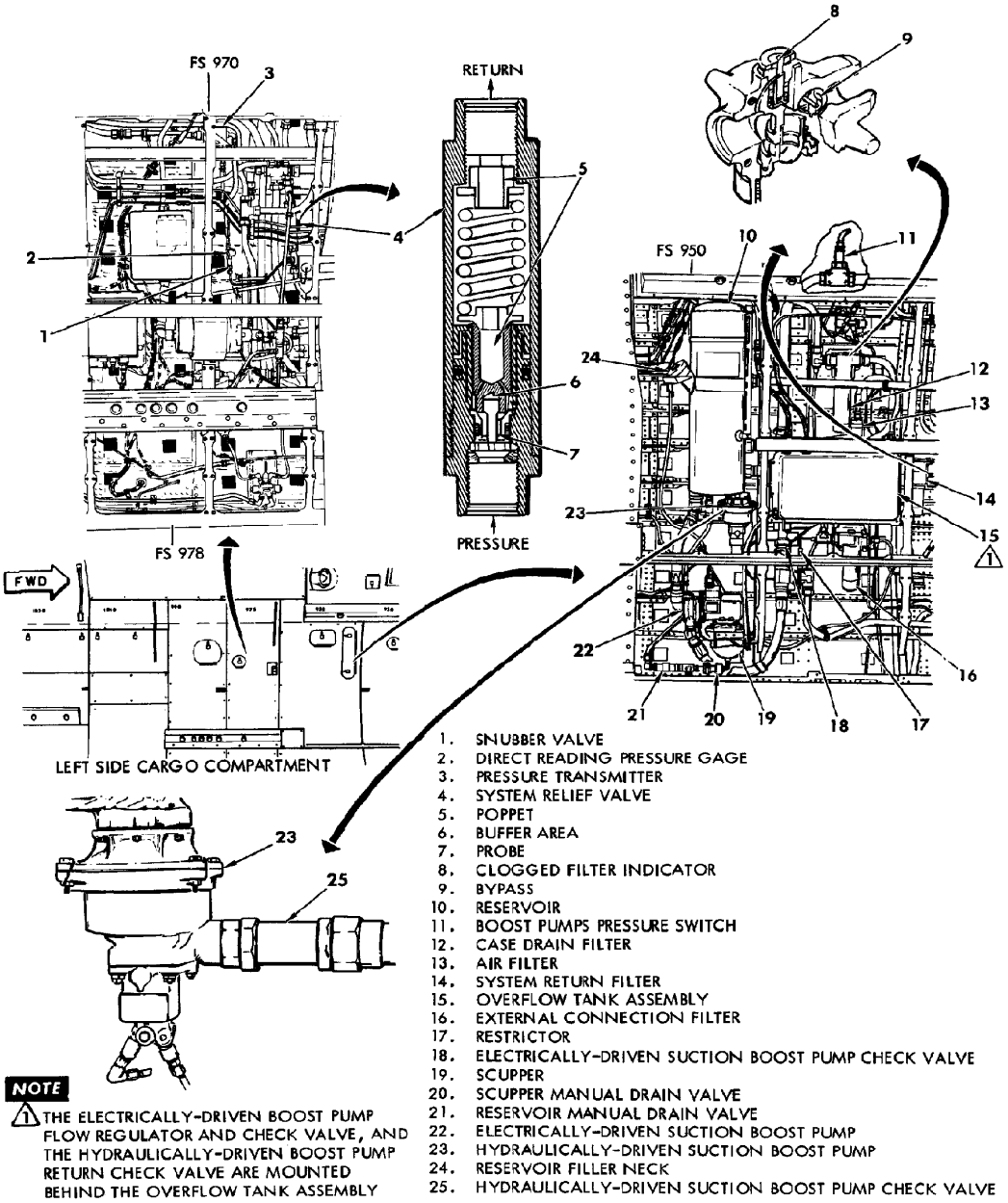

Hydraulic System No. 2 Service Center Components

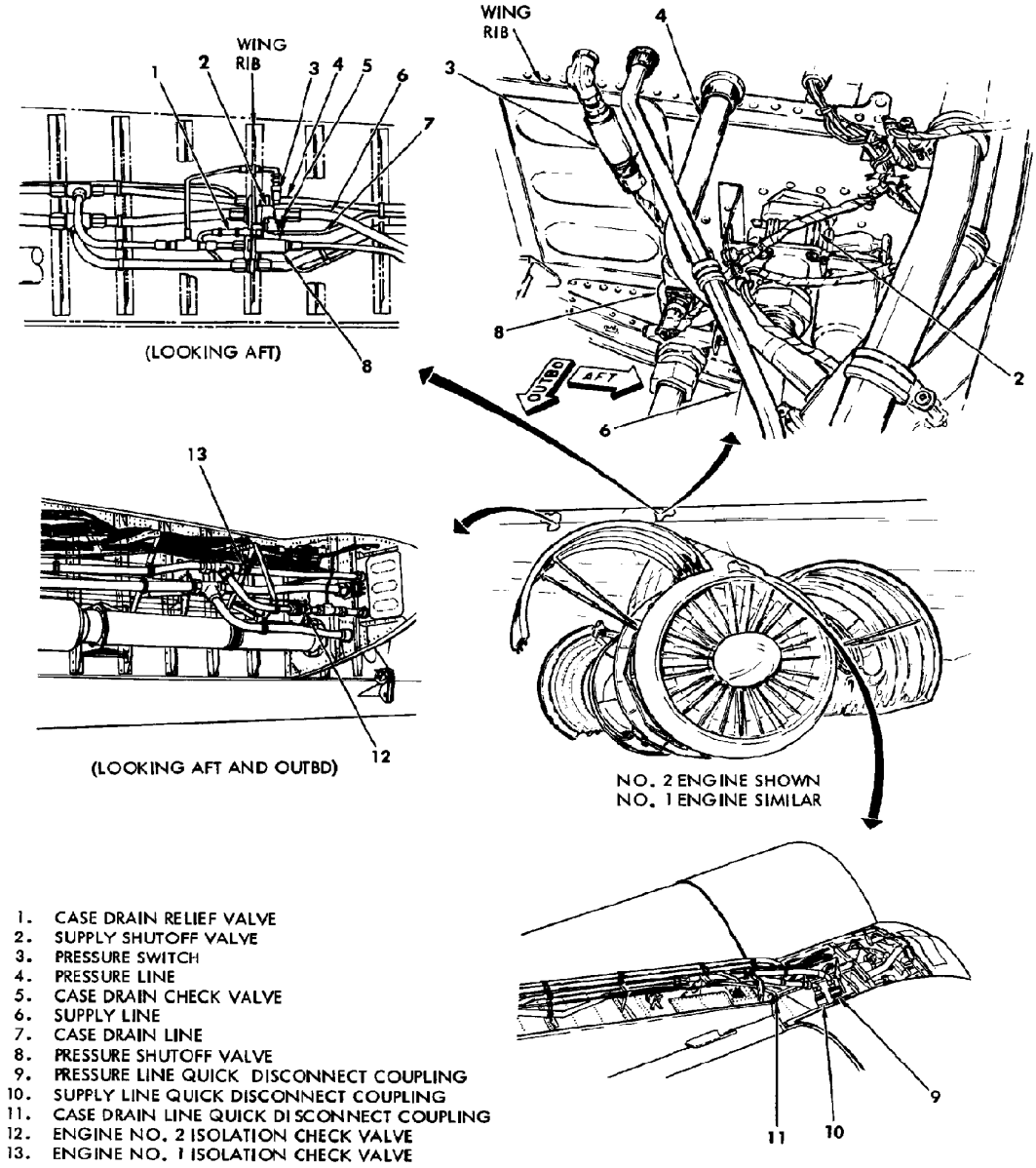

1. CASE DRAIN RELIEF VALVE
2. SUPPLY SHUTOFF VALVE
3. PRESSURE SWITCH
4. PRESSURE LINE
5. CASE DRAIN CHECK VALVE
6. SUPPLY LINE
7. CASE DRAIN LINE
8. PRESSURE SHUTOFF VALVE
9. PRESSURE LINE QUICK DISCONNECT COUPLING
10. SUPPLY LINE QUICK DISCONNECT COUPLING
11. CASE DRAIN LINE QUICK DISCONNECT COUPLING
12. ENGINE NO. 2 ISOLATION CHECK VALVE
13. ENGINE NO. 1 ISOLATION CHECK VALVE

Left Wing and Pylon Hydraulic System No. 2 Components

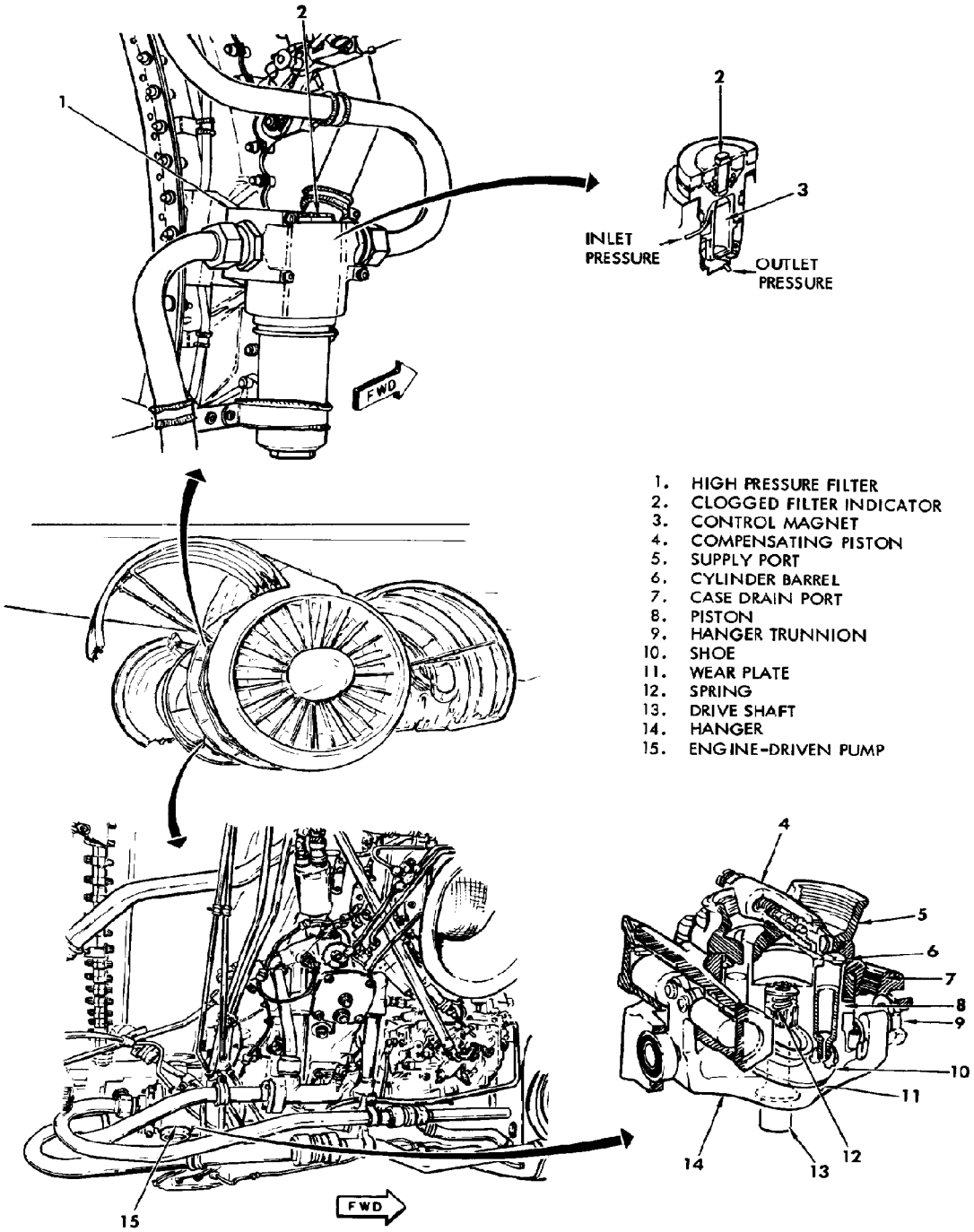

Engine Mounted Hydraulic System No. 2 Components

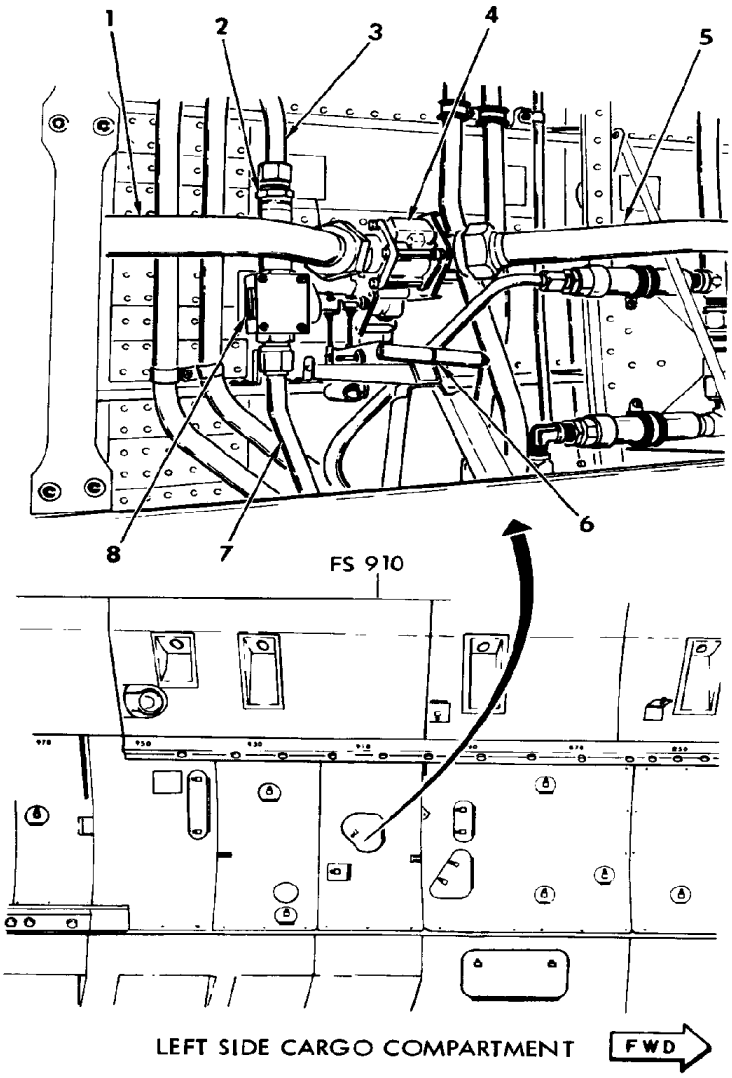

1. SYSTEM NO. 2 RESERVOIR VENT LINE
2. SYSTEM NO. 2 CHECK VALVE
3. SYSTEM NO. 2 PRESSURE LINE
4. VENT SHUTOFF VALVE
5. SYSTEM NO. 3 RESERVOIR VENT LINE
6. INTERCONNECT VALVE HANDLE
7. SYSTEM NO. 3 PRESSURE LINE
8. PRESSURE SHUTOFF VALVE

Hydraulic System No. 2 and No. 3 Interconnect Valves

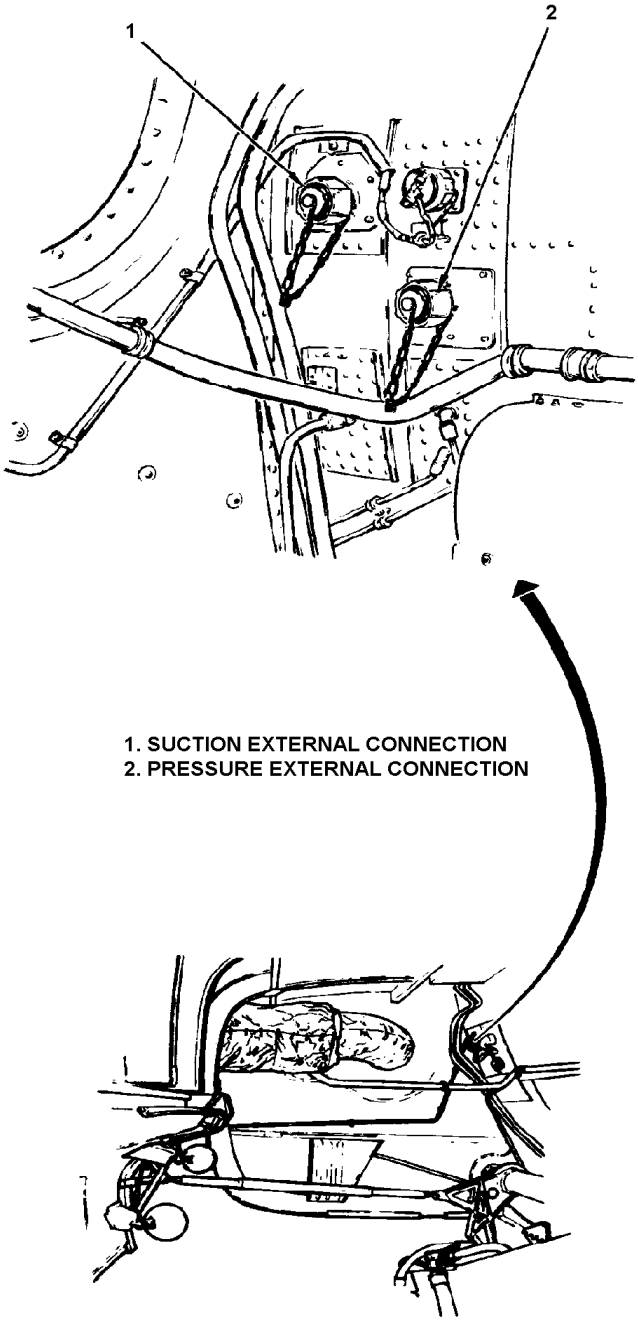

Hydraulic System No. 2 External Ground Connections

Hydraulic System No. 3

Hydraulic system No. 3 is powered by two electrically-driven, variable-volume pumps connected in parallel. This system supplies hydraulic power for normal operation of the cargo doors, APU starter, flap system, and spoilers; this system also supplies power for emergency operation of the brakes, elevators, and the aileron servo tab lockout mechanism. Except for the electrically-driven pumps and the control panel, all system components are located in a service center on the left side of the cargo compartment just forward of service center No. 2. Manually operated interconnect valves allow hydraulic power from system No. 3 to be delivered to system No. 2 during ground checkout. Two piston-type accumulators at the service center store a reserve supply of fluid under pressure to start the APU and provide emergency brakes when the electrically-driven pumps are not operating. A hand pump is incorporated to charge the accumulators and to permit manual operation of the cargo doors. A pressure gauge and two pump switches for hydraulic system No. 3 are located on the upper section of the hydraulic systems control panel at the flight engineer's station. This section contains a pressure gauge and two PUMP switches. The pressure gauge indicates system pressure, and a HYD SYS NO. 3 PRESS ON light on the brake selector panel comes on when the brake selector switch is placed to EMER position.

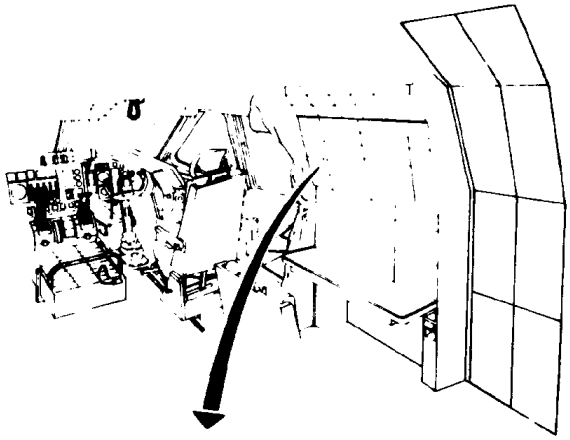

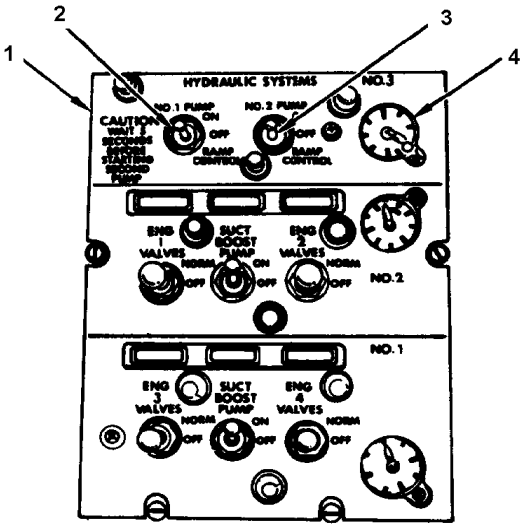

1. HYD SYSTEM NO. 3 CONTROL PANEL
2. NO. 1 PUMP SWITCH
3. NO. 2 PUMP SWITCH
4. PRESSURE INDICATOR

Hydraulic System No. 3 Controls

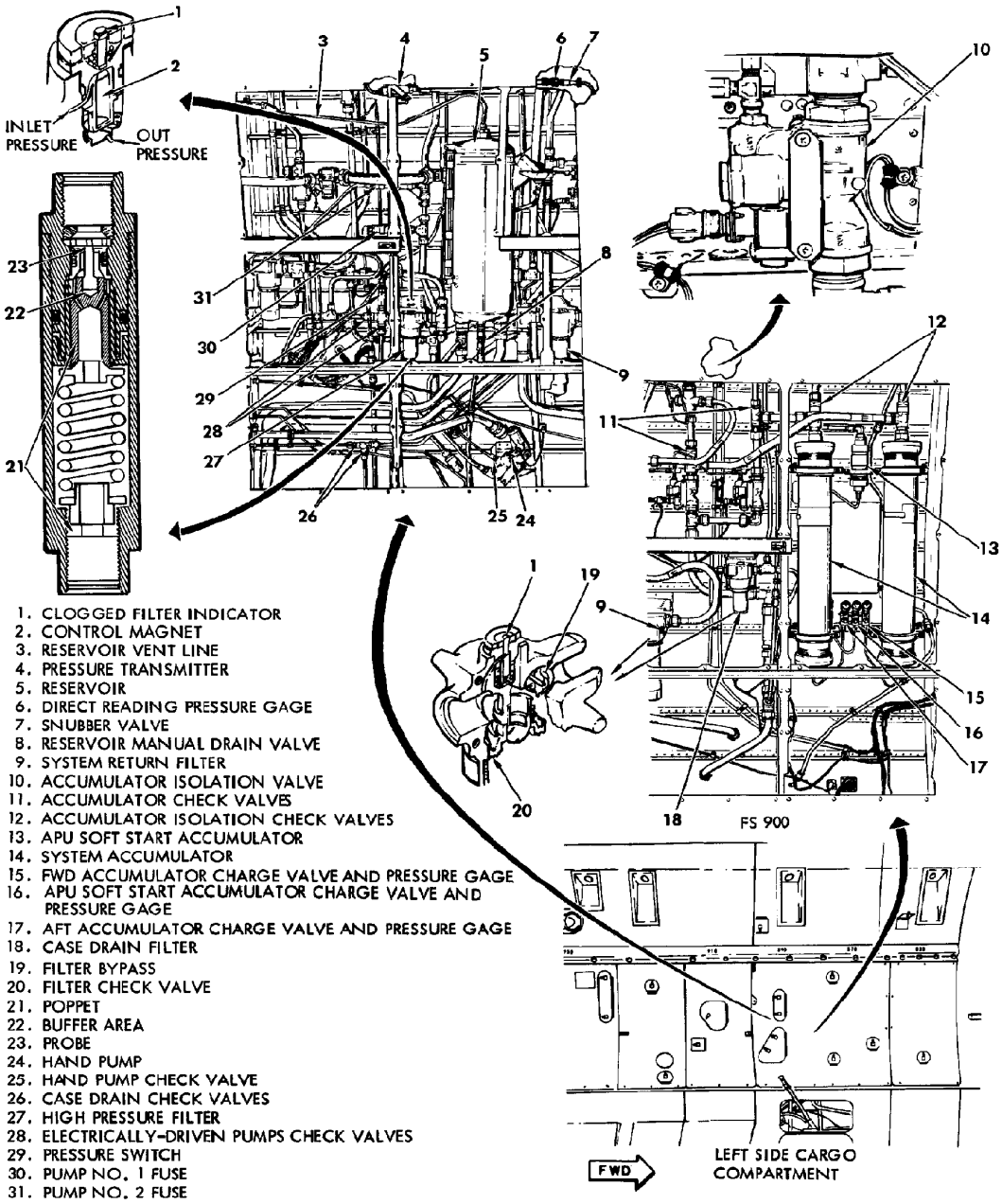

1. CLOGGED FILTER INDICATOR
2. CONTROL MAGNET
3. RESERVOIR VENT LINE
4. PRESSURE TRANSMITTER
5. RESERVOIR
6. DIRECT READING PRESSURE GAGE
7. SNUBBER VALVE
8. RESERVOIR MANUAL DRAIN VALVE
9. SYSTEM RETURN FILTER
10. ACCUMULATOR ISOLATION VALVE
11. ACCUMULATOR CHECK VALVES
12. ACCUMULATOR ISOLATION CHECK VALVES
13. APU SOFT START ACCUMULATOR
14. SYSTEM ACCUMULATOR
15. FWD ACCUMULATOR CHARGE VALVE AND PRESSURE GAGE
16. APU SOFT START ACCUMULATOR CHARGE VALVE AND PRESSURE GAGE
17. AFT ACCUMULATOR CHARGE VALVE AND PRESSURE GAGE
18. CASE DRAIN FILTER
19. FILTER BYPASS
20. FILTER CHECK VALVE
21. POPPET
22. BUFFER AREA
23. PROBE
24. HAND PUMP
25. HAND PUMP CHECK VALVE
26. CASE DRAIN CHECK VALVES
27. HIGH PRESSURE FILTER
28. ELECTRICALLY-DRIVEN PUMPS CHECK VALVES
29. PRESSURE SWITCH
30. PUMP NO. 1 FUSE
31. PUMP NO. 2 FUSE

Hydraulic System No. 3 Service Center Components

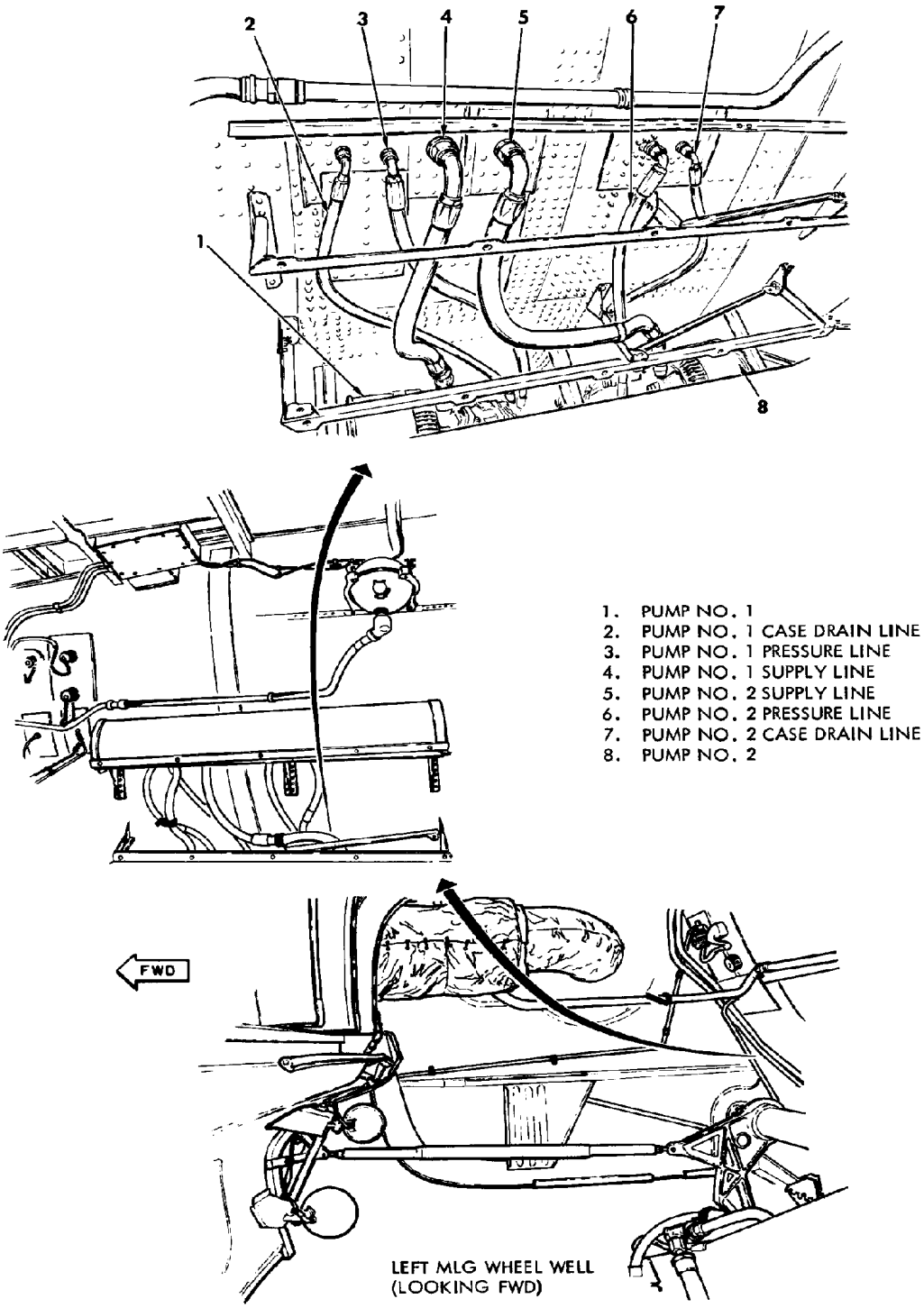

1. PUMP NO. 1
2. PUMP NO. 1 CASE DRAIN LINE
3. PUMP NO. 1 PRESSURE LINE
4. PUMP NO. 1 SUPPLY LINE
5. PUMP NO. 2 SUPPLY LINE
6. PUMP NO. 2 PRESSURE LINE
7. PUMP NO. 2 CASE DRAIN LINE
8. PUMP NO. 2

Hydraulic System No. 3 Electrically-Driven Pumps

ICE AND RAIN PROTECTION SYSTEM

General Description

The ice and rain protection system of the C-141 airplane includes wing and empennage anti-ice, pitot static anti-ice, windshield anti-ice, ice detection, and engine pressure ratio (EPR) probe anti-ice subsystems. Refer to T.O. lC-141B-2-27GS-00-1 for information on the angle-of-attack sensor vane deicing system; T.O. lC-141B-2-34GS-00-1 for total air temperature probe deicing subsystem information; and T.O. lC-141B-2-71GS-00-1 for engine and nacelle anti-icing subsystem information. Except as noted, overall ice and rain protection system functions and operation are described in this section.

Wing Anti-Ice and Empennage Deice Subsystem

Ice formation on the wing leading edge and empennage leading edge is prevented by hot engine bleed air in the wings and electrically heated elements in the empennage. The wing anti-ice system heats the wing leading edge surfaces by circulating a mixture of bleed air and leading edge plenum air between the double skins of the wing leading edges. The wing anti-ice system uses bleed air from the cross-wing manifold. The bleed air routes through six modulating and shutoff valves to the diffuser ducts. Bleed air ejected from nozzles on the diffuser ducts mixes with air inside the wings and then routes through passages in the leading edge skin. The mixed air is discharged through louvered vents in each pylon and in each wing tip. The system is capable of anti-icing three leading-edge sections of each wing: one section between the pylons and two sections outboard of each outboard pylon. The system does not provide anti-icing for each wing leading-edge section between the fuselage and the inboard pylon. Ice protection is also not provided for the vertical stabilizer, but a deicing system is incorporated in the horizontal stabilizer leading edge. Empennage deicing is provided by electrically heated metal elements imbedded in the leading edge sections of the horizontal stabilizer.

The horizontal stabilizer leading edge is divided into eight sections, each containing two shedding areas and three parting strips. The deicing and temperature controllers route AC power to the shedding areas and parting strips. The electrical power to the shedding areas is cycled on and off, and the ice is blown off by the airstream. Electrical power to the parting strips is applied continuously. Control of the system is maintained by a temperature controller, a deicing controller, and temperature sensing elements in the leading edge of the horizontal stabilizer. The deicing controller provides power to the shedding areas.

The temperature sensors in the shedding areas provide overheat protection and signal the controller to shut off power whenever the heating elements exceed 32 degrees Celsius (C). The temperature controller provides power to the parting strips. The total temperature sensor signals the controller to remove power when a temperature of -29 degrees C is reached. The parting strip temperature sensors signal the controller to remove power when the parting strip heating elements exceed 32 degrees C. In air temperatures below -29 degrees C, the controller removes power from both parting and shedding areas.

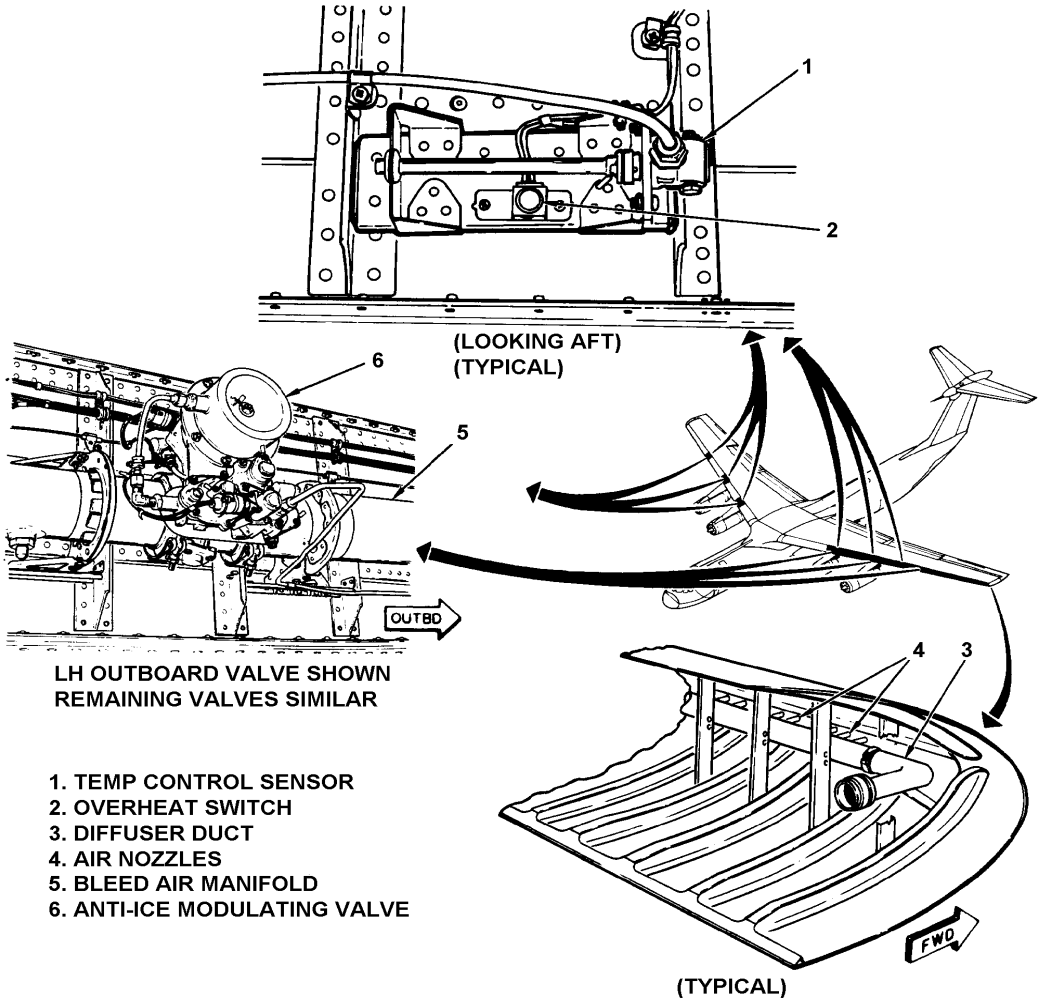

1. TEMP CONTROL SENSOR
2. OVERHEAT SWITCH
3. DIFFUSER DUCT
4. AIR NOZZLES
5. BLEED AIR MANIFOLD
6. ANTI-ICE MODULATING VALVE

Wing Anti-Ice System Components (Sheet 1 of 2)

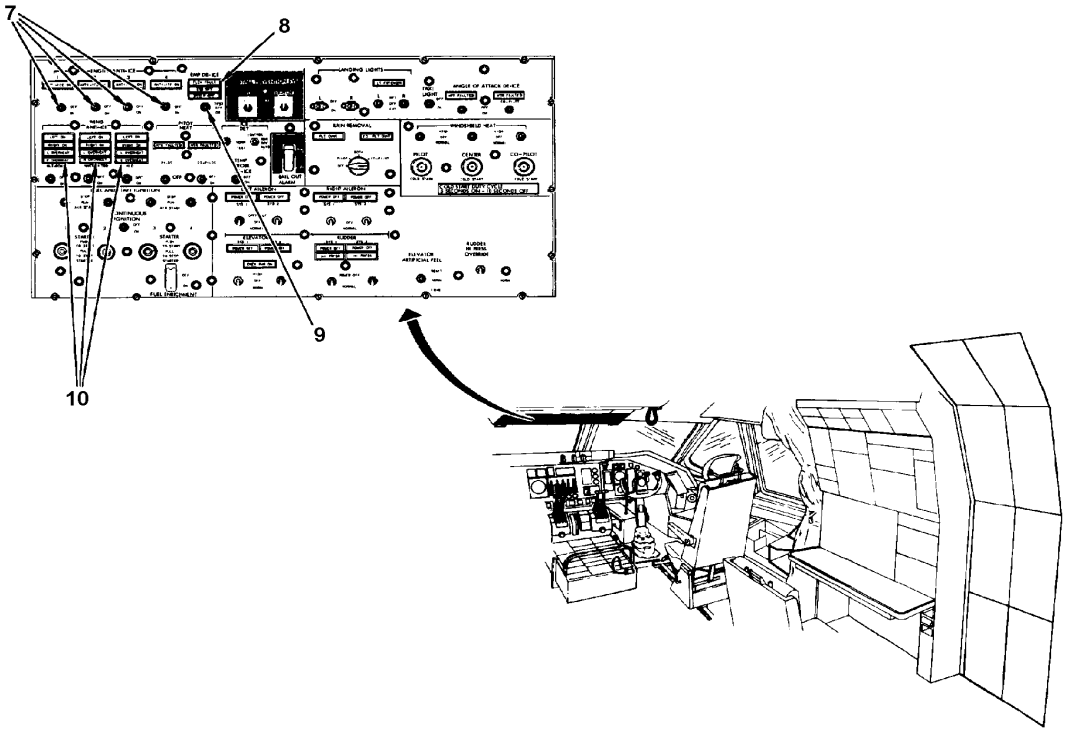

7. WING ANTI-ICE CONTROL SWITCHES
8. EMP DE-ICE INDICATOR LIGHTS
9. EMP DE-ICE CONTROL SWITCH
10. WING ANTI-ICE INDICATOR LIGHTS

Wing Anti-Ice System Components (Sheet 2 of 2)

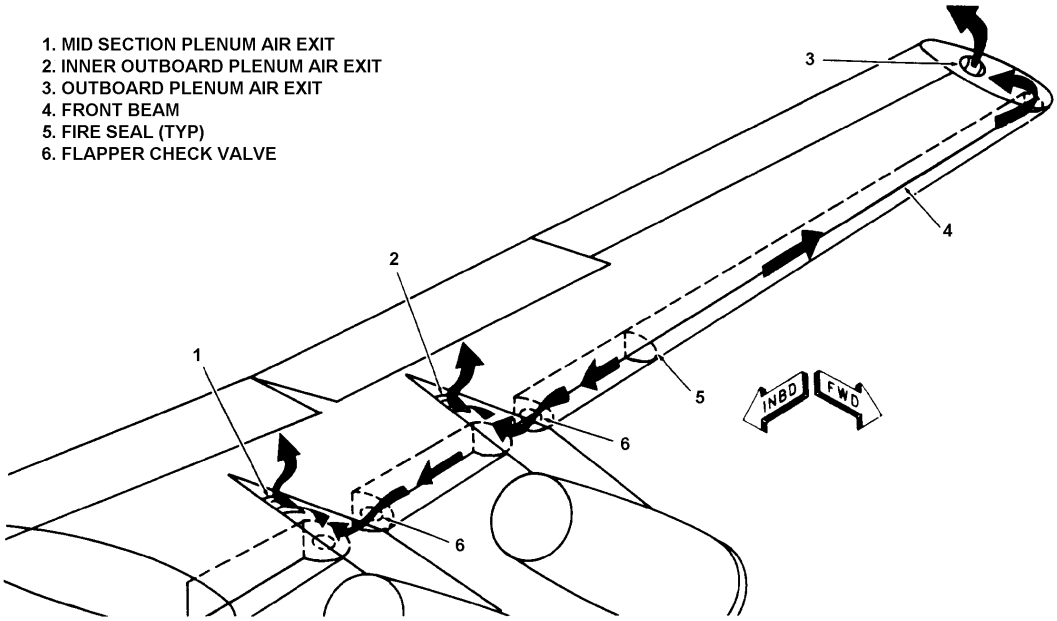

Wing Anti-Ice Dumping Provisions

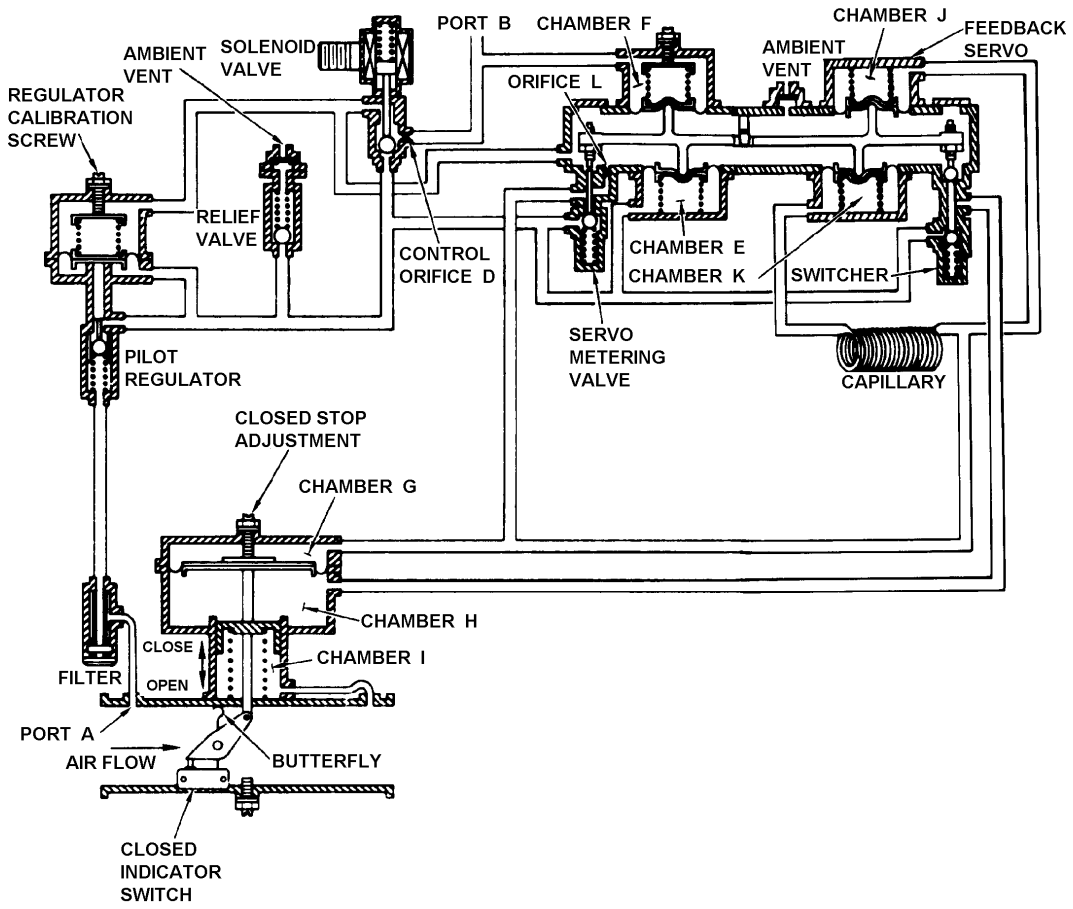

Wing Anti-Ice Modulating Valve Schematic Diagram

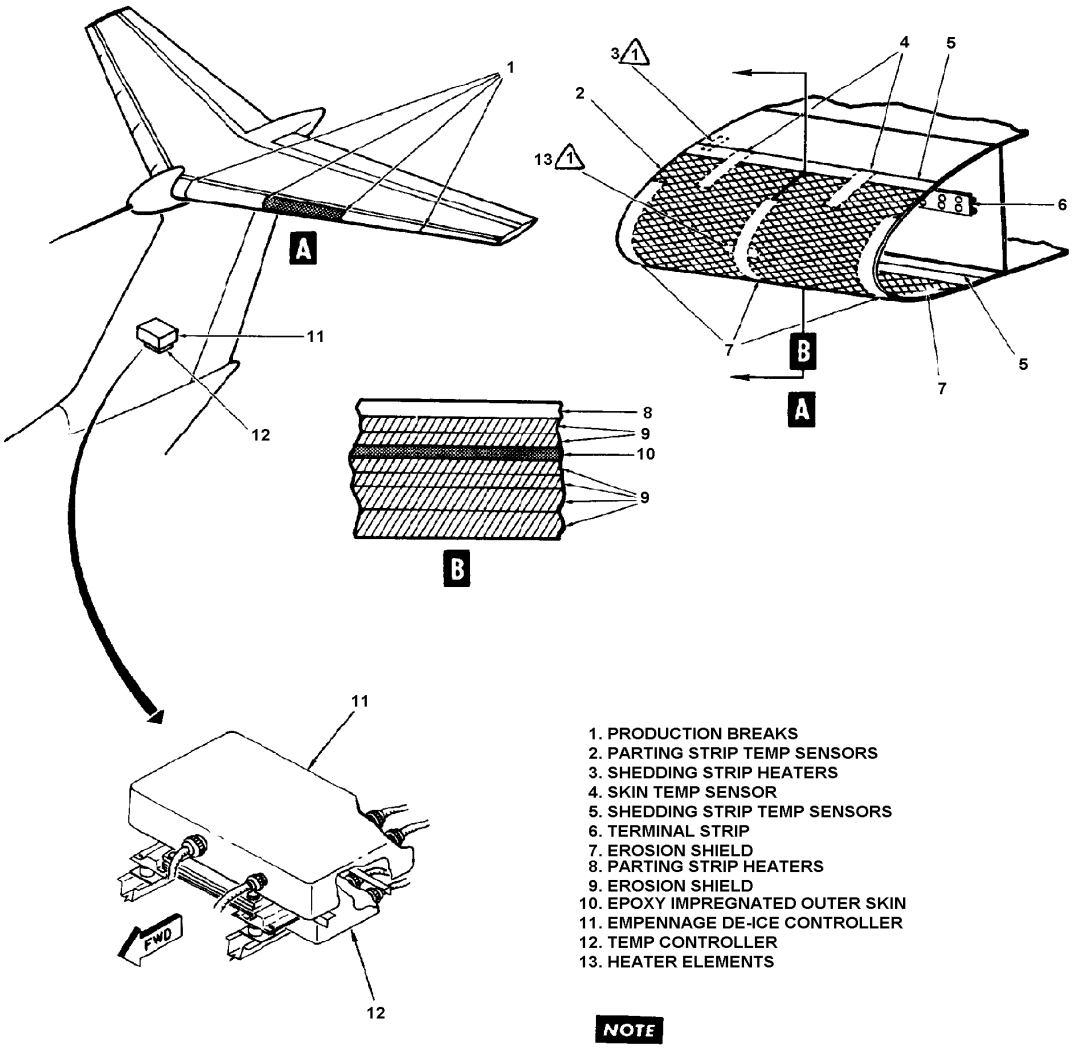

1. PRODUCTION BREAKS
2. PARTING STRIP TEMP SENSORS
3. SHEDDING STRIP HEATERS
4. SKIN TEMP SENSOR
5. SHEDDING STRIP TEMP SENSORS
6. TERMINAL STRIP
7. EROSION SHIELD
8. PARTING STRIP HEATERS
9. EROSION SHIELD
10. EPOXY IMPREGNATED OUTER SKIN
11. EMPENNAGE DE-ICE CONTROLLER
12. TEMP CONTROLLER
13. HEATER ELEMENTS

NOTE

1 ON LH INBOARD HORIZONTAL STABILIZER ONLY.

Empennage Deice System Components

Pitot-Static Tubes Anti-Ice Subsystem

Each pitot-static tube contains a head and a mast heating element for anti-icing/deicing. The heating elements are controlled by the manually operated applicable PITOT HEAT switch on the pilot's overhead panel. When the heating elements are energized and heated, ice accumulation is removed from the probe. Two HTR FAULTED and one PITOT HEAT annunciator lights come on if heating operation fails.

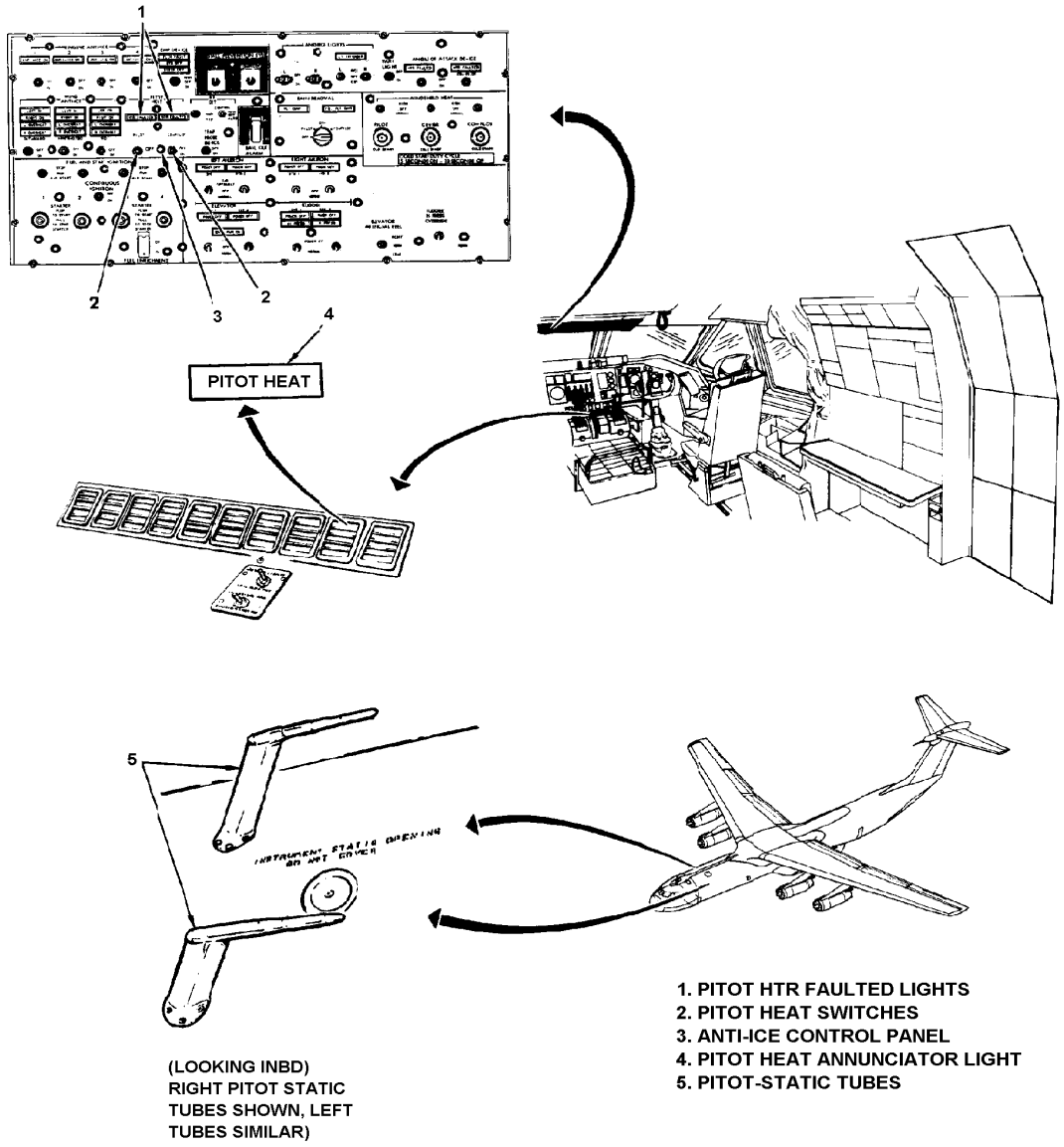

Pitot-Static Tubes Anti-Ice System Components

Windshield Anti-Ice and Rain Removal Subsystem

Protection from ice and rain for the flight compartment windshields is provided by an electrical heating system and engine bleed air. Three separate circuits control the windshield anti-ice system. The three front windshield panels are of laminated glass and vinyl construction with a thin coating of transparent, electrically conductive material between the outer glass layer and the vinyl interlayer. The coating provides both ice and fog protection and maintains an optimum temperature for protection against bird strikes.

The electrically conductive film on the windshields acts as a heater element to deice and defog the windshield. A transformer located in the right avionics bay provides voltage to the windshield film. Control switches on the pilot's overhead panel provide defogging and deicing operation. A COLD START switch manually starts the system at extremely low temperatures. The clear vision and side windshield panels have defrost and defogging capabilities only. The pilot's and copilot's windshields are equipped with a jet blast rain removal system. Continuous slot-type nozzles supply high-temperature, high-velocity air at the bases of the windshields. Engine bleed air is supplied to the nozzles from a point downstream of the air conditioning system primary heat exchangers.

The temperature of the air supply is controlled to a maximum 460 degrees Fahrenheit (F) by the primary heat exchangers. The rain removal system is manually operated with a selection switch on the pilot's overhead panel. The selection switch has four positions: OFF, PILOT, BOTH, and COPILOT. When the system is off, the pressure regulator shutoff valves and the nozzle shutoff valves are closed. When the selection switch is placed in any of the remaining three positions, both pressure regulator valves are open when air pressure is applied. The electric motor-driven nozzle shutoff valves will open, depending on the position selected.

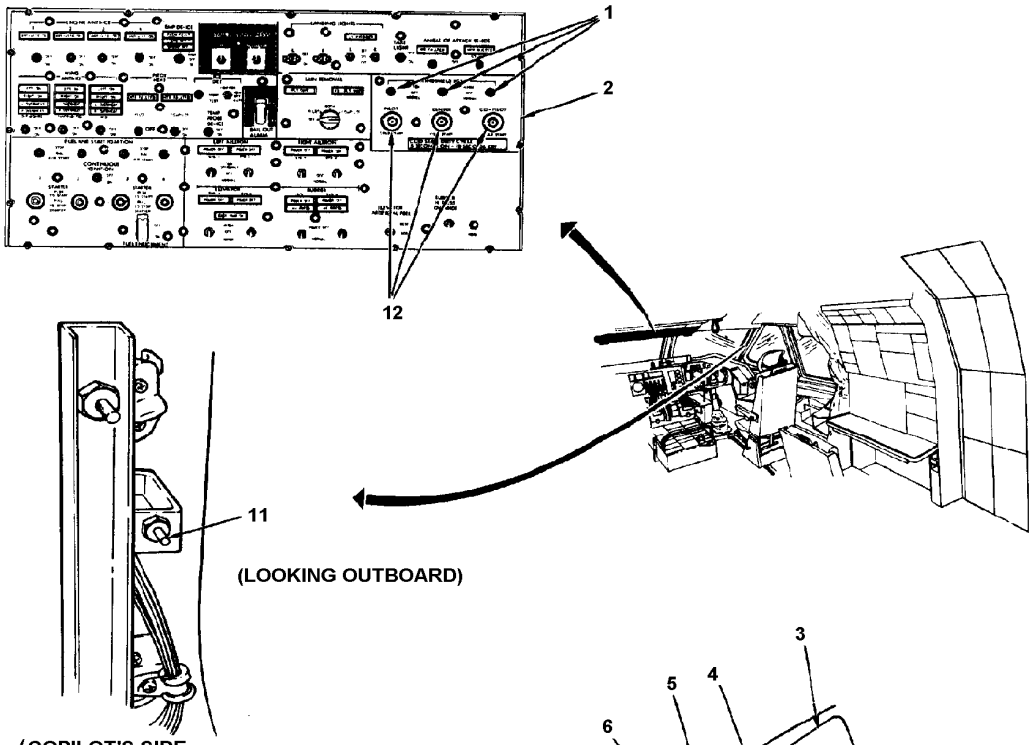

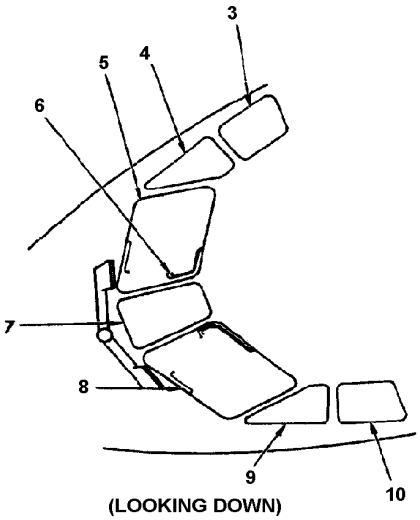

1. WINDSHIELD CONTROL SWITCHES
2. WINDSHIELD HEAT CONTROL PANEL
3. COPILOT'S SIDE WINDSHIELD
4. COPILOT'S CLEAR VISION WINDSHIELD
5. COPILOT'S WINDSHIELD
6. THERMISTOR
7. CENTER WINDSHIELD
8. PILOT'S WINDSHIELD
9. PILOT'S CLEAR VISION WINDSHIELD
10. PILOT'S SIDE WINDSHIELD
11. POWER CUTOFF SWITCH
12. WINDSHIELD COLD START SWITCHES

NOTE

1 THE LH AND RH WINDSHIELDS CONTROL SWITCHES CONTROL PILOT'S AND COPILOT'S SIDE WINDSHIELD DEFROST SYSTEM

Windshield Anti-Ice System Components (Sheet 1 of 3)

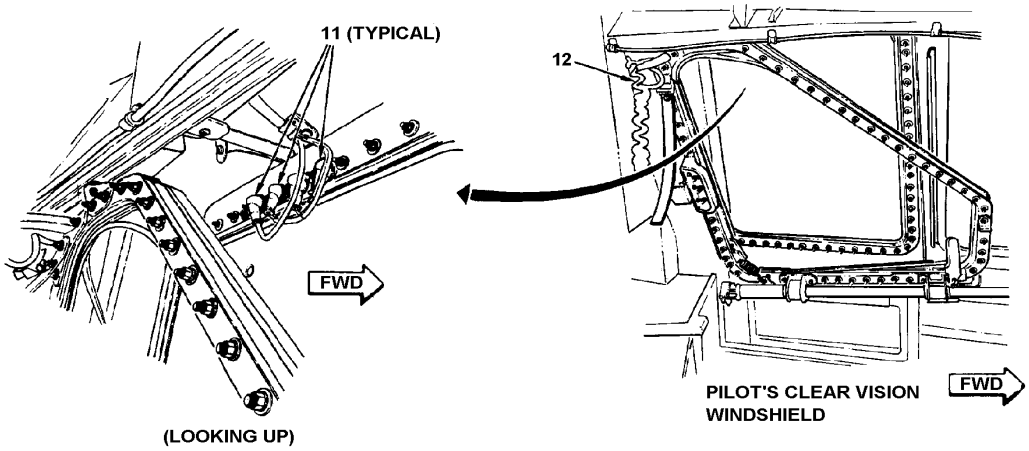

11. PILOT'S WINDSHIELD ANTI-ICE ELECTRICAL CONNECTORS
12. PILOT'S CLEAR VISION WINDSHIELD ANTI-ICE ELECTRICAL CONNECTORS
13. WINDSHIELD VOLTAGE CHART

13

WINDSHIELD VOLTAGE READINGS

WINDSHIELD	SWITCH POSITON	RESISTANCE CODE		
		RA	RB	RC
CENTER	HIGH NORMAL	324 (±20) 259 (±20)	301 (±20) 241 (±20)	278 (±20) 223 (±20)
FRONT	HIGH NORMAL	494 (±20) 396 (±20)	459 (±20) 368 (±20)	424 (±20) 340 (±20)
CLEAR VISION	HIGH OR NORMAL	56 (±10)	52 (±10)	48 (±10)
SIDE	HIGH OR NORMAL	95 (±5)	88 (±10)	81 (±9)
ALL VALUES ARE IN VOLTS, AC, 400 Hz, SINGLE PHASE				

Windshield Anti-Ice System Components (Sheet 2 of 3)

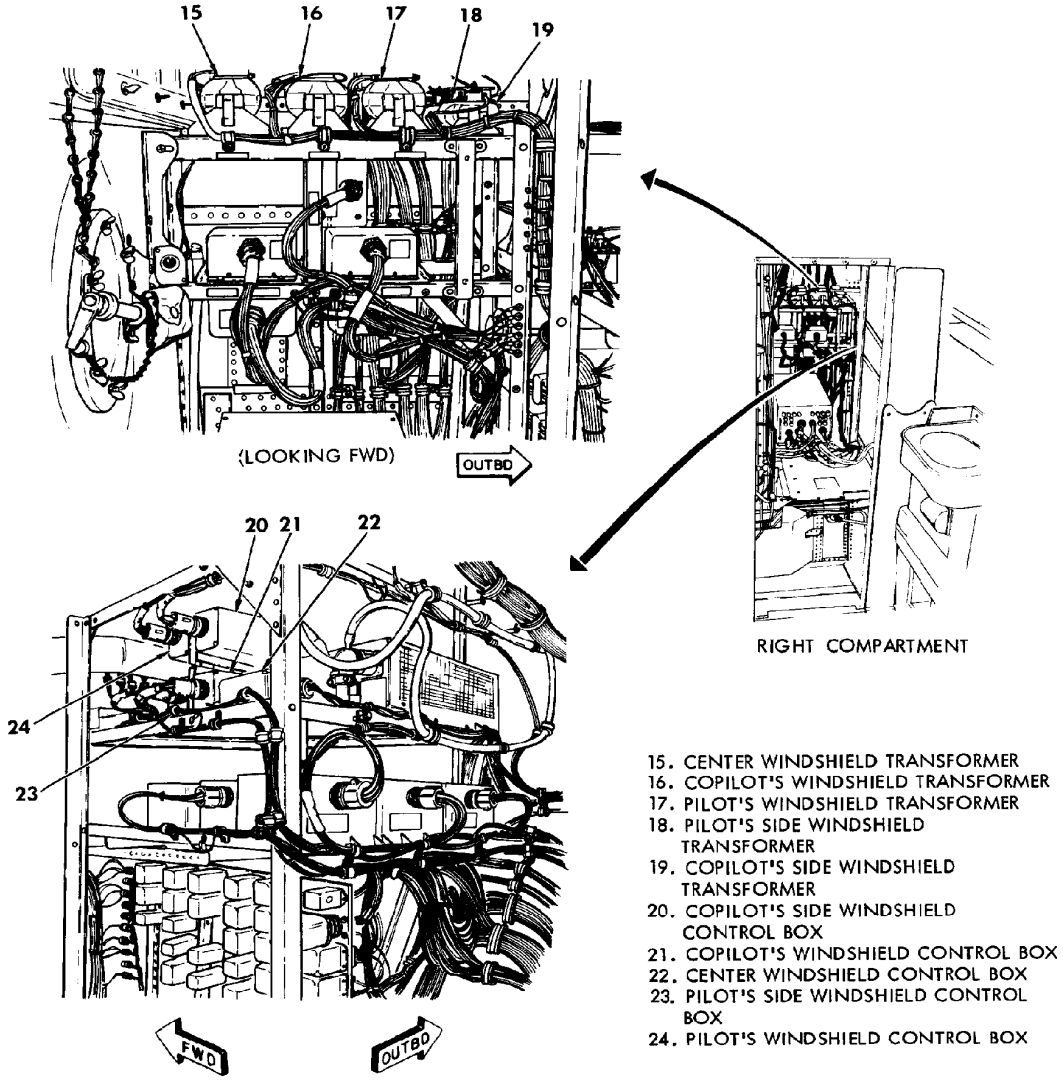

Windshield Anti-Ice System Components (Sheet 3 of 3)

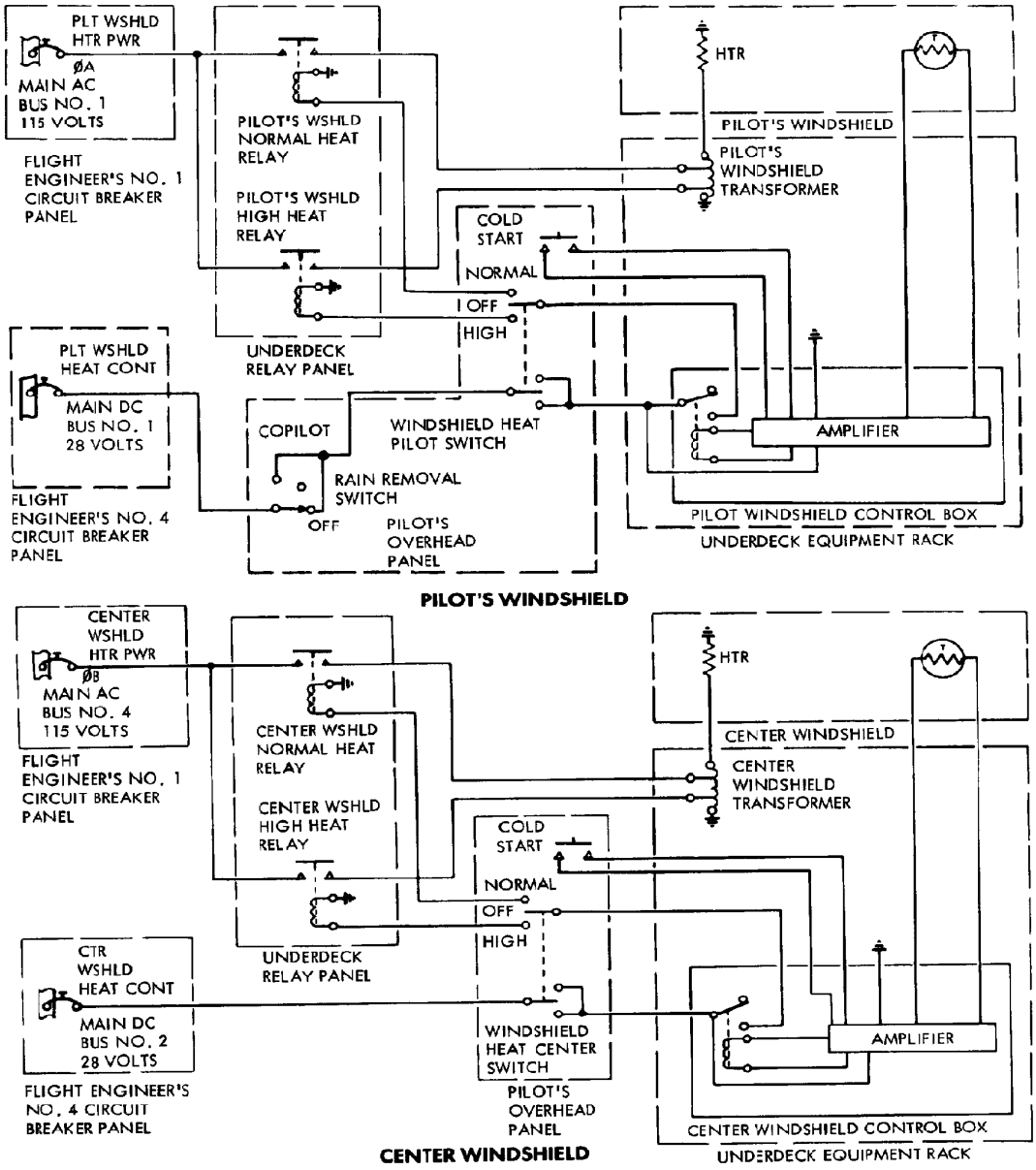

Pilot's and Center Windshield Electrical Schematic Diagrams

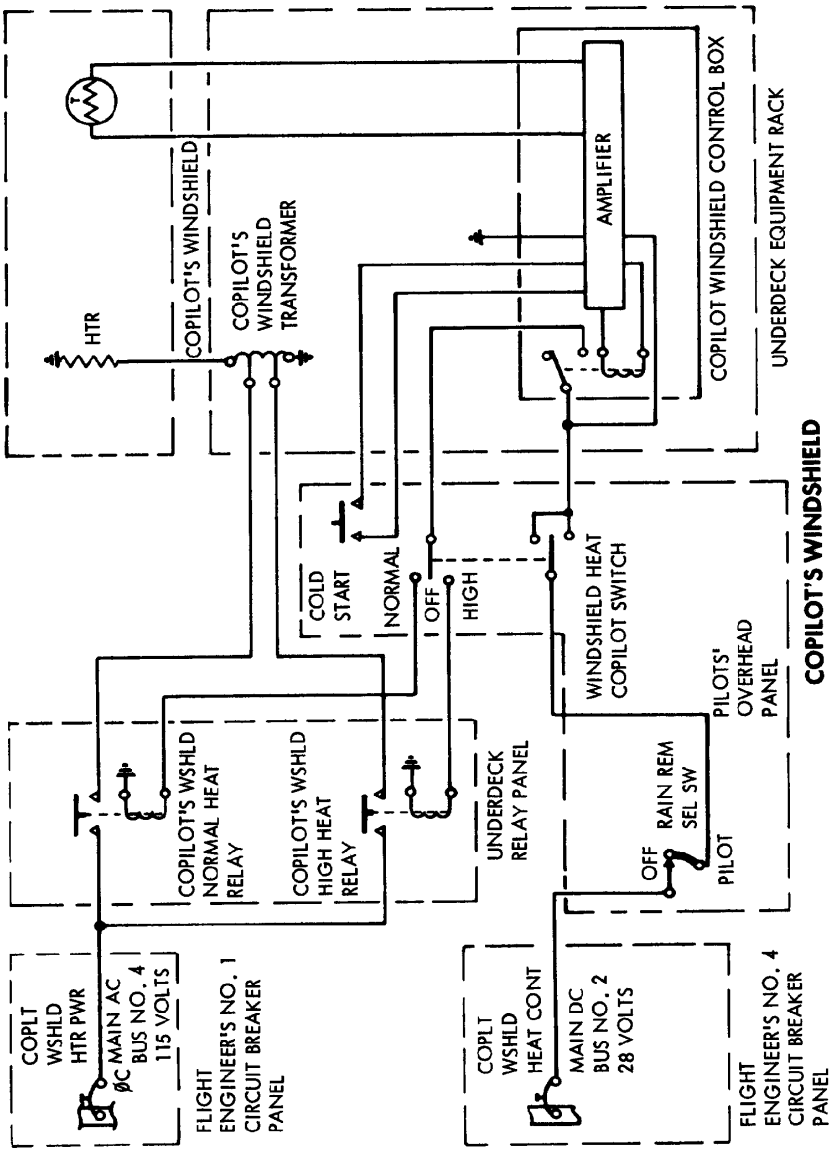

Copilot's Windshield Electrical Schematic Diagram

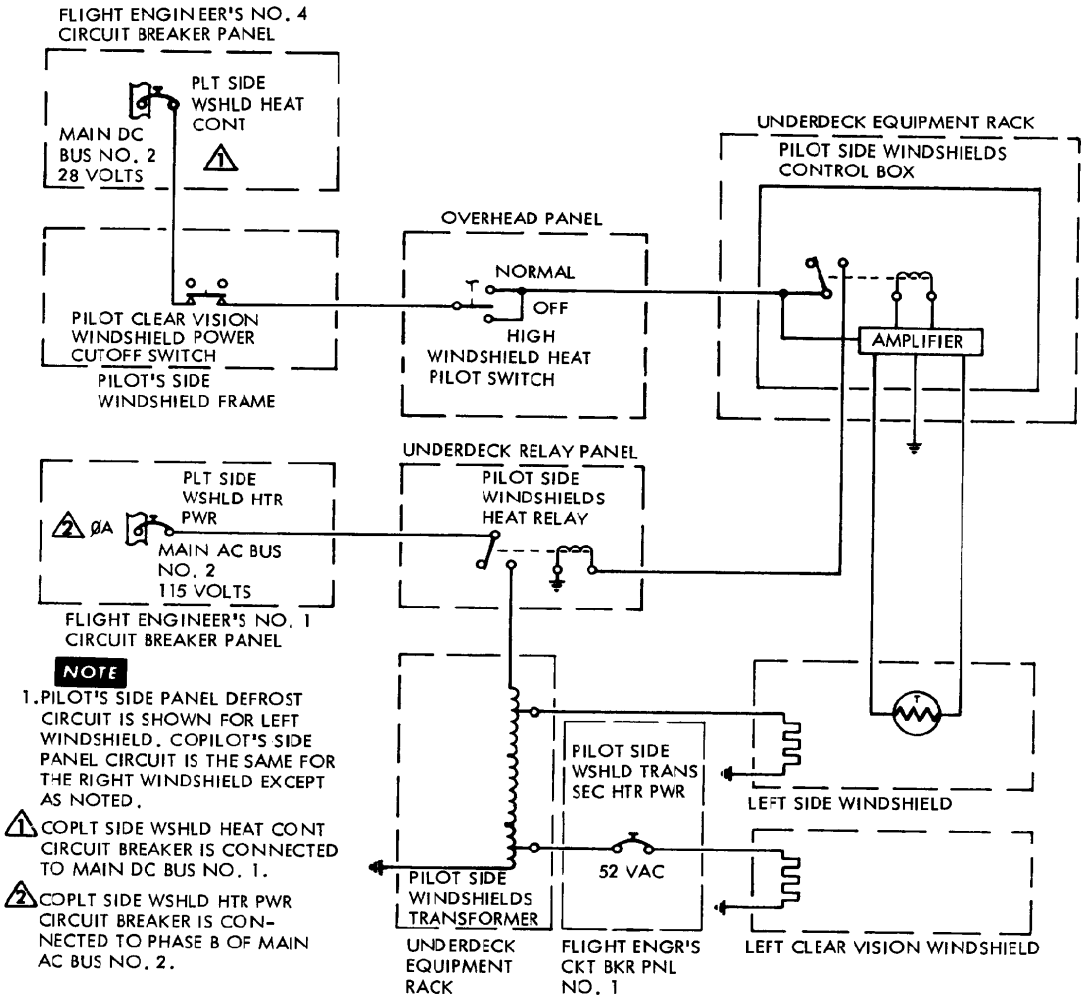

Side Windshields Electrical Schematic Diagram

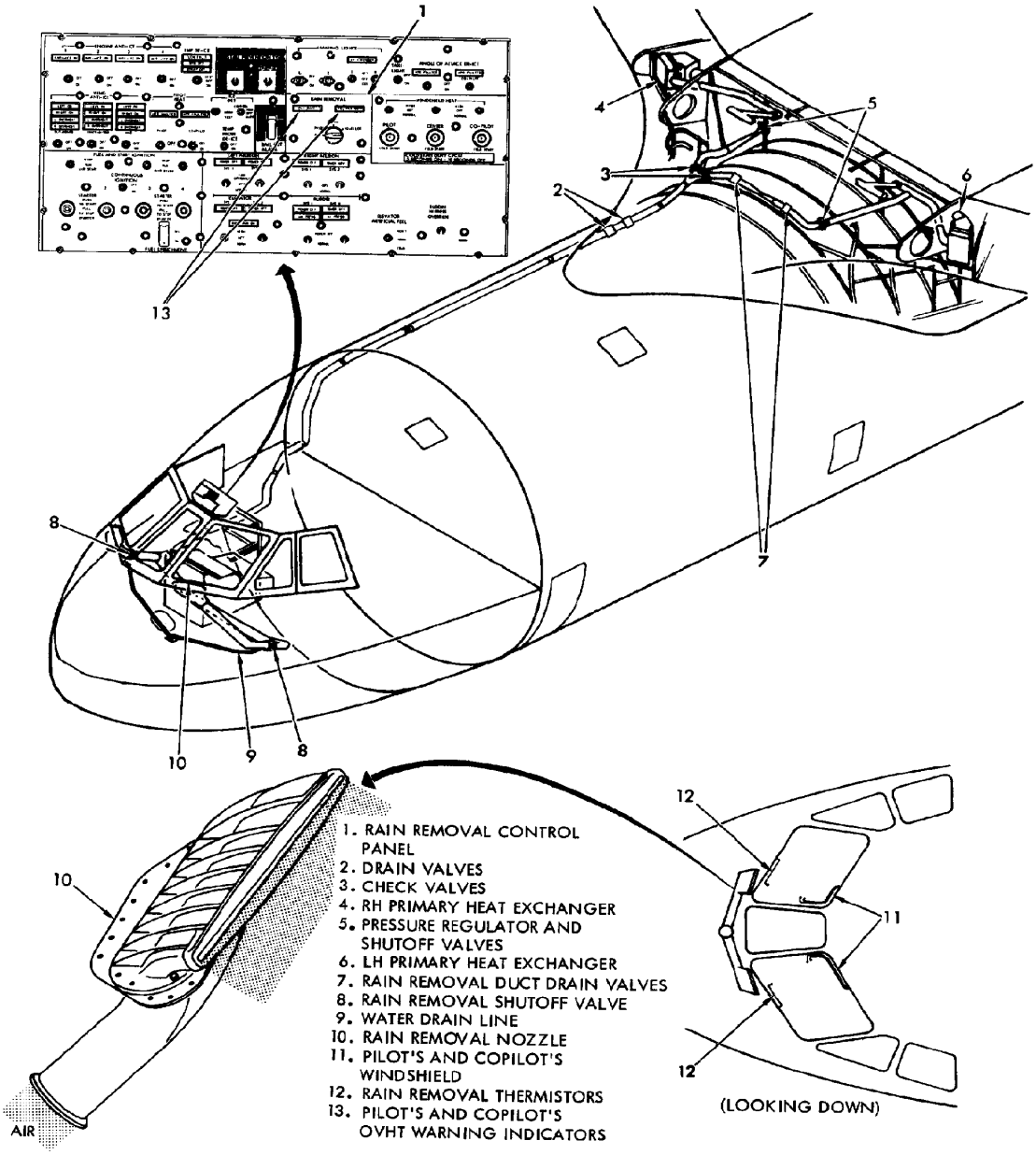

Windshield Rain Removal System Components

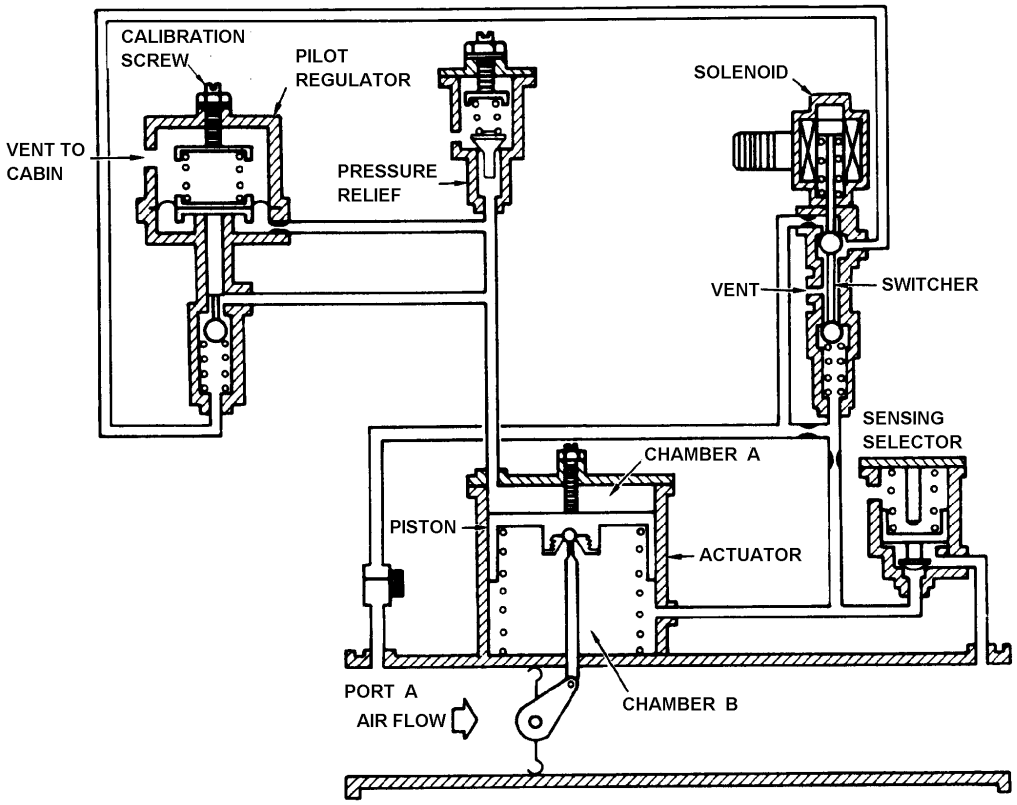

Windshield Rain Removal Pressure Regulator and Shutoff Valve Schematic Diagram

Ice Detection Subsystem

Icing conditions in the ambient air are monitored by an ice detector in the left forward fuselage. The ice detector has two probes, a temperature probe which senses ambient air temperature and a moisture probe which senses humidity, both of which protrude into the air stream flowing around the airplane. The probes are located on the left-hand side of the fuselage. When conditions which would cause ice formation on the engines, windshields, and leading edges are detected, a warning light comes on, and the engine anti-ice and EPR probe anti-ice systems automatically activate. It is necessary for both probes to sense icing conditions for operation of the system. The remaining anti-ice systems must be manually activated.

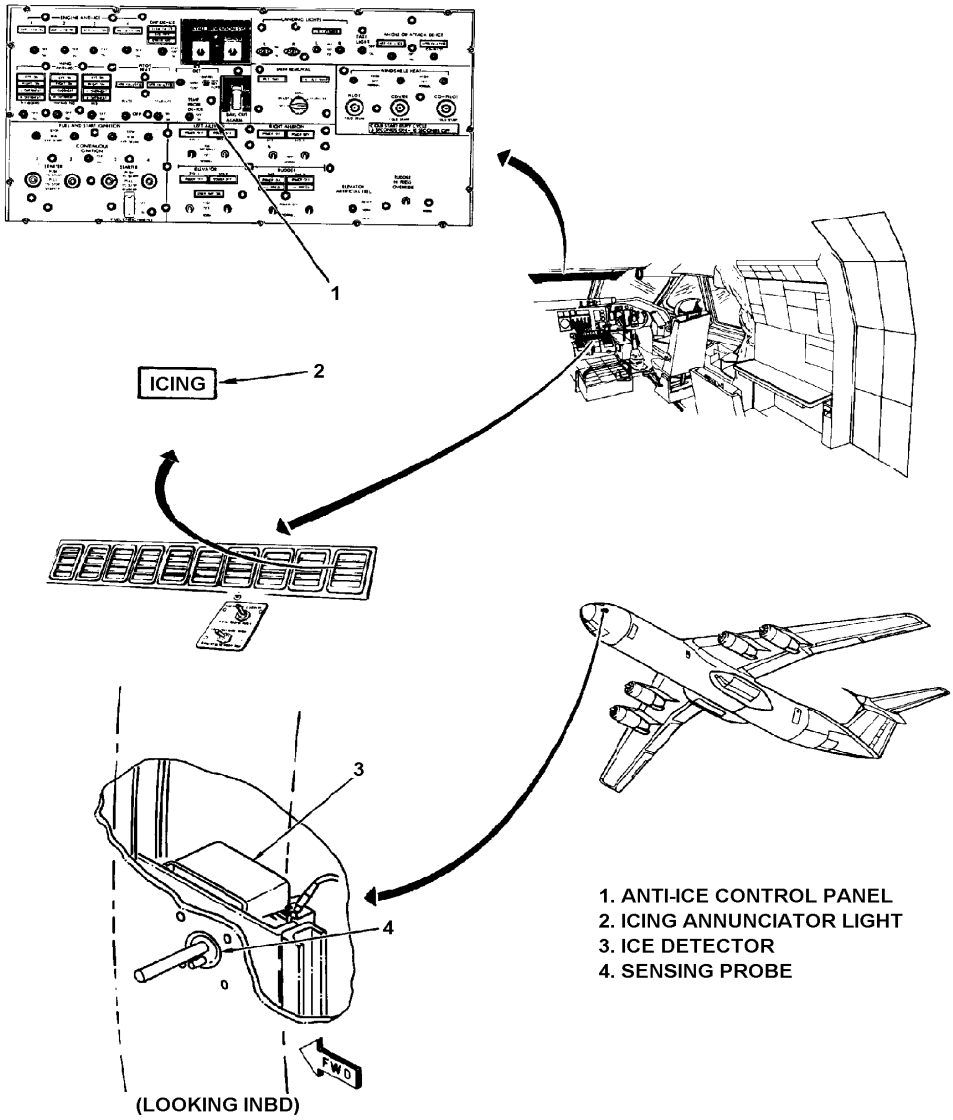

Ice Detection System Components

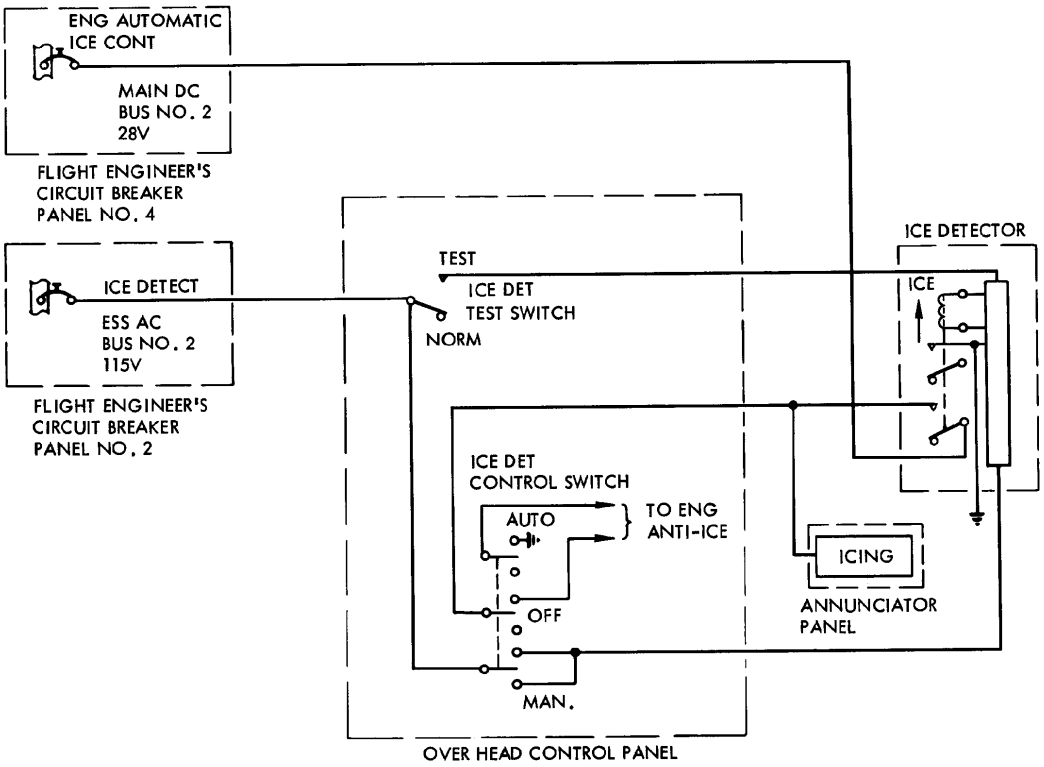

Ice Detection System Electrical Schematic Diagram

Engine Pressure Ratio (EPR) Probe Anti-Ice Subsystem

Integrated in each of the four EPR probes, located on each pylon, are anti-ice heating elements which provide pressure input to their corresponding EPR indicator. Each EPR probe is heated electrically for anti-icing. Three switches on the pilot's/copilot's overhead panel, ENGINE ANTI-ICE 1, PITOT HEAT PILOT, and ICE DET CONTROL, are capable of activating the EPR probe anti-ice system. The EPR probe anti-ice system will automatically come on if the ICE DET CONTROL switch is in AUTO and icing conditions are detected. When the probes' heating elements are energized and heated, ice accumulation is removed from the probes.

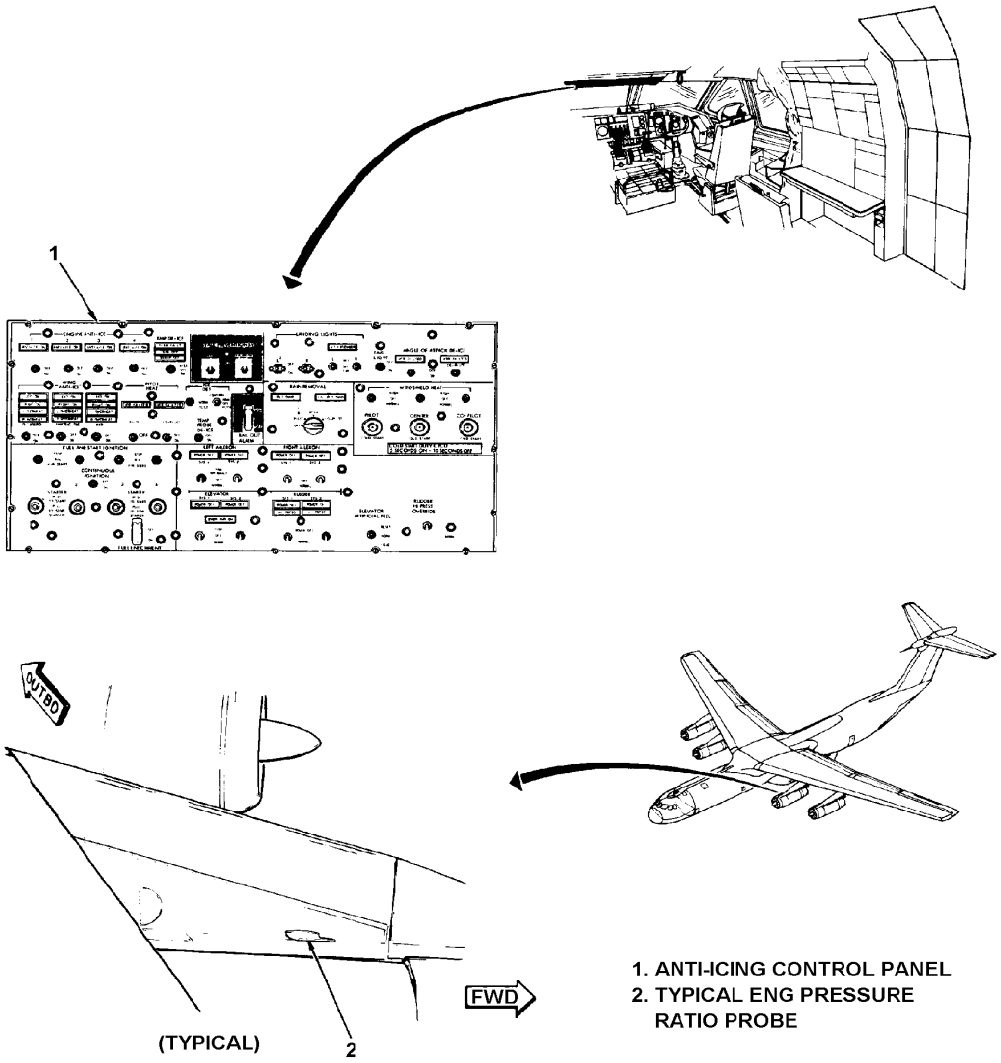

Engine Pressure Ratio (EPR) Probe Anti-Ice System Components

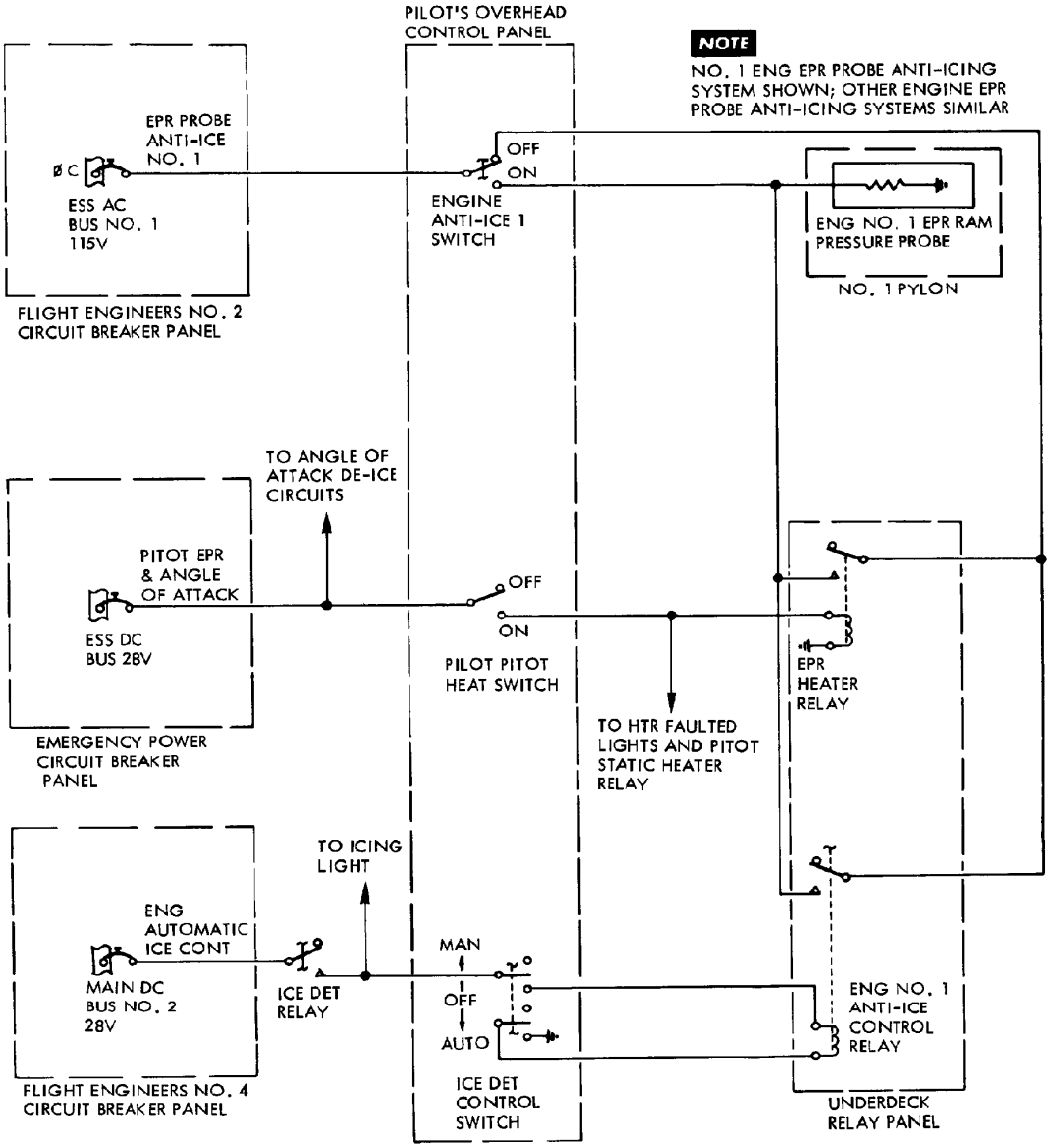

Engine Pressure Ratio (EPR) Probe Anti-Ice Electrical Schematic Diagram

INDICATING AND RECORDING SYSTEM

General Description

The indicating and recording system includes the cockpit voice recorder (CVR), digital flight data recorder (DFDR), life history recorder system (LHRS), and takeoff warning system. The recorders provide data about the airplane and its systems for accident investigation data, stress data, and airplane usage data. The takeoff warning system provides a visual cue that the airplane is configured for takeoff.

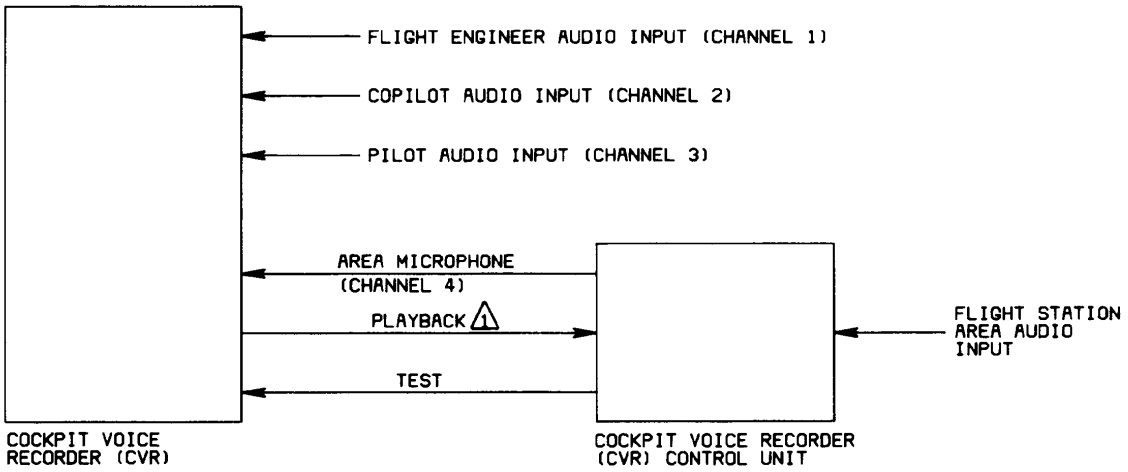

NOTE

1 PLAYBACK MONITORED ON HEADSET MONITOR JACK AND METER ON CONTROL UNIT.

Cockpit Voice Recorder (CVR) System Block Diagram

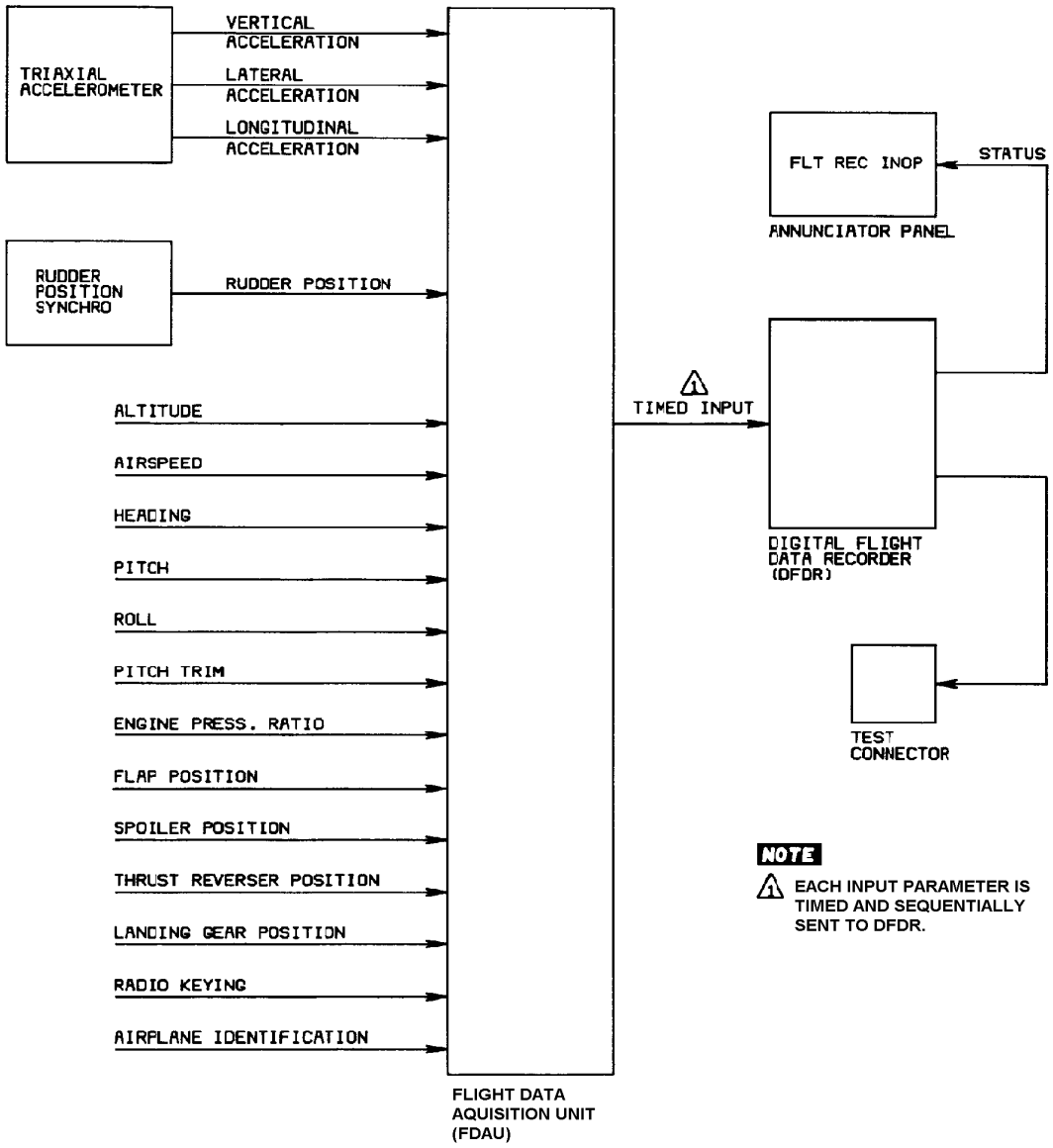

Digital Flight Data Recorder (DFDR) System Block Diagram

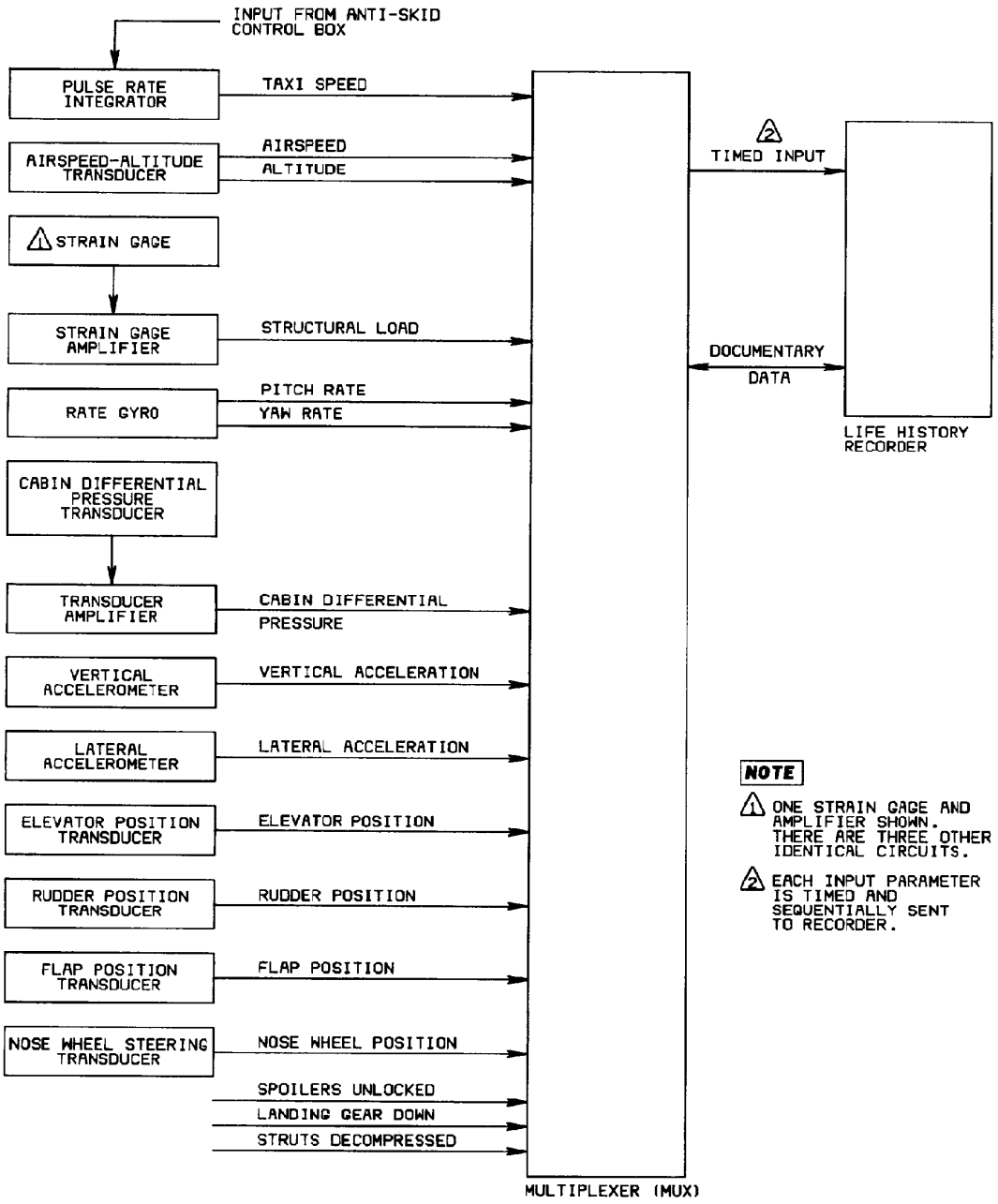

Life History Recorder System (LHRS) Block Diagram

Cockpit Voice Recorder (CVR) System

The CVR system uses a magnetic tape recorder to automatically record the latest 30 minutes of communications between flight station crew members. Previous audio is recorded over by current data. The recorder is located in the aft upper deck and is colored international orange. Inputs through the interphone system, either received or transmitted, by the pilot, copilot, or flight engineer are recorded. A CVR control unit in the overhead trim aft of the pilot's overhead panel contains an area microphone. The microphone picks up any audio in the flight station, amplifies the signal, then routes the result to the recorder. The system provides four separate channels for voice recording that originate at any of the four input stations. A test switch on the control unit initiates the test circuit in the recorder and provides a way to test the CVR system visually and audibly. Sequential tones of the four recording channels can be monitored by a headset plugged into the control unit. A meter also provides a visual indication of the test. The CVR system uses an external power interlock to prevent previously recorded data from being erased while the airplane is on the ground and external power is connected. A CVR TEST switch can be used to bypass the interlock for maintenance purposes. The CVR system operates automatically without affecting any of the airplane systems.

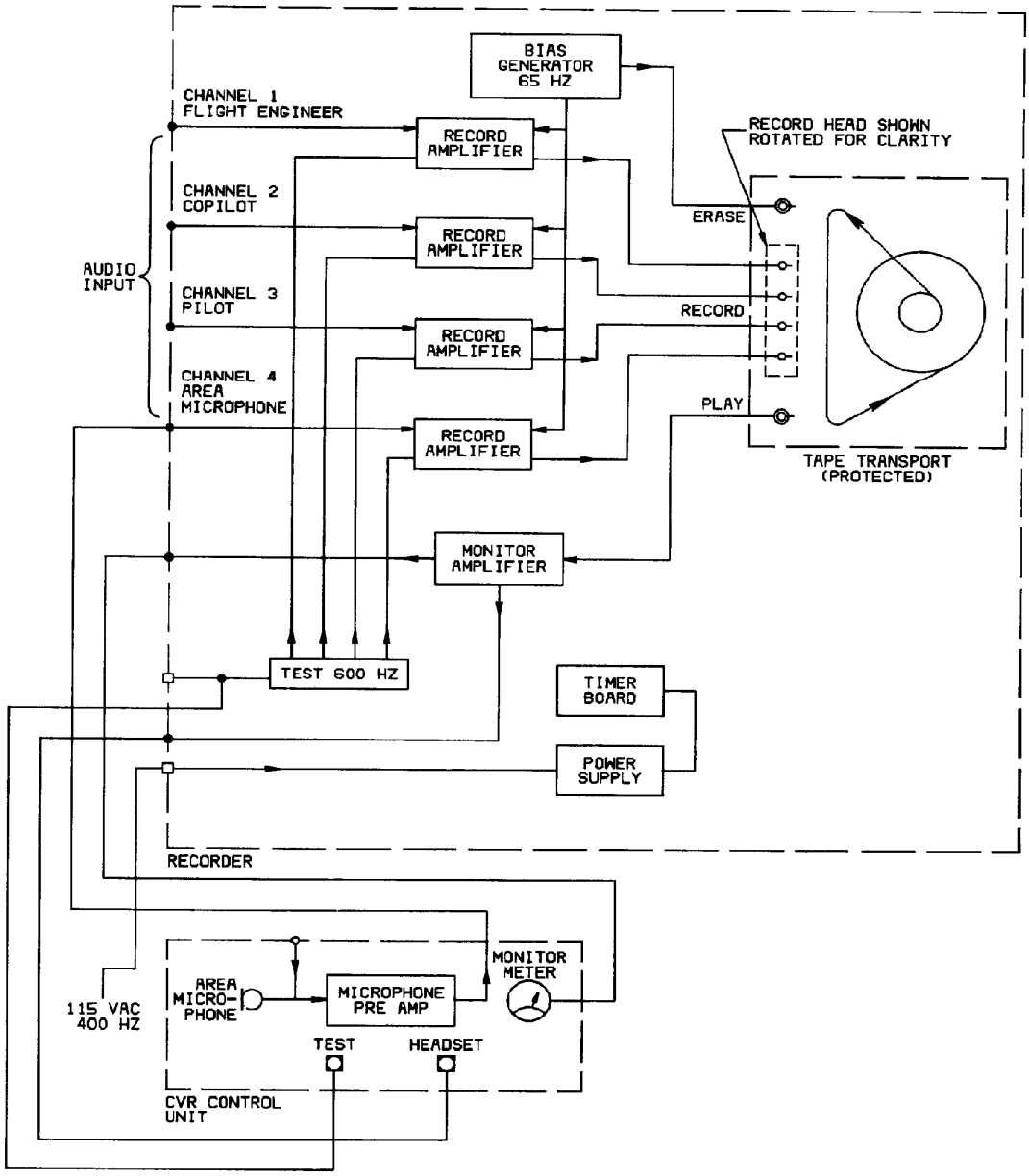

Cockpit Voice Recorder (CVR) System Schematic Diagram

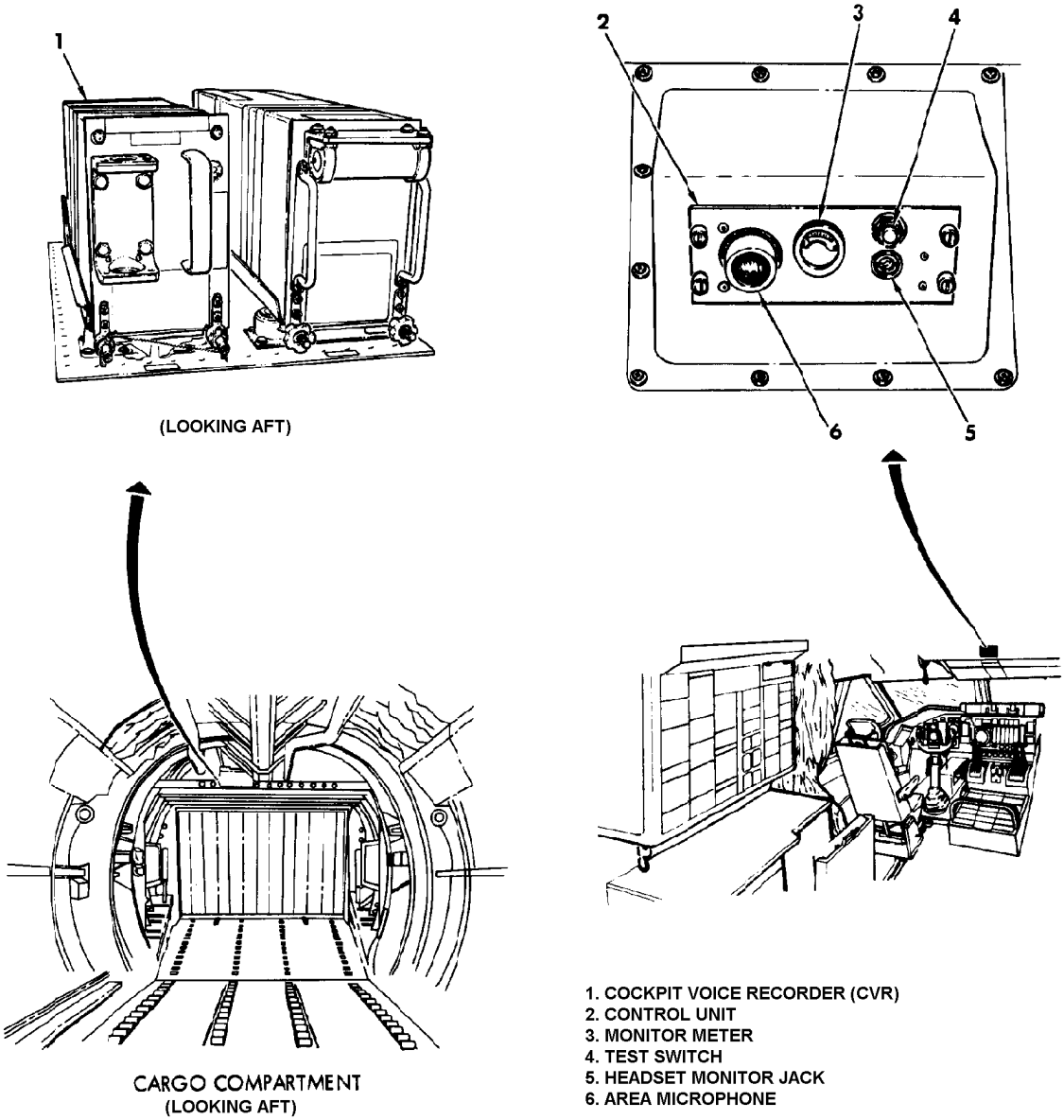

1. COCKPIT VOICE RECORDER (CVR)
2. CONTROL UNIT
3. MONITOR METER
4. TEST SWITCH
5. HEADSET MONITOR JACK
6. AREA MICROPHONE

Cockpit Voice Recorder (CVR) System Components

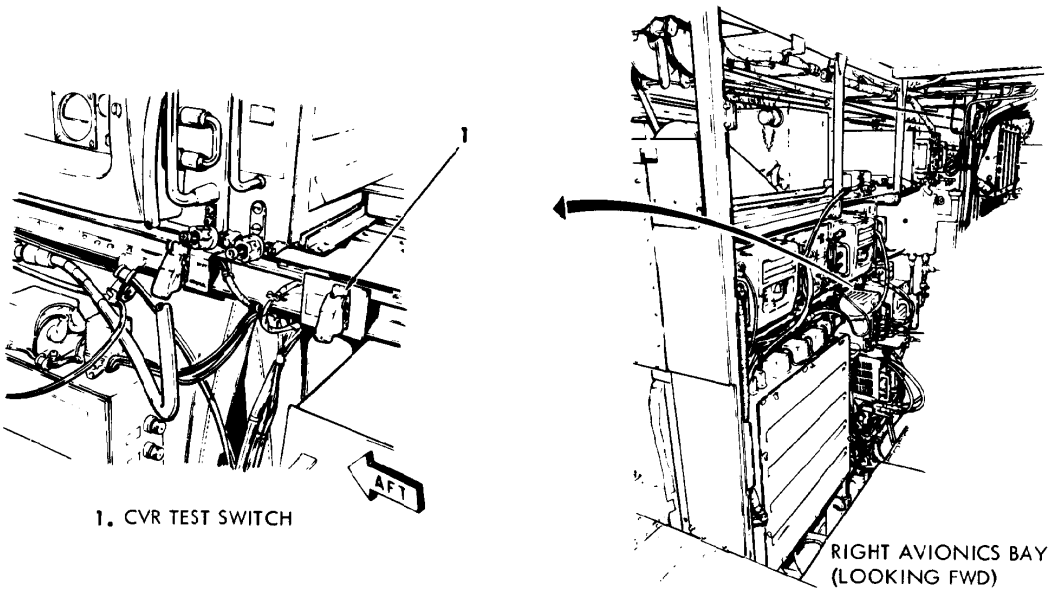

Cockpit Voice Recorder (CVR) Test Switch

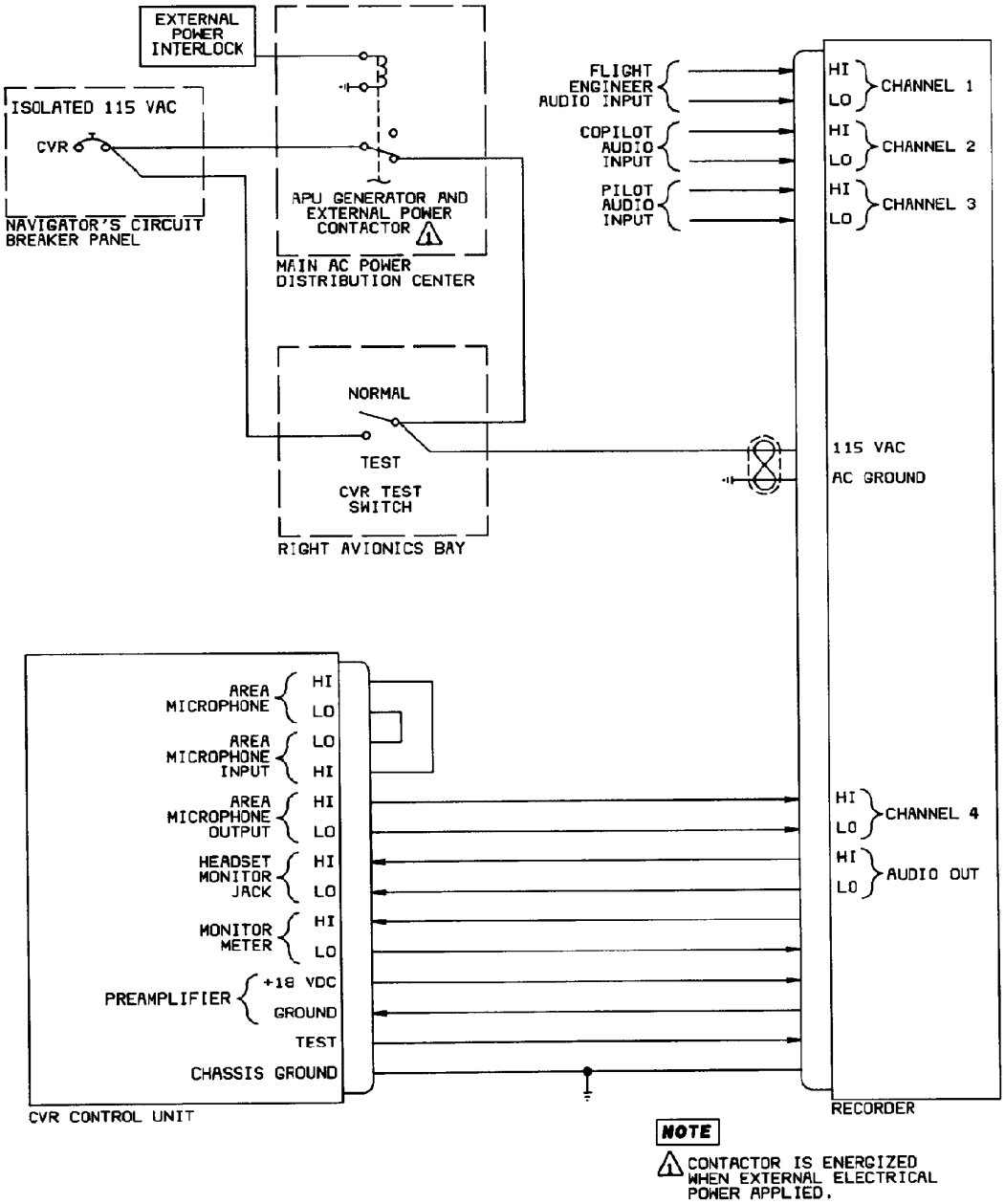

Cockpit Voice Recorder (CVR) System Electrical Schematic Diagram

Digital Flight Data Recorder (DFDR) System

The DFDR system records the latest 25 hours of airplane flight performance data. A recorder is located in the aft upper deck and is colored international orange. The recorder is located next to the CVR. Inputs to the recorder are received from a flight data acquisition unit (FDAU). The FDAU is located in the right avionics compartment and supplies the recorder with a timed sequential serial data stream. Input parameters to the FDAU (which are automatically recorded) come from 17 different airplane systems and in various signal forms. The parameters are: acceleration (vertical, lateral, and longitudinal), rudder position, altitude, airspeed, heading, pitch attitude, roll attitude, pitch trim, engine pressure ratio (EPR), flap position, spoiler position, thrust reversers extended, thrust reversers locked, landing gear position, radio keying, and airplane identification. All parameters are picked up from existing wiring in the various systems being monitored except for acceleration, rudder position, and airplane identification. Acceleration is measured by a single unit mounted on the center wing rear beam along the airplane center line. Rudder position is measured by a rudder position synchro mechanically connected to the rudder torque tube. Airplane identification is provided by wire jumpers to the FDAU. The only visual indication available to the flight crew for system status is a FLT REC INOP light on the annunciator panel. The DFDR operates automatically whenever the airplane is under its own electrical power. An external power interlock prevents previously recorded flight data from being erased while the airplane is on the ground and external power is connected. A FLT DATA REC TEST switch can be used to bypass the interlock for maintenance purposes. A test receptacle aft of the left troop door provides a point to connect a test set for system checkout. The receptacle can also be used to retrieve recorded data from the recorder without affecting the integrity of the tape. The DFDR system operates automatically without affecting the airplane systems being monitored.

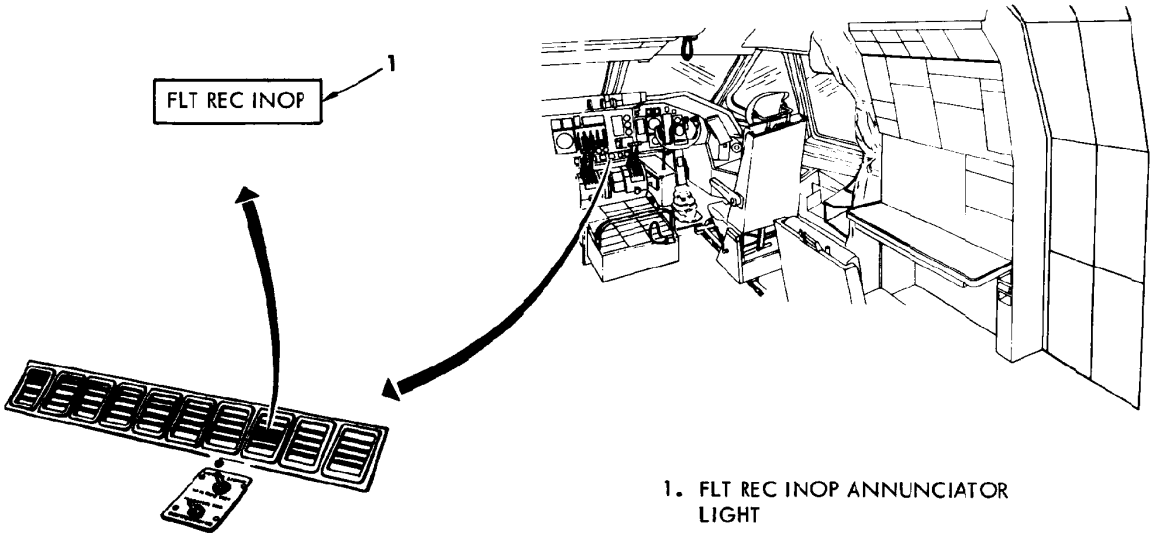

Flight Recorder Inoperative Annunciator Light

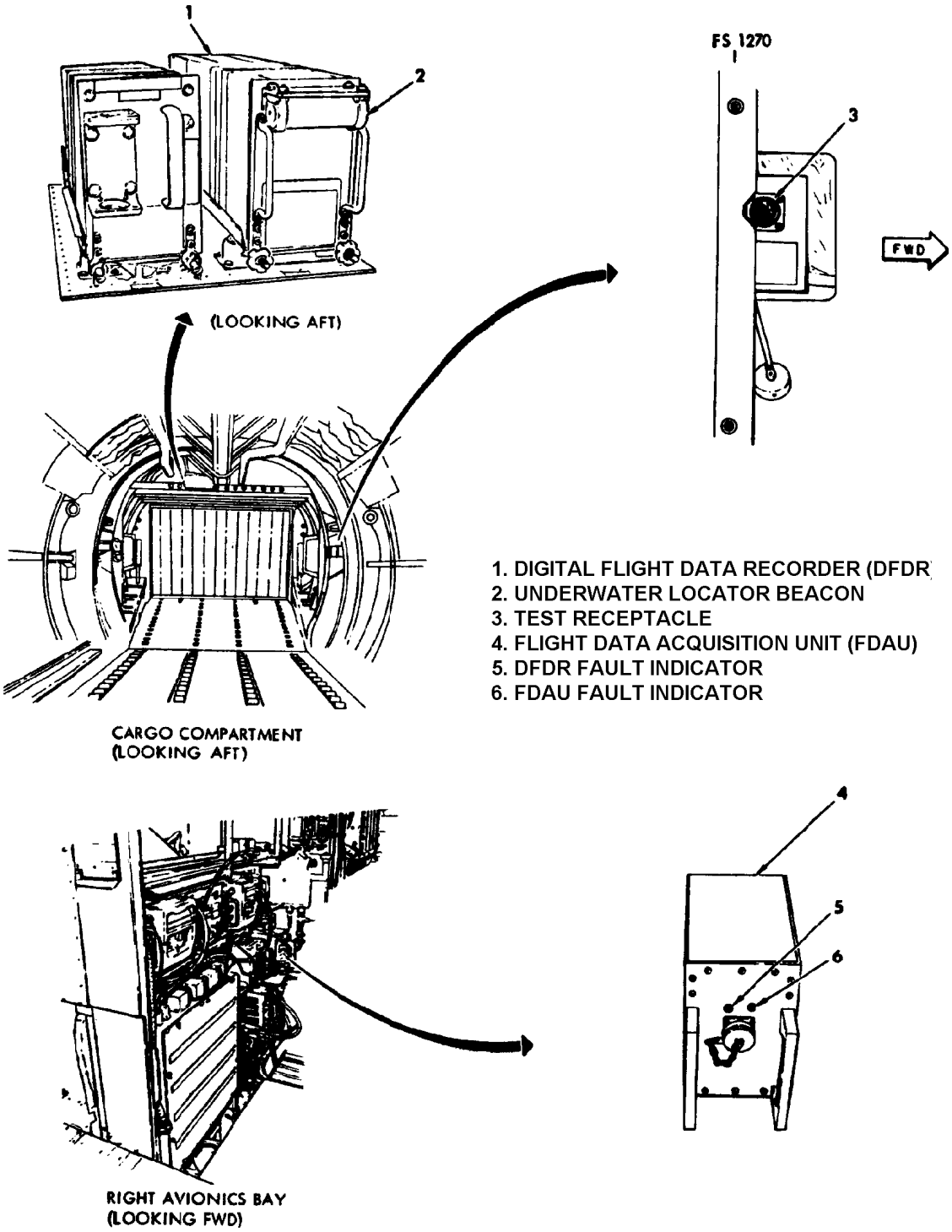

Digital Flight Data Recorder (DFDR) System Components

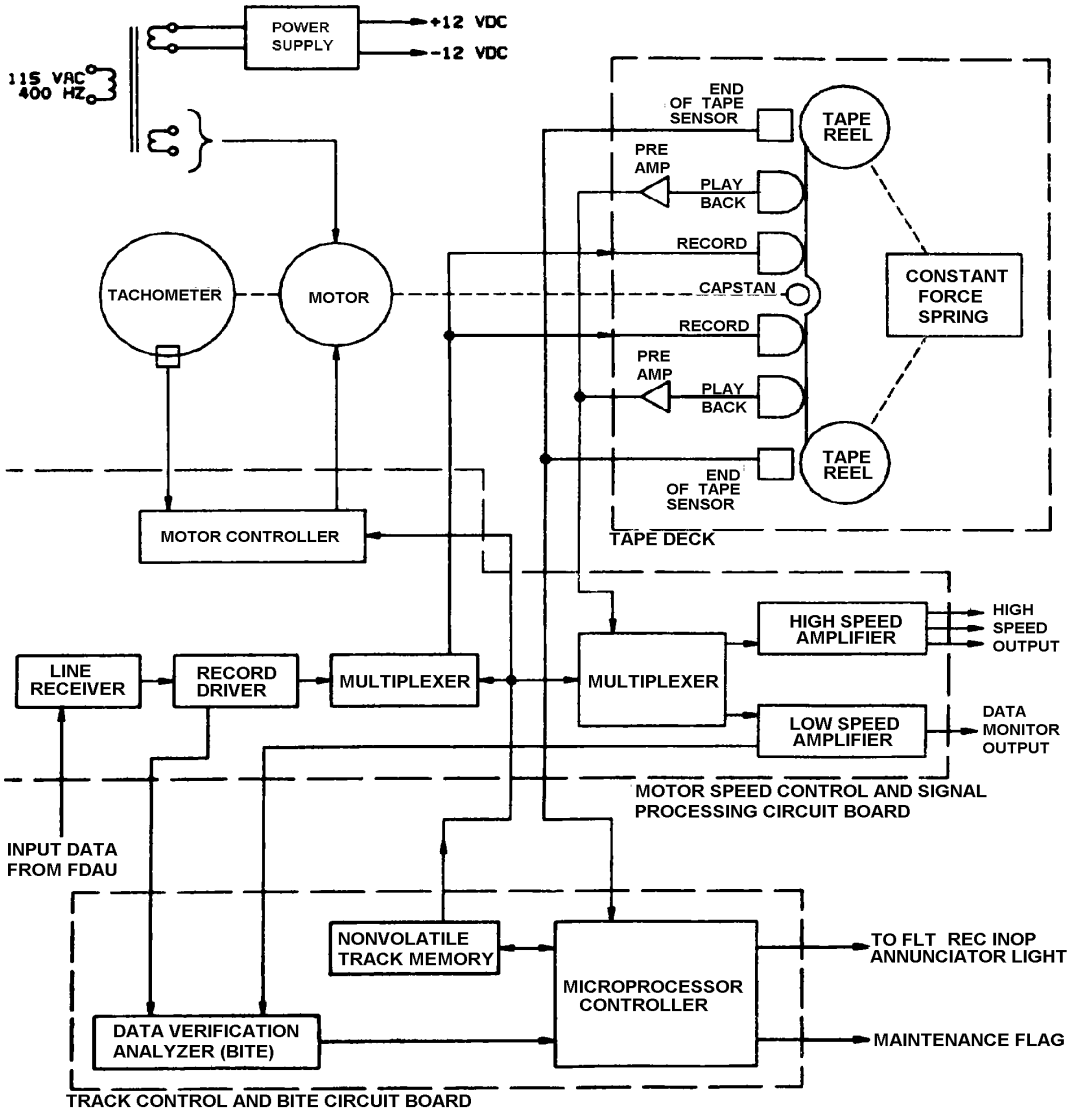

Digital Flight Data Recorder (DFDR) Schematic Diagram

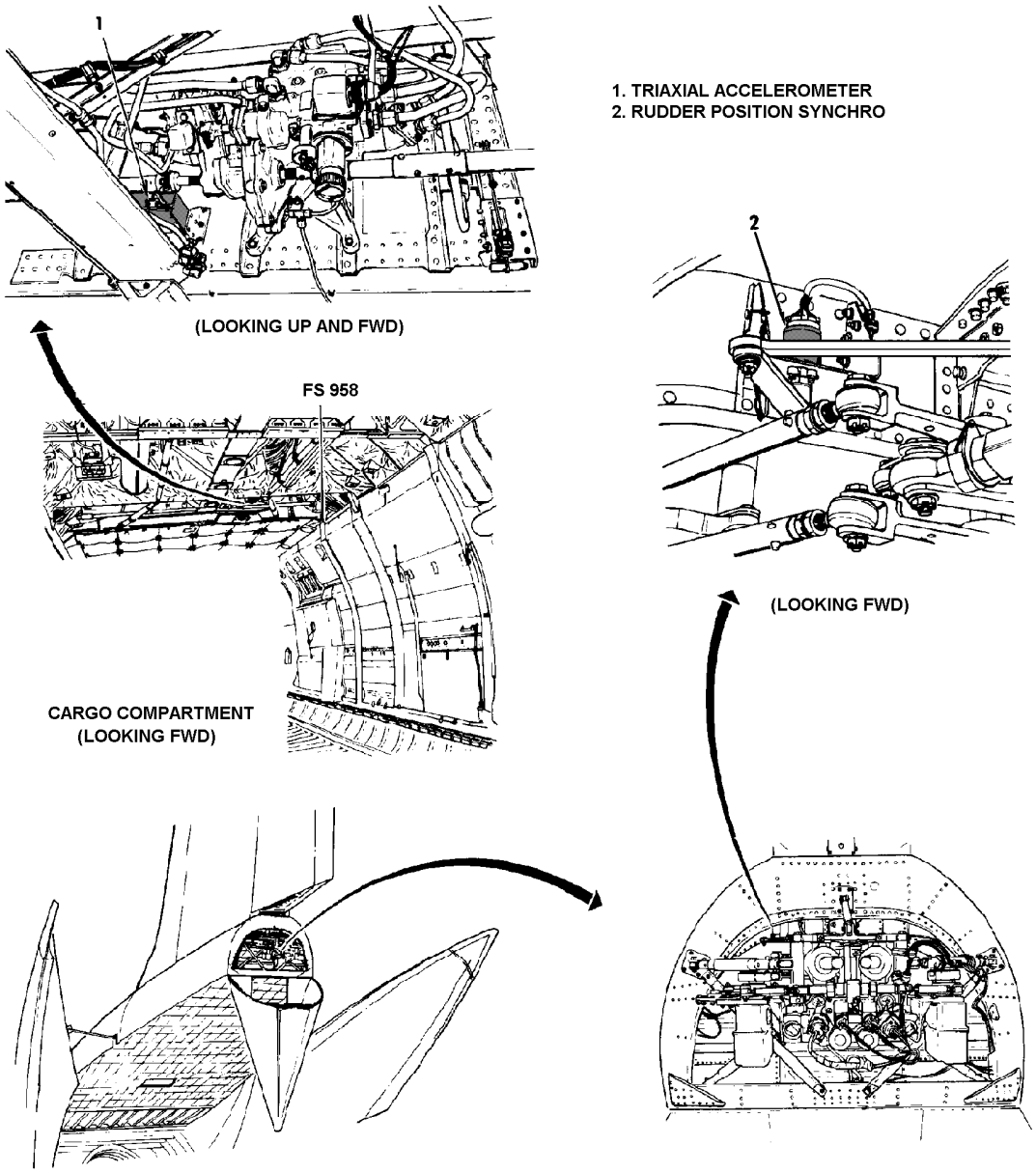

Triaxial Accelerometer and Rudder Position Synchro

Life History Recorder System (LHRS)

The LHRS system records airplane structural stress and usage data. The recorder is located in a systems rack behind the left crew rest seat. The multichannel system continuously records data, in a specific sequence, on Mylar based magnetic tape. The removable magnetic tape cartridge is capable of recording 15 hours of data. Sequenced inputs to the recorder are received from a multiplexer. The multiplexer receives data, in various signal forms, from portions of the airplane being monitored. The LHRS monitors 17 different parameters related to stress and usage. The multiplexer is located next to the recorder and supplies the recorder with a timed sequential serial data stream. Input parameters to the multiplexer come from strain gages, transducers, accelerometers, rate gyro, and pulse rate integrator. The input parameters are: taxi speed, airspeed, altitude, structural loads, pitch rate, yaw rate, cabin differential pressure, vertical acceleration, lateral acceleration, elevator position, rudder position, flap position, nose wheel position, spoilers position (unlocked), landing gear position (struts decompressed, gear up/down) and airplane documentary data. All these inputs are analog signals except for landing gear and spoiler events. Discrete signals are used for spoiler and landing gear events. Transducers are used for airspeed and altitude, cabin differential pressure, elevator position, rudder position, flap position, and nose wheel position. Taxi speed uses a pulse rate integrator to interpret signals from the anti-skid control box.

Structural loads are monitored by four strategically placed strain gages. Pitch and yaw rates are monitored by a rate gyro. Acceleration is monitored by two accelerometers. Input signals for structural loads and cabin differential pressure go through rack mounted amplifiers before entering the multiplexer. The recorder is capable of performing a self test and indicating whether the recorder, multiplexer, or documentary data has failed. The recorder also has a built-in TEST switch to check out the system. Documentary data input to the recorder identifies characteristics of the airplane and its mission. All input signals are routed directly to the multiplexer except for two signal types. The strain gages and cabin differential pressure transducer are amplified before entering the multiplexer. A LHRS OFF light next to the engine instruments on the flight engineer’s station indicates the on/off status of the LHRS. The light comes on when power is applied to the airplane and the LHRS is not turned on. The light goes off as soon as the system is turned on. The power switch is provided so the system can be manually turned on and off. During normal operation, the LHRS does not interfere with the operation of any of the airplane systems.

1. NULL POTENTIOMETER
2. INPUT POTENTIOMETER
3. GAIN CONTROL
4. BRIDGE SWITCH
5. OUTPUT POTENTIOMETER
6. AMPLIFIER NO. 4
7. AMPLIFIER NO. 5
8. AMPLIFIER NO. 6
9. AMPLIFIER NO. 3 (NOT USED)
10. AMPLIFIER NO. 2
11. AMPLIFIER NO. 1
12. RATE PULSE INTEGRATOR
13. MULTIPLEXER
14. LIFE HISTORY RECORDER
15. POWER SWITCH
16. CABIN PRESSURE DIFFERENTIAL TRANSDUCER
17. AIRSPEED - ALTITUDE TRANSDUCER
18. LHRS OFF LIGHT

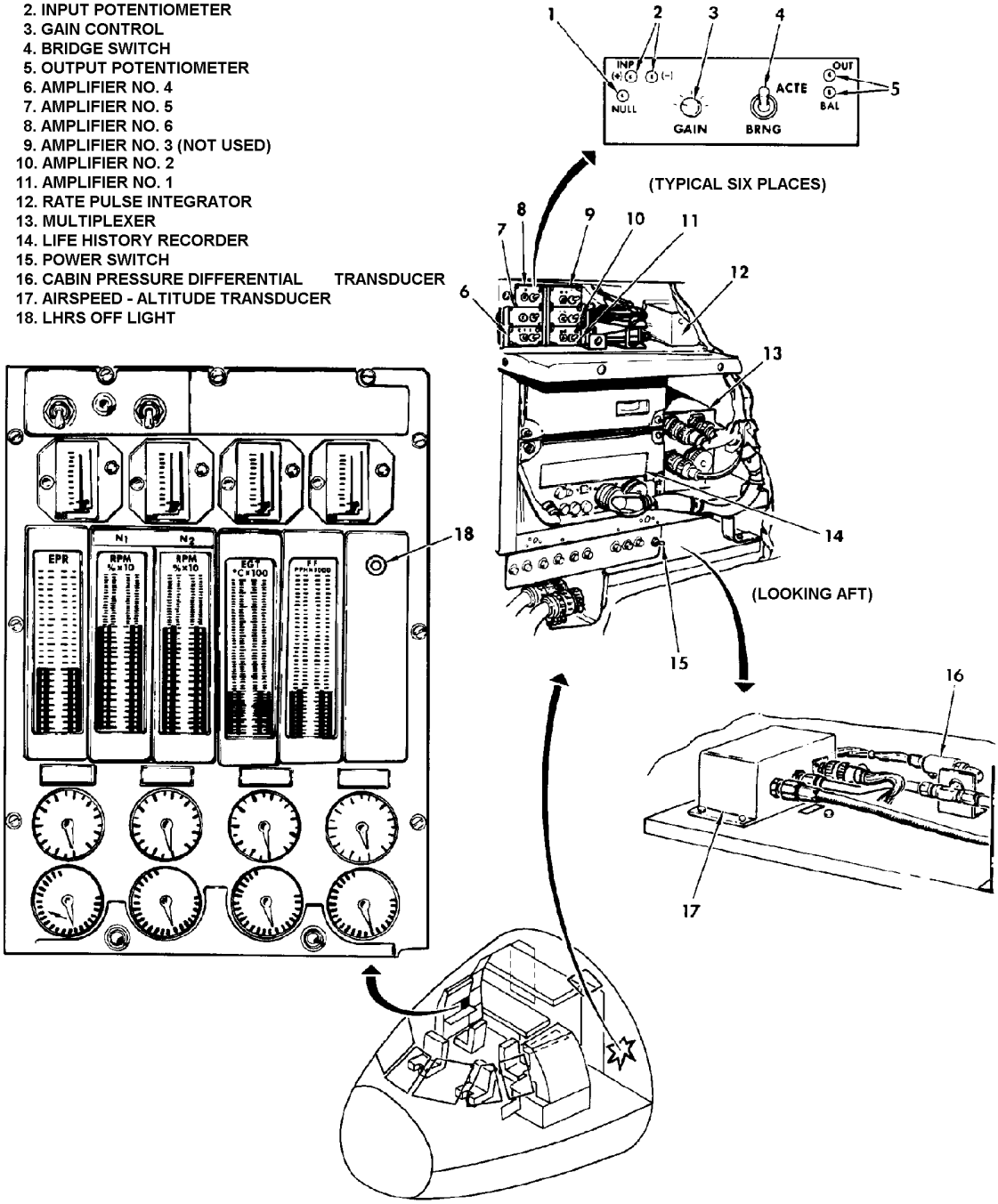

Life History Recorder System (LHRS) Flight Station Components (Sheet 1 of 2)

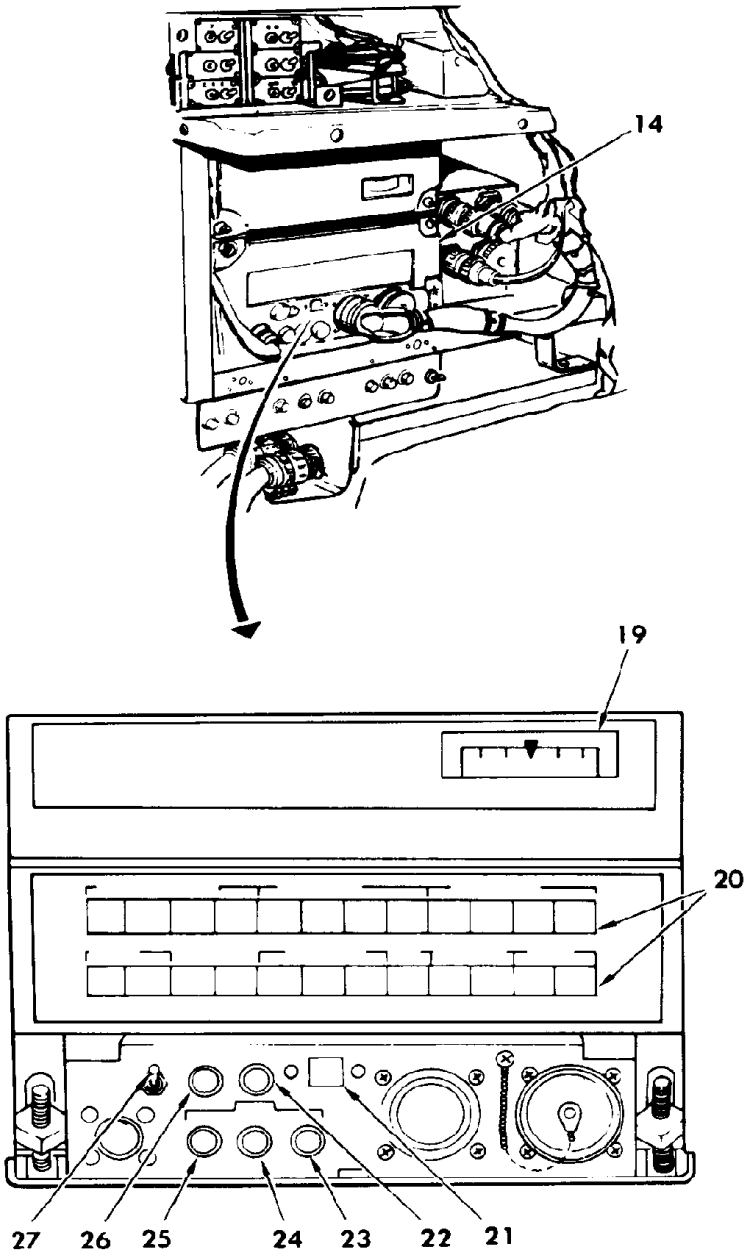

14. LIFE HISTORY RECORDER
19. PERCENT TAPE REMAINING INDICATOR
20. DOCUMENTARY DATA SWITCHES
21. ELAPSED TIME INDICATOR
22. TEST SWITCH
23. REC FAILURE LIGHT
24. SUP DATA FAILURE LIGHT
25. MUX FAILURE LIGHT
26. TEST LIGHT
27. CAL DEACTIVATE SWITCH

Life History Recorder System (LHRS) Flight Station Components (Sheet 2 of 2)

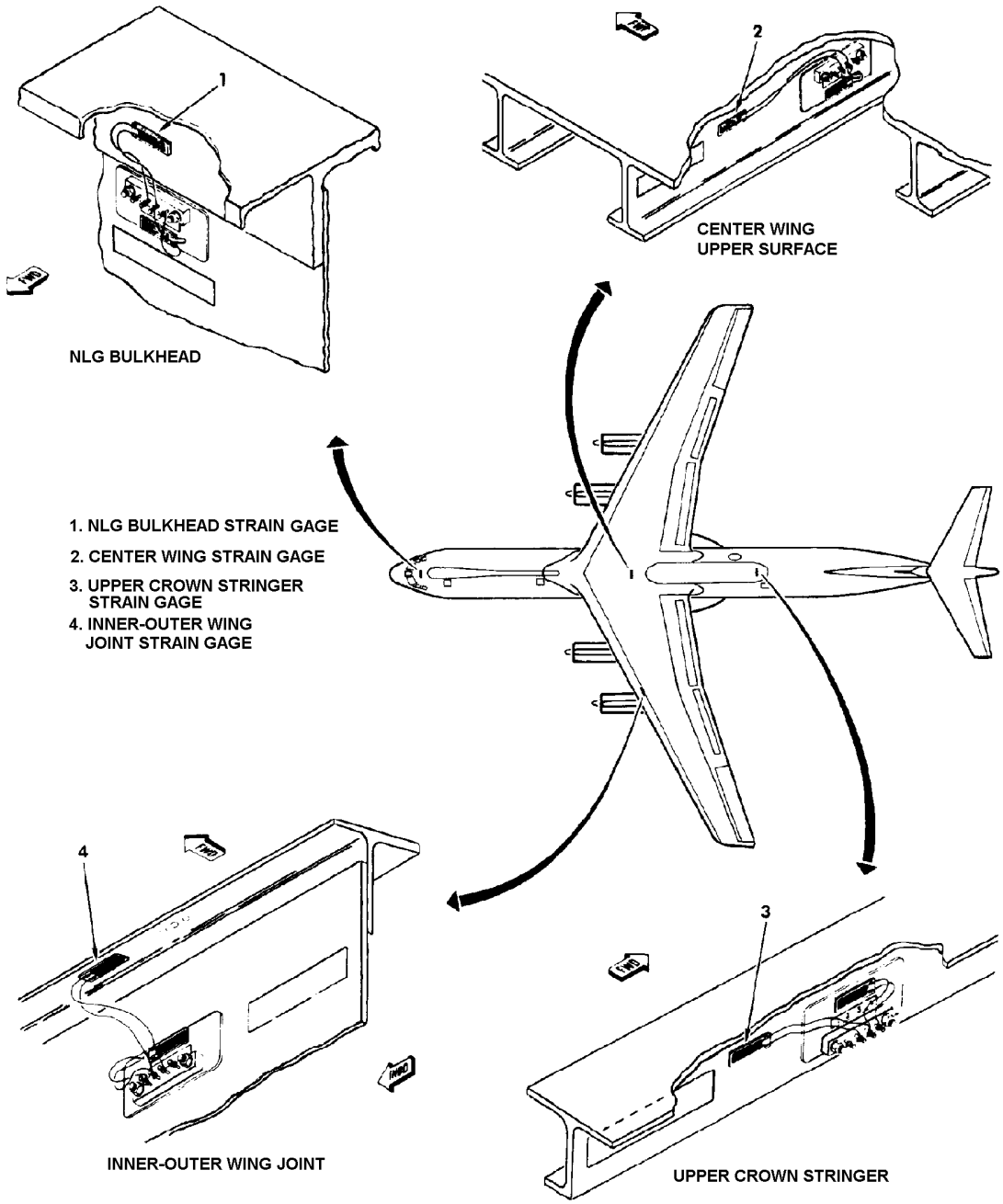

Strain Gages

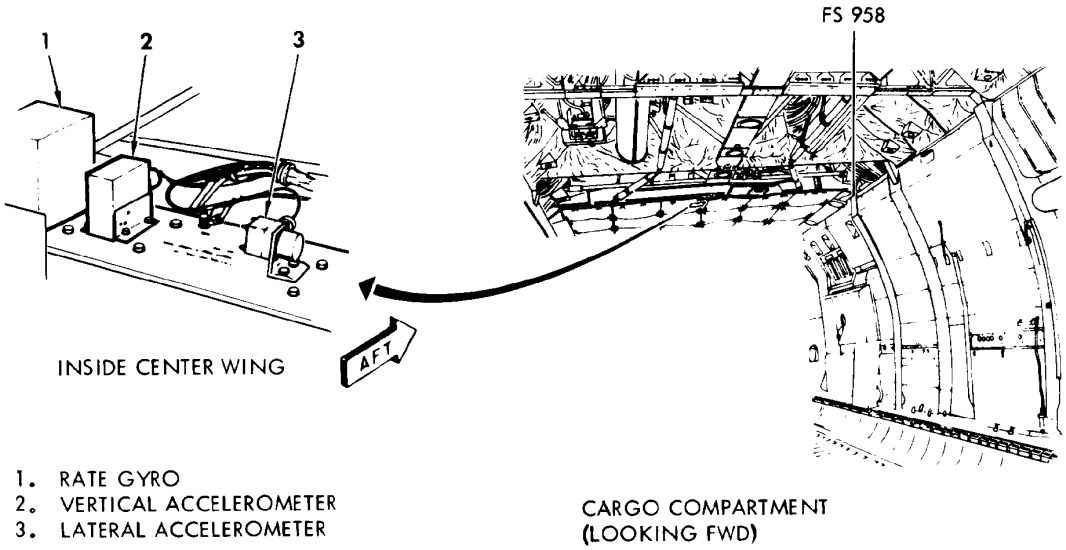

Accelerometers and Rate Gyro

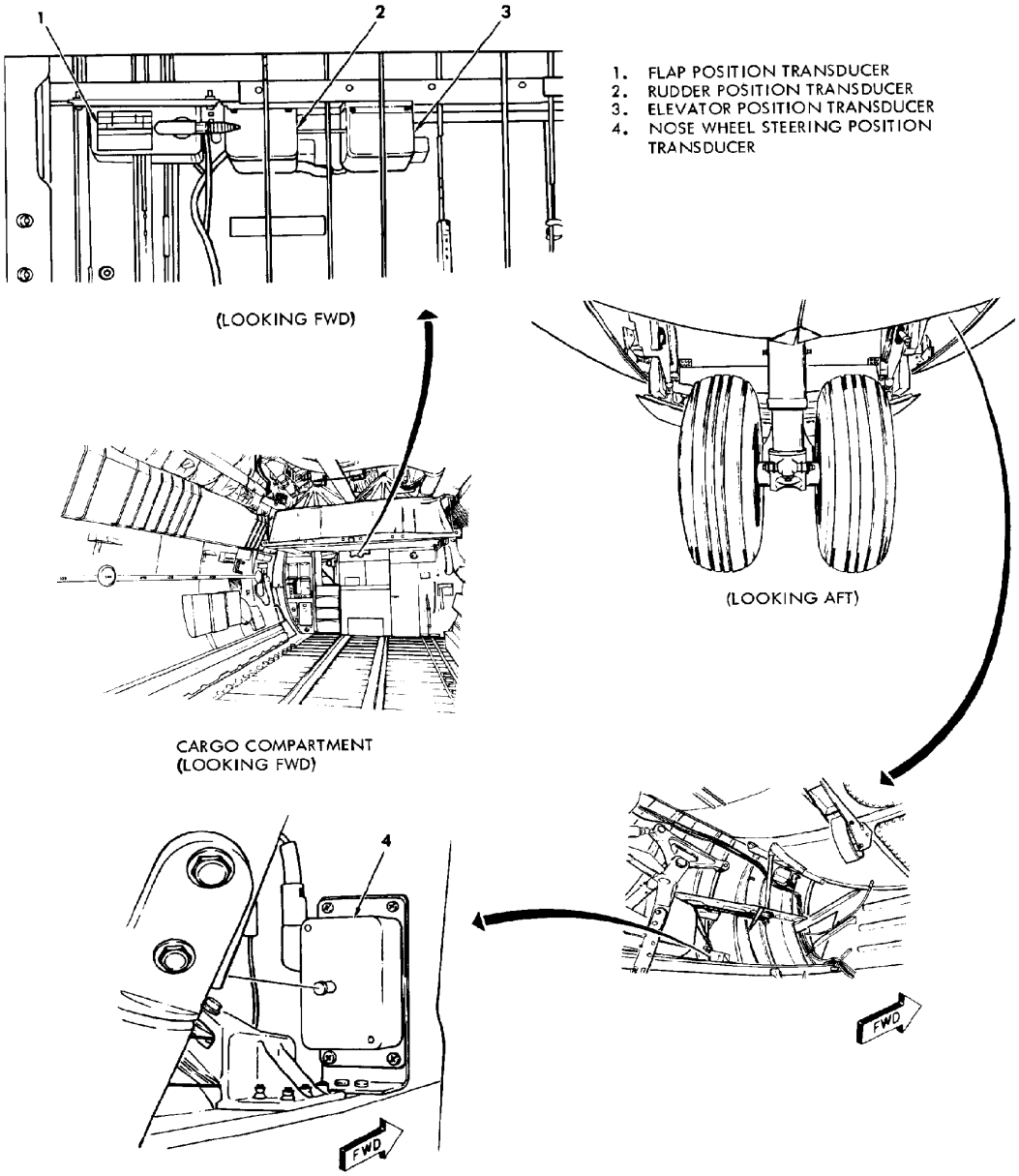

Life History Recorder System (LHRS) Position Transducers

Takeoff Warning System

The takeoff warning system provides a visual indication that certain airplane systems are in their normal position prior to takeoff. A green TAKEOFF warning light comes on when the systems are normal and the button on the hydraulic pitch trim lever is depressed and released. Most of the system consists of relays that are controlled by the monitored systems. When the systems are in their normal position, the following conditions are met: isolated AC avionics bus is powered, isolated AC bus is powered, main DC buses No. 1 and No. 2 are powered, spoilers are closed and locked, all thrust reversers are stowed and locked, flaps are in takeoff position, autopilot is off, all external doors are closed and locked, and the spoiler handle is armed.

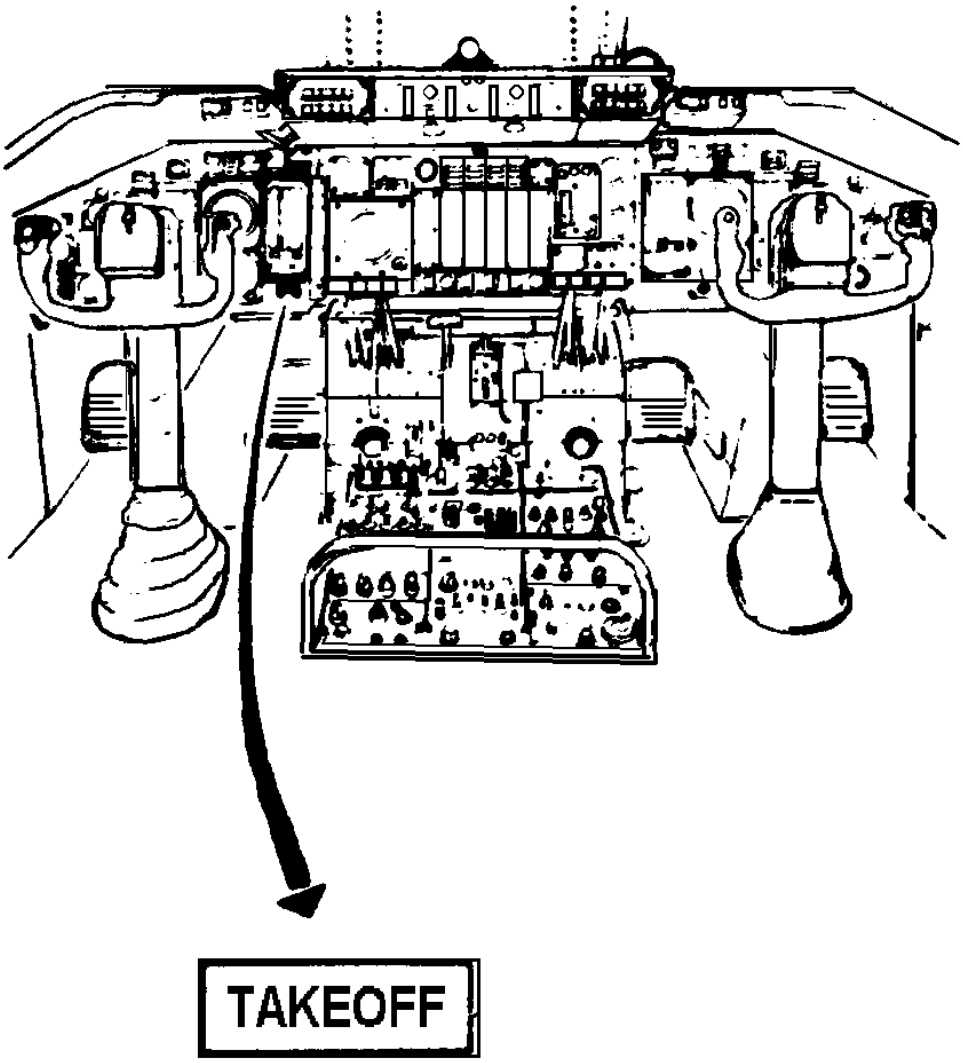

Takeoff Warning Light

LANDING GEAR SYSTEM

General Description

The landing gear is a modified tricycle design with a steerable, two-wheel nose gear and two bogie-type, four-wheel main gear. All three landing gears are fully retractable. Hydraulic actuators retract the gear up and forward. The wheel well doors are connected to the landing gear by rods and torque tubes, causing the doors to open as the gear extends and to close as it retracts. The two main landing gears (MLG) have disc brakes on each wheel. An anti-skid system is used to improve braking performance. The nose landing gear (NLG) is steered hydraulically. Normal hydraulic power for extension, retraction, braking, and steering is provided by the No. 2 hydraulic system.

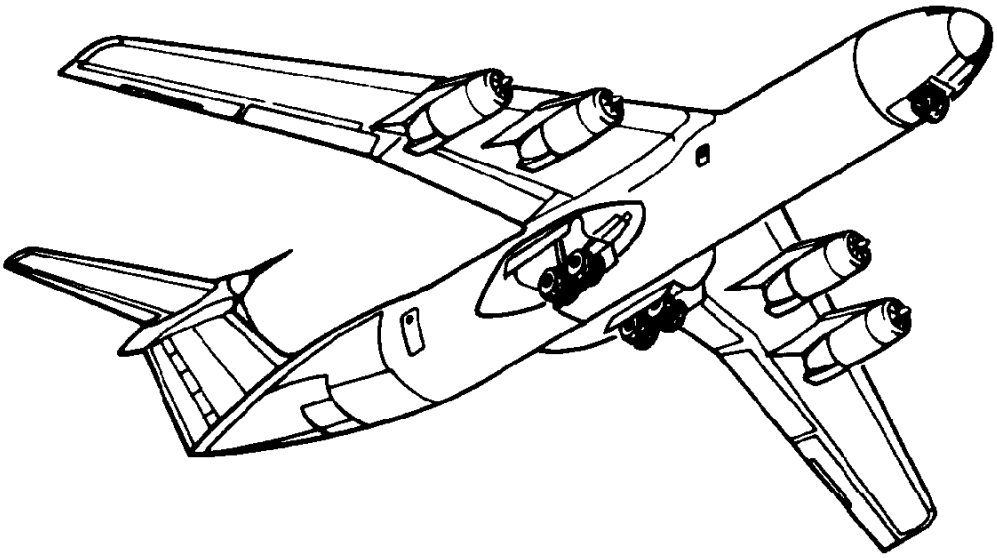

Landing Gear

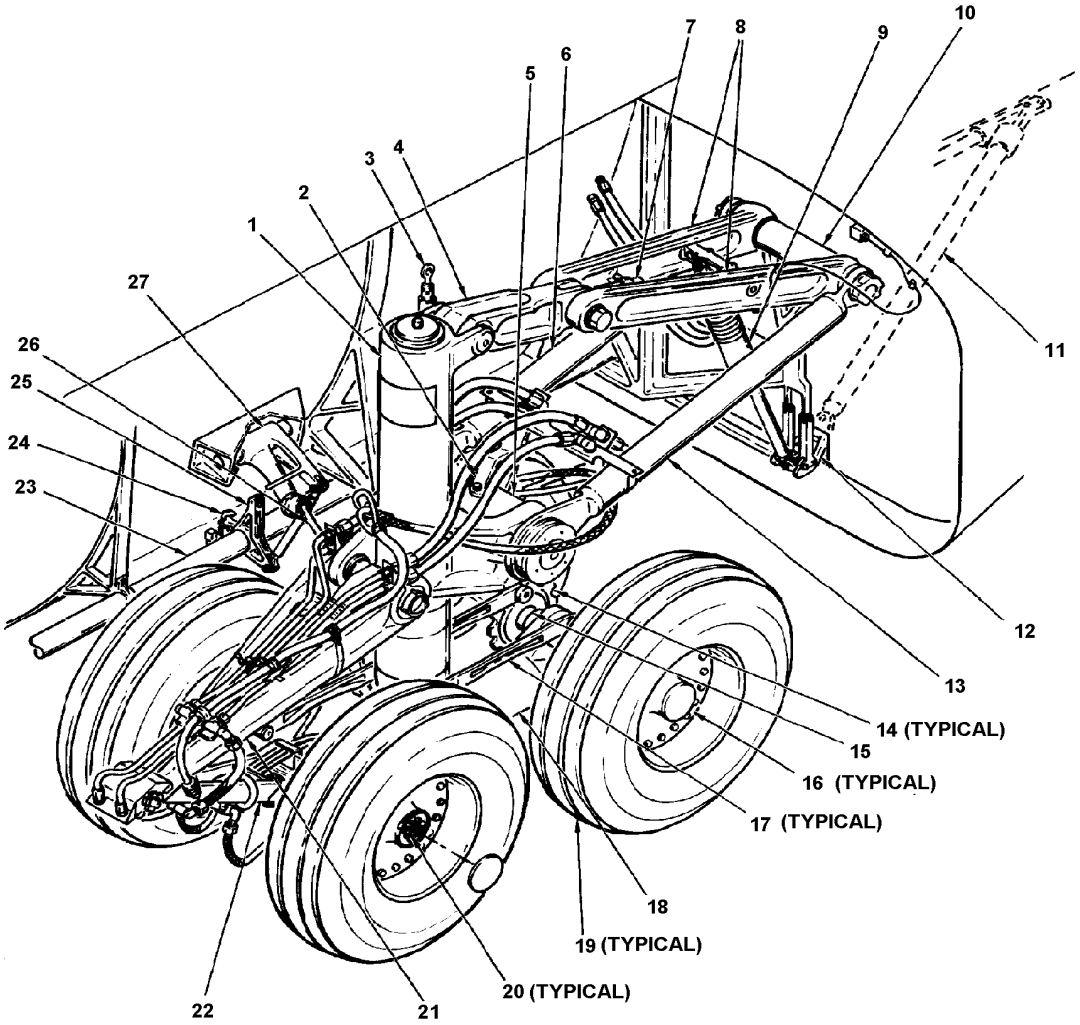

1. SHOCK STRUT
2. LOWER DRAG BRACE
3. OLEO DOOR PUSHROD
4. FORWARD UPPER DRAG BRACE
5. TRUNNION SHAFT
6. INBOARD LOWER DRAG BRACE
7. DOWNLOCK ACTUATOR
8. AFT UPPER DRAG BRACE
9. MLG ACTUATOR
10. ATTACH LINE LINK ASSEMBLY
11. TUBE BRACE
12. YOKE
13. OUTBOARD LOWER DRAG BRACE
14. BRAKE ASSEMBLY
15. AFT AXLE
16. WHEEL ASSEMBLY
17. BRAKE TORQUE LINK
18. AXLE BEAM
19. TIRE
20. ANTI-SKID DETECTOR
21. UPPER TORQUE ARM
22. LOWER TORQUE ARM
23. TORQUE TUBE
24. UPLOCK ASSEMBLY
25. UPLOCK BELLCRANK
26. BELLCRANK DRIVE BALLJOINT ASSEMBLY
27. BELLCRANK ASSEMBLY

Main Landing Gear (MLG)

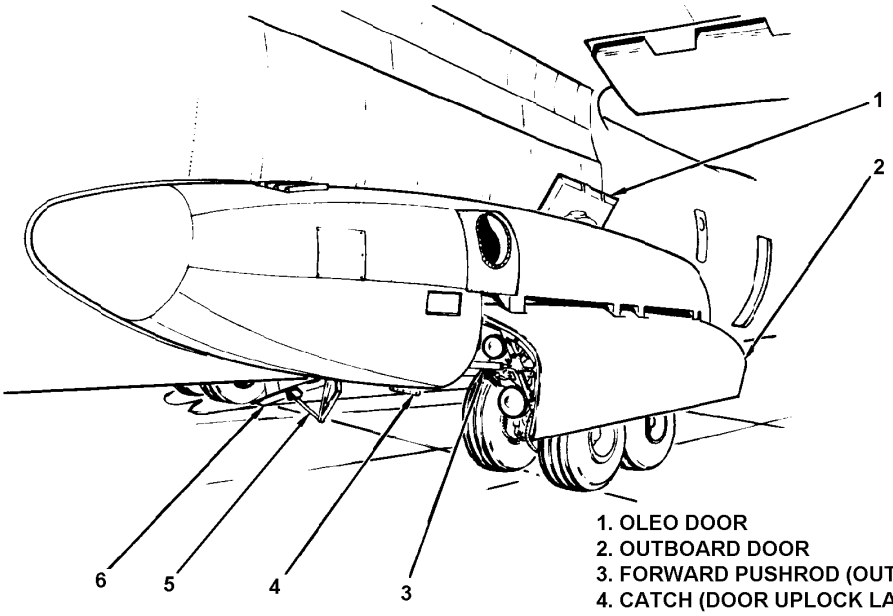

1. OLEO DOOR
2. OUTBOARD DOOR
3. FORWARD PUSHROD (OUTBOARD DOOR)
4. CATCH (DOOR UPLOCK LATCH ASSEMBLY)
5. FORWARD PUSHROD (INBOARD DOOR)
6. INBOARD DOOR

Main Landing Gear (MLG) Doors

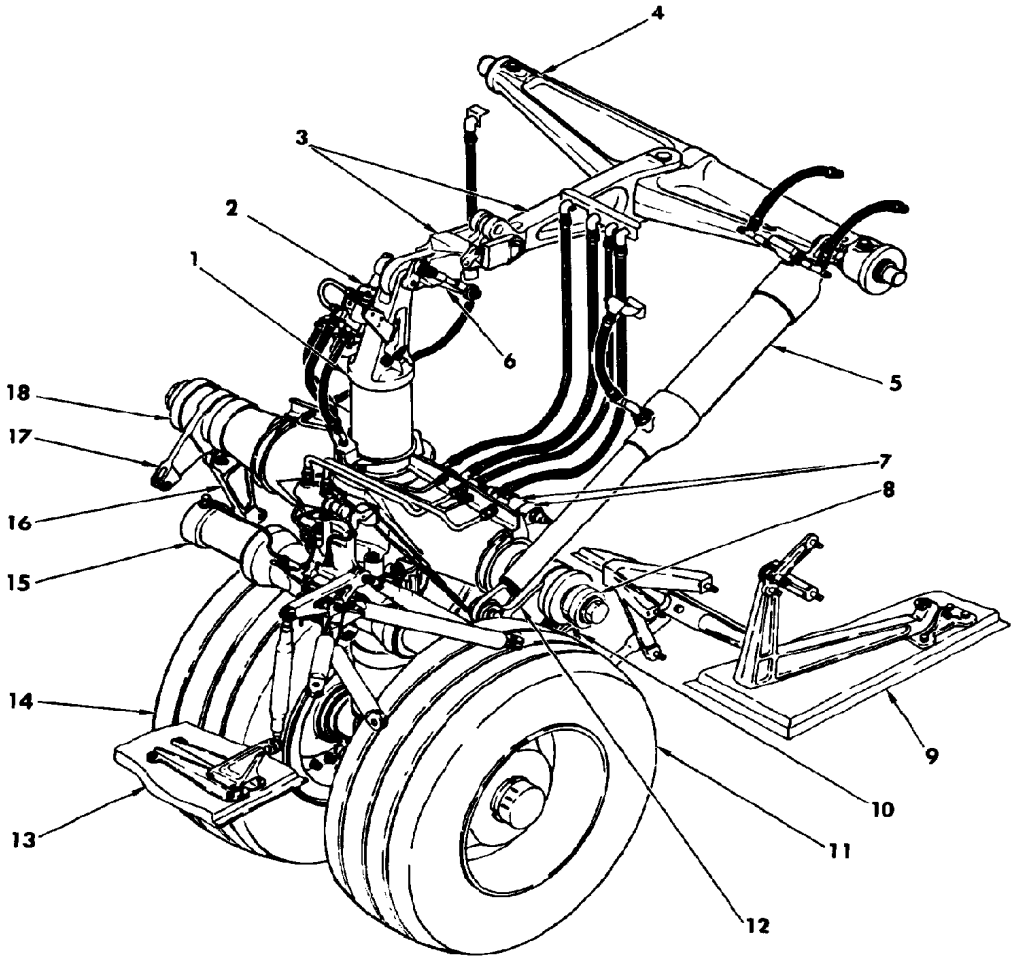

1. SHOCK STRUT
2. UP/DOWN LOCK ACTUATOR
3. DRAG BRACE ASSEMBLY
4. TRUNNION
5. HYDRAULIC ACTUATOR
6. UP/DOWN LOCK MECHANISM
7. TORQUE ARM ASSEMBLY
8. BEARINGS
9. AFT DOOR
10. LH BELLCRANK (AFT DOOR)
11. LH WHEEL AND TIRE ASSEMBLY
12. BELLCRANK (LH FORWARD DOOR)
13. LH FORWARD DOOR
14. RH WHEEL AND TIRE ASSEMBLY
15. STEERING ACTUATOR
16. RH BELLCRANK (AFT DOOR)
17. BELLCRANK (RH FORWARD DOOR)
18. SHOCK STRUT TRUNNION

Nose Landing Gear (NLG)

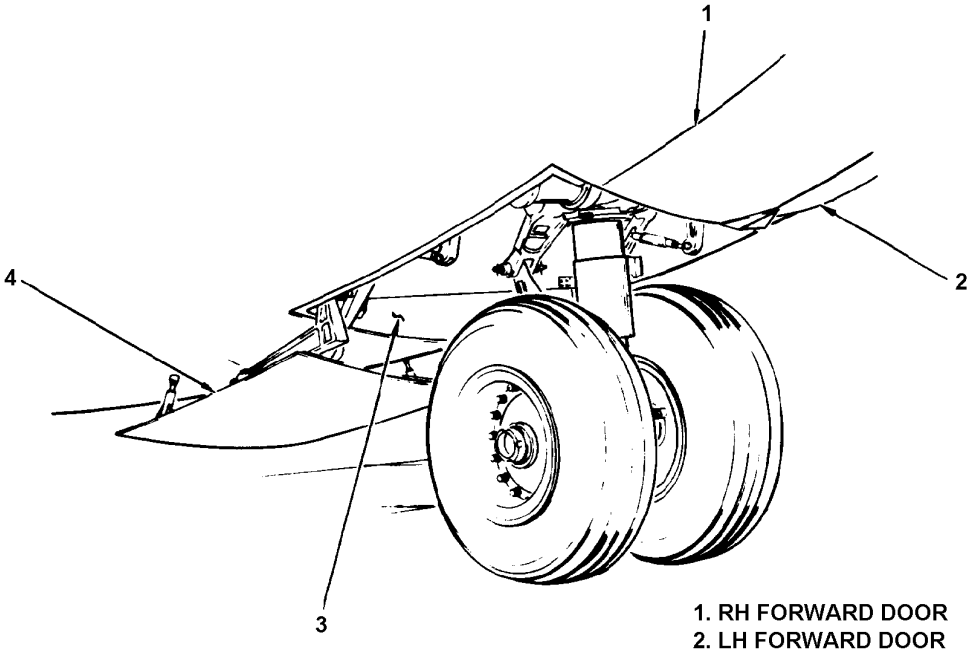

1. RH FORWARD DOOR
2. LH FORWARD DOOR
3. AERODYNAMIC BAFFLE DOOR
4. AFT DOOR

Nose Landing Gear (NLG) Doors

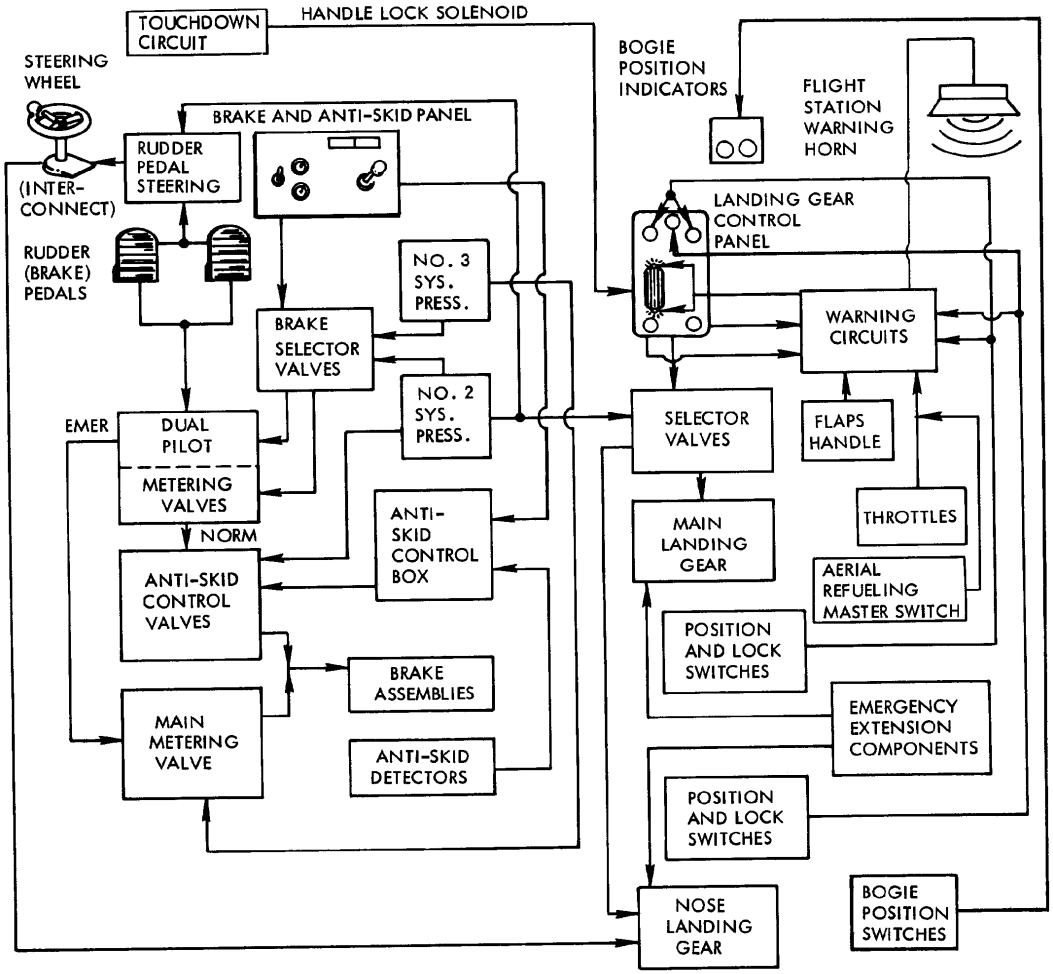

Landing Gear System Functional Flow Diagram

Main Landing Gear (MLG) and Doors Subsystem

The MLG's are installed in pods on the left and right sides of the lower center fuselage. There are four wheels on each of the two bogie-type main gears. The gears are fully retractable using hydraulic power from the No. 2 hydraulic system. Hydraulically actuated mechanical locks secure the MLG in the fully extended and fully retracted positions. Each wheel contains a hydraulically actuated brake assembly. Each MLG pod has three doors: an outboard door, an inboard door, and an oleo door. The outboard door opens down and outboard, and the inboard door opens down and inboard.

The oleo door is in the top of the pod and opens up and inboard. All three doors are connected to the MLG through mechanical linkage, which causes them to open and close as the gear is extended and retracted. An uplock latch (flapper door) prevents gaps at the forward edge of the inboard and outboard doors. The central part of the MLG is the shock strut. The shock strut is an air-oil cylinder and piston assembly that absorbs shocks during taxiing, take-off, and landing. The shock strut pivots on a trunnion shaft which attaches the MLG to the airplane. The axles, brakes, wheels, and tires are mounted on a tubular, bogie-type axle beam that pivots on the base of the shock strut. The axle beam positioner, a small air-oil cylinder, holds the axle beam perpendicular to the shock strut when the gear is extended. The axle beam is kept parallel to the fuselage by a hinged torque arm assembly. A leveler rod attached to the upper torque arm moves the axle beam into a level position as the gear nears full retraction.

The gear is extended and retracted through the use of a folding upper drag brace assembly. The upper drag brace assembly attaches to the top of the shock strut, and a hydraulic actuator causes the assembly to fold for retraction and straighten for extension. The lower end of the actuator is held in a support structure, which includes a yoke assembly and a tube brace. A smaller downlock actuator locks the gear in the extended position by preventing the upper drag brace assembly from folding. Three lower drag braces attach to the trunnion shaft and help brace the gear to the airplane structure. Each main gear has four identical wheel and tire assemblies, each of which rotates on two sets of tapered roller bearings. Anti-skid detectors are mounted in both ends of the two axles. The disc brake assembly on each wheel is braced to the shock strut by a brake torque link.

The torque links prevent the axle beam from pitching forward when the brakes are applied. Each MLG wheel well has one upper and two lower doors. The shock strut is connected through balljoint and bellcrank assemblies to a torque tube running the length of the wheel well. When the gear is extended or retracted, movement of the shock strut is transmitted through the torque tube to pushrods that open and close the lower doors. A bellcrank on the torque tube hooks into the MLG uplock assembly to lock the gear in the fully retracted position. An additional door uplock latch assembly ensures that the lower doors remain fully closed in flight. When the gear is extended, a pushrod connected to the shock strut opens the oleo (upper) door to allow clearance between the shock strut and the top of the wheel well.

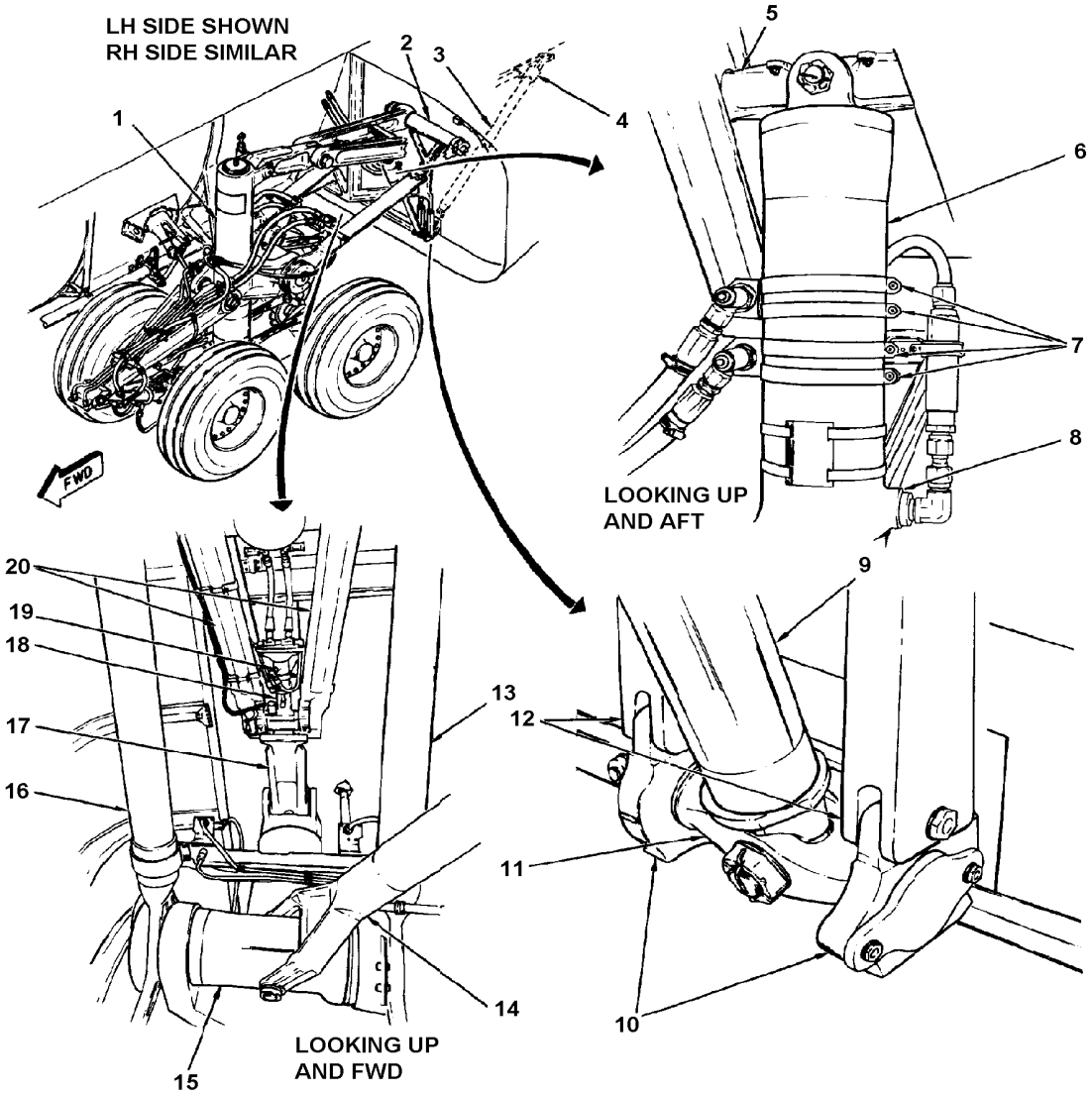

1. SHOCK STRUT
2. ATTACH LINK ASSEMBLE
3. TUBE BRACE
4. FITTING
5. TRUNNION-TYPE FITTING
6. MLG ACTUATOR CYLINDER
7. BRACKETS
8. BOTTOM INLET PORT
9. MLG ACTUATOR PISTON ROD
10. YOKE
11. TRUNNION
12. BRACE STRUTS
13. INBOARD LOWER DRAG BRACE
14. LOWER DRAG BRACE
15. TRUNNION SHAFT
16. OUTBOARD LOWER DRAC BRACE
17. FWD UPPER DRAG BRACI
18. DOWNLOCK LEVER
19. DOWNLOCK ACTUATOR
20. AFT UPPER DRAG BRACE

Main Landing Gear (MLG) Actuating and Support Components

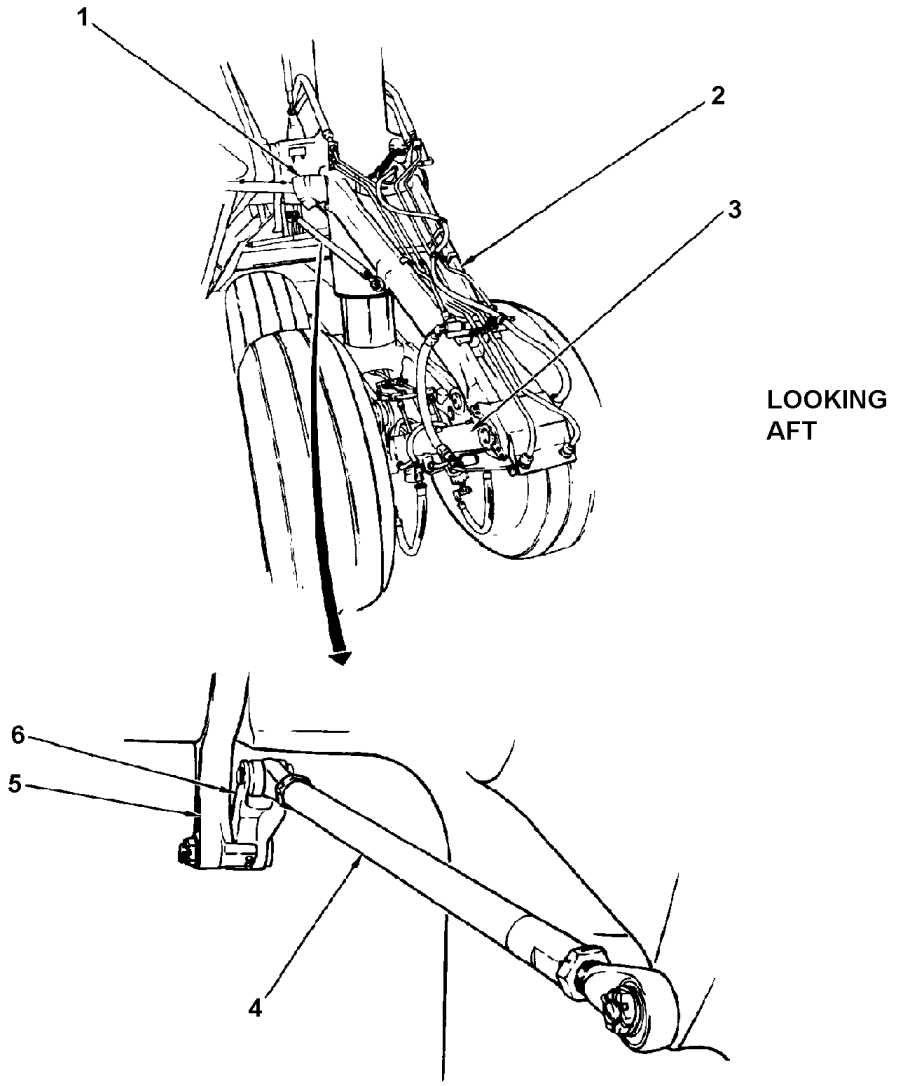

1. ROOT PIN
2. UPPER TORQUE ARM
3. LOWER TORQUE ARM
4. LEVELER ROD
5. LOWER DRAG BRACE
6. PIVOT ARM

Main Landing Gear (MLG) Torque Arms and Leveler Rod

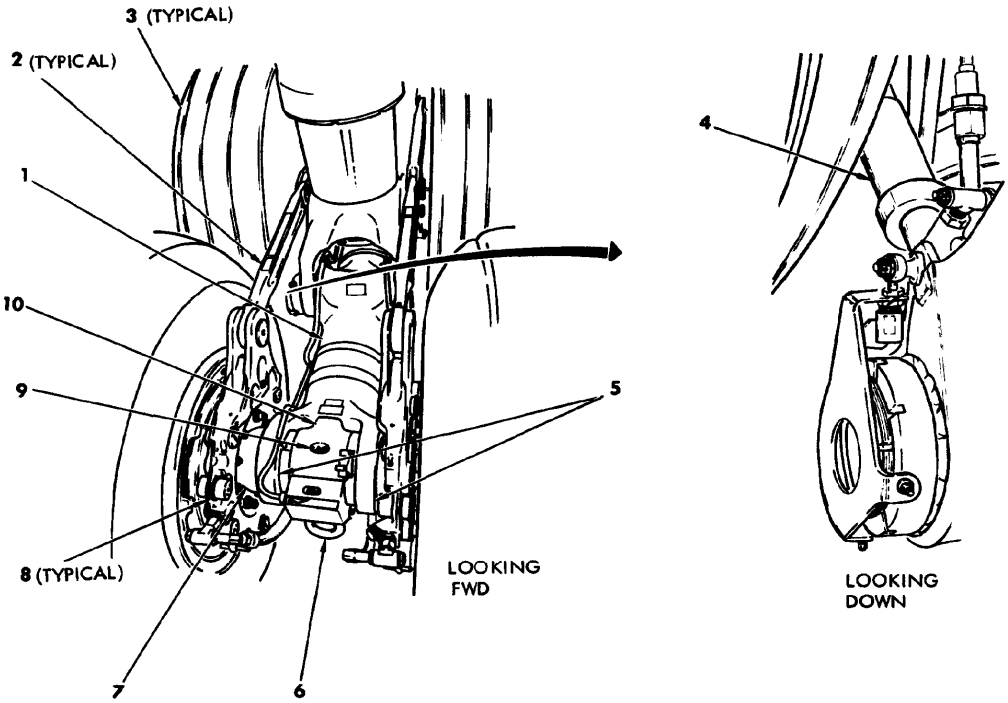

1. AXLE BEAM
2. BRAKE TORQUE LINK
3. WHEEL AND TIRE ASSEMBLY
4. AXLE BEAM POSITIONER
5. AXLE BEAM AFT LUGS
6. AFT TOWING RING
7. AXLE SLEEVE (AXLE WITHIN)
8. BRAKE ASSEMBLY
9. RUBBER BUMPER
10. SPACER ASSEMBLY

Main Landing Gear (MLG) Axle Beam and Related Components

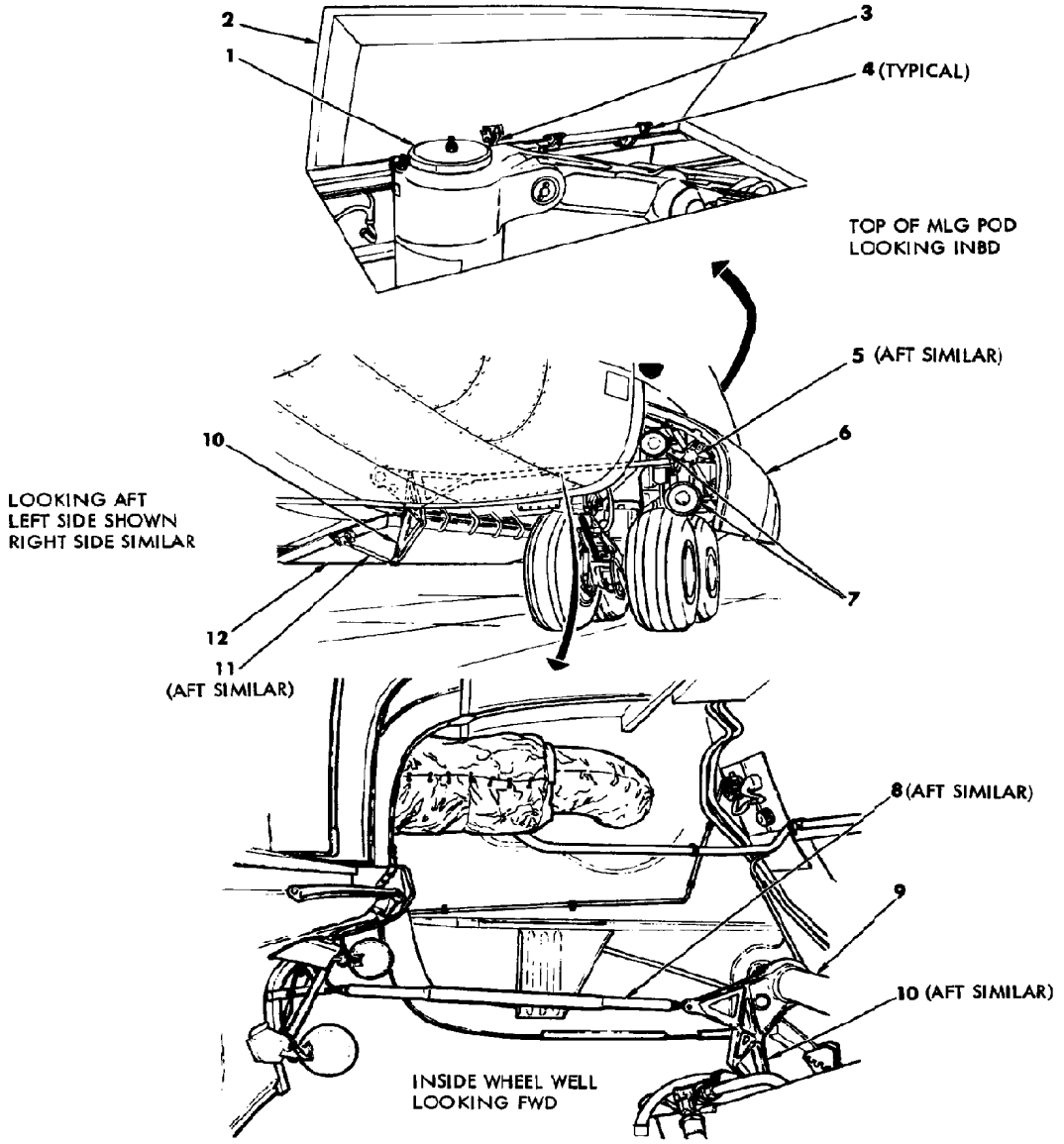

1. SHOCK STRUT
2. OLEO DOOR
3. OLEO DOOR PUSHROD
4. HINGE
5. BRACKET
6. OUTBOARD DOOR
7. TAXI LIGHTS
8. OUTBOARD DOOR DRIVE PUSHROD
9. TORQUE TUBE ASSEMBLY
10. FORWARD BELLCRANK
11. INBOARD DOOR DRIVE PUSHROD
12. INBOARD DOOR

Main Landing Gear (MLG) Doors and Drive Mechanism Components

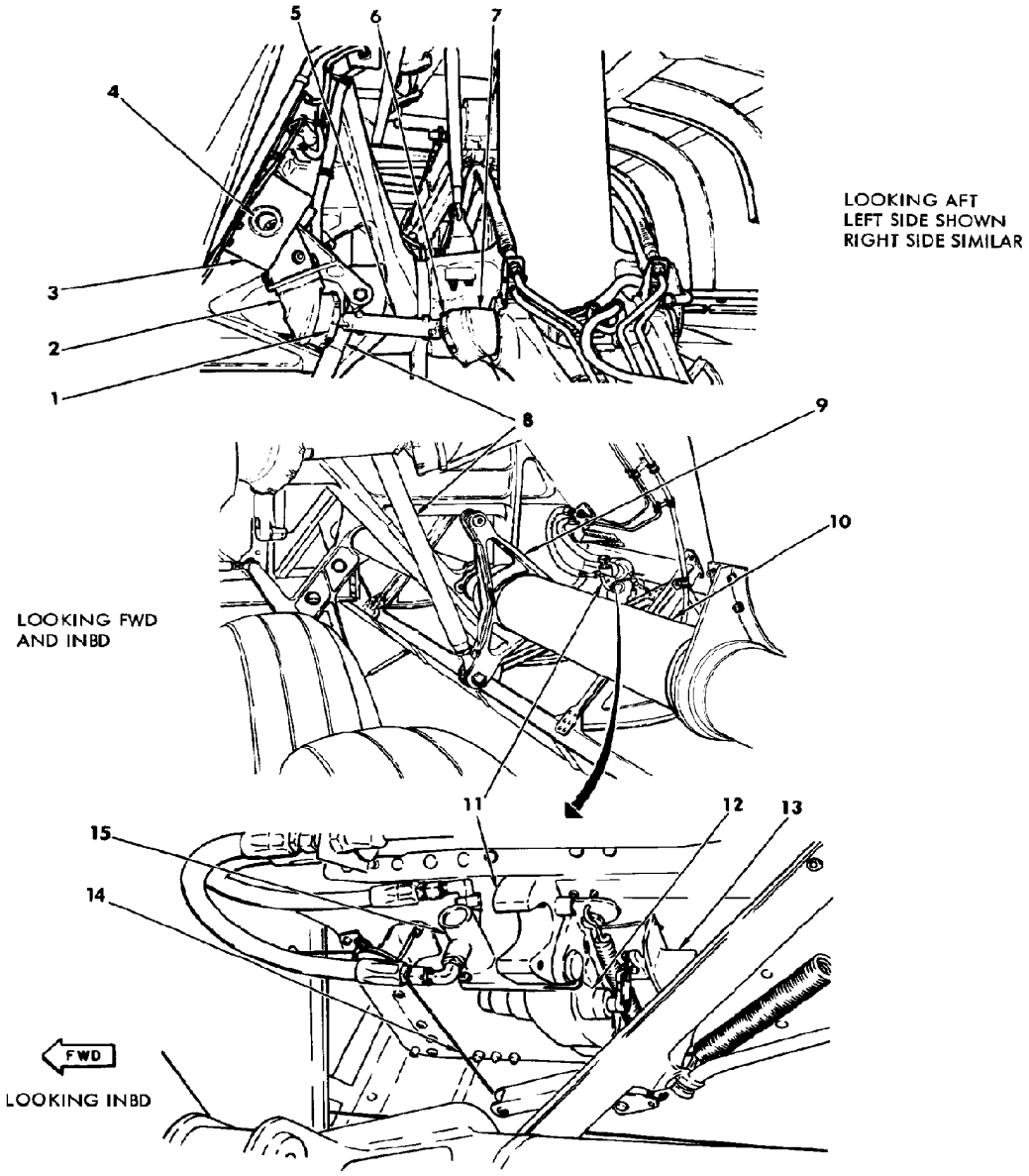

1. INBOARD BALLJOINT NUT
2. BELLCRANK ASSEMBLY
3. BRACKET
4. BUSHING
5. BELLCRANK DRIVE BALLJOINT ASSEMBLY
6. OUTBOARD BALLJOINT NUT
7. ROOT PIN
8. PUSHROD
9. UPLOCK BELLCRANK
10. TORQUE TUBE ASSEMBLY
11. UPLOCK HOOK
12. UPLOCK ASSEMBLY
13. UPLOCK SWITCH
14. CABLE ASSEMBLY
15. UPLOCK ACTUATOR

Main Landing Gear (MLG) Door Drive Mechanism and Uplock Components

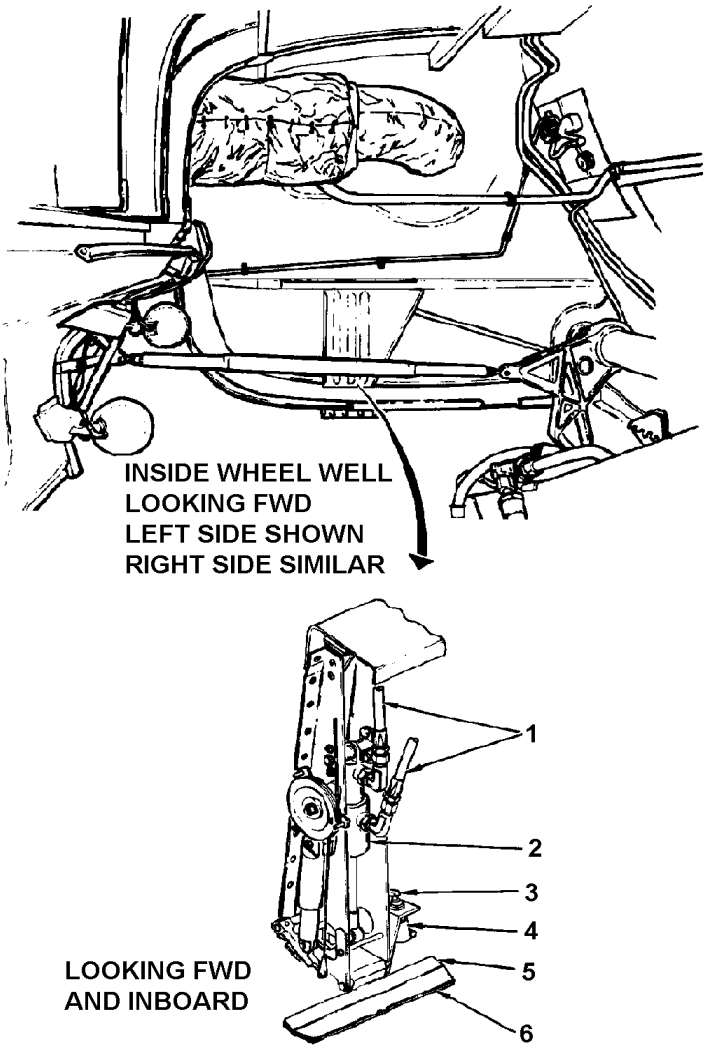

1. HYD LINES
2. UPLOCK LATCH ACTUATOR
3. STRIKER ARM
4. FLAPPER OVER-CENTER LOCK SWITCH
5. UPLOCK CATCH (FLAPPER DOOR)
6. BUMPER

Main Landing Gear (MLG) Door Uplock Latch Assembly

Nose Landing Gear (NLG) and Doors Subsystem

The C-141 has a single, steerable, twin-wheel NLG installed in the bottom center of the fuselage below the flight station. The NLG is fully retractable using hydraulic power from the No. 2 hydraulic system. A hydraulically actuated mechanical lock secures the NLG in the fully extended and fully retracted positions. The nose gear wheel well is enclosed by three doors. The two forward doors open down and outboard as the gear is lowered and close again as the gear reaches full extension.

The aft door opens by moving down and aft parallel to the fuselage. An additional aerodynamic baffle door is mounted on the aft door drive components and helps prevent high-speed air from entering the wheel well. All the doors are linked to the NLG by pushrods connected to bellcranks on the shock strut trunnion. This arrangement causes the doors to move to the correct position automatically as the gear is extended and retracted. The NLG uses an air-oil shock strut to cushion the jolts of taxiing, take-off, and landing. The horizontal shock strut trunnion connects the nose gear to the airplane structure and is mounted in bearings on each end. The bearings allow the shock strut trunnion to be rotated by a push-pull hydraulic actuator to extend and retract the gear.

A folding drag brace assembly connects the top of the shock strut to another horizontally mounted trunnion. The drag brace and trunnion transmit drag force from the shock strut to the airplane structure. The drag brace is also used to lock the gear in either the fully extended or fully retracted position. A built-in up/down lock mechanism is locked and unlocked by a small up/down lock actuator mounted near the top of the shock strut. The nose gear can be steered with the steering wheel or the rudder pedals. A large steering actuator is mounted just forward of the shock strut trunnion. A hinged torque arm assembly connects the upper and lower parts of the shock strut and is also used to steer the nose wheels. When the gear is retracted, spin brakes rub against the tires to stop the wheels from spinning.

The NLG wheel well is enclosed by three doors. The two forward doors open down and outward as the gear is lowered, then close again when it is fully extended. The aft door opens by moving down and aft along the fuselage. An aerodynamic baffle door keeps the aft door from catching the wind. All four nose wheel well doors are connected to bellcranks on the shock strut trunnion. When the trunnion rotates during gear extension or retraction, the doors automatically move to the proper position.

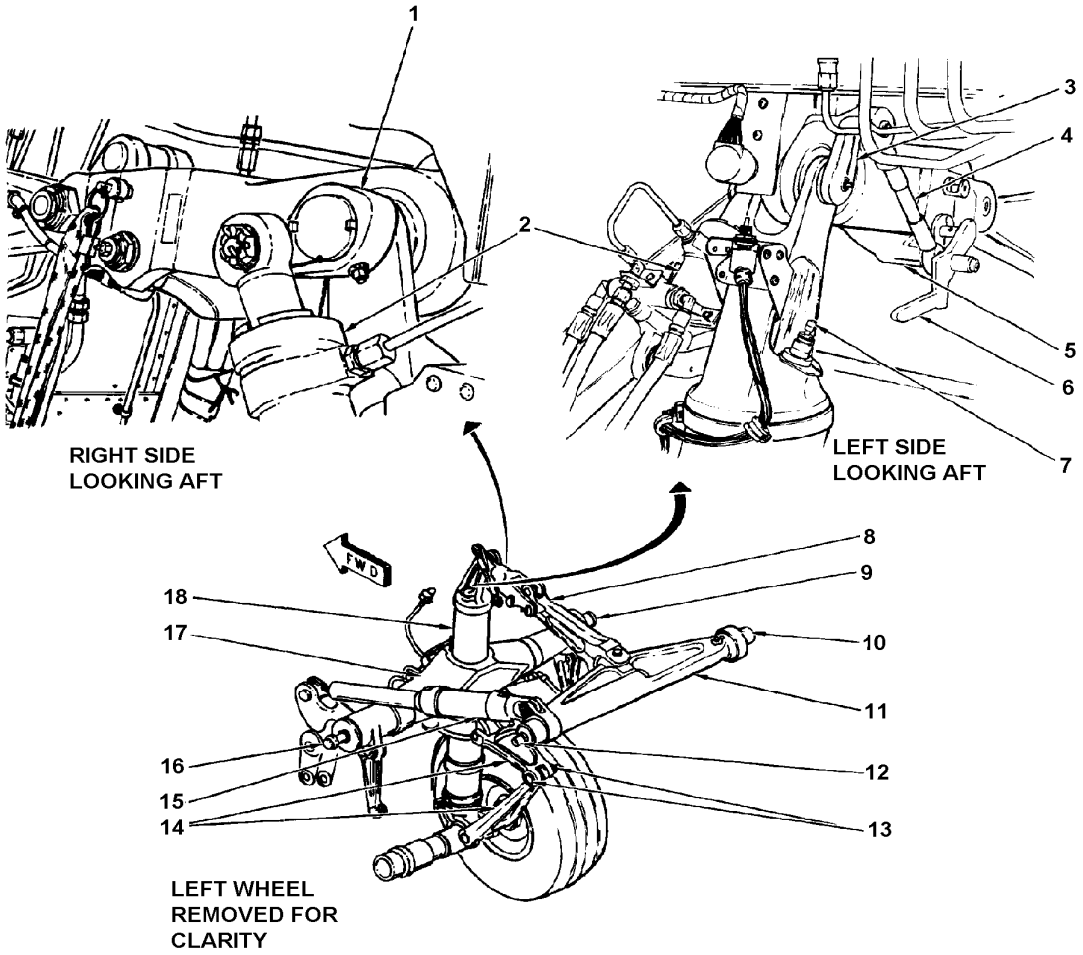

1. RIGHT NLG CRANK
2. UP/DOWN LOCK ACTUATOR
3. LEFT NLG CRANK
4. UP/DOWN LOCK PUSHROD
5. UP/DOWN LOCK LEVER
6. UP/DOWN LOCK EMERGENCY RELEASE HANDLE
7. FILLER VALVE
8. DRAG BRACE ASSEMBLY
9. SPHERICAL BEARING
10. BEARING
11. NLG TRUNNION
12. BEARING
13. DISCONNECT PINS
14. TORQUE ARM ASSEMBLIES
15. NLG ACTUATOR
16. SPHERICAL BEARING
17. SHOCK STRUT TRUNNION
18. SHOCK STRUT

Nose Landing Gear (NLG) Support and Actuating Components

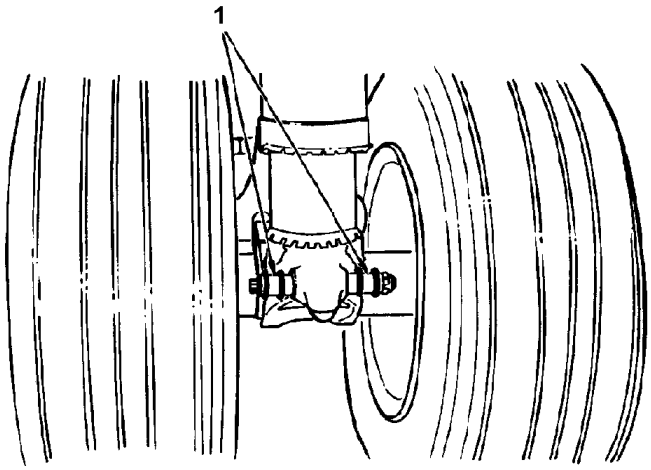

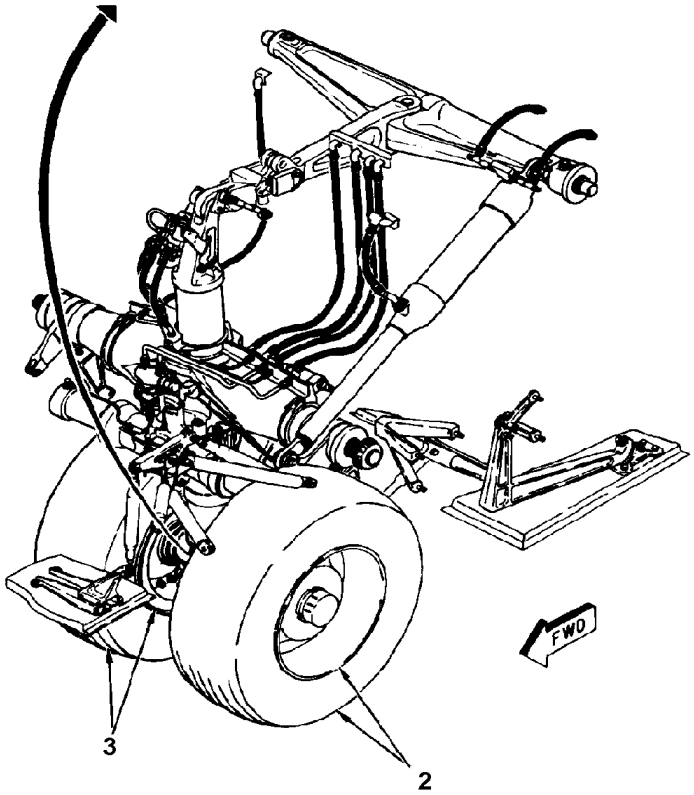

1. TOWING SPOOLS
2. LEFT WHEEL AND TIRE ASSEMBLY
3. RIGHT WHEEL AND TIRE ASSEMBLY

Nose Landing Gear (NLG) Wheel and Tire Assemblies and Towing Spools

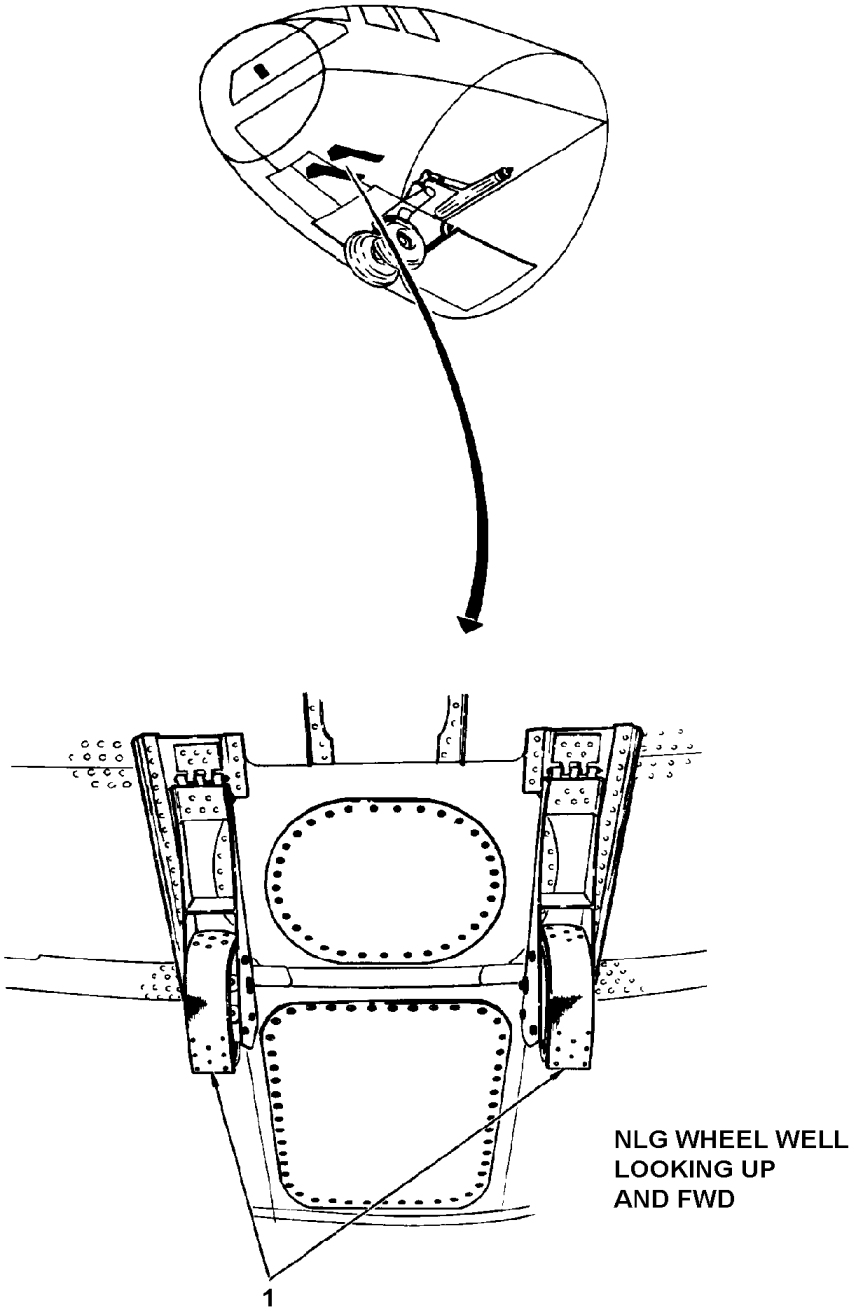

1. SPIN BRAKES

Nose Landing Gear (NLG) Spin Brakes

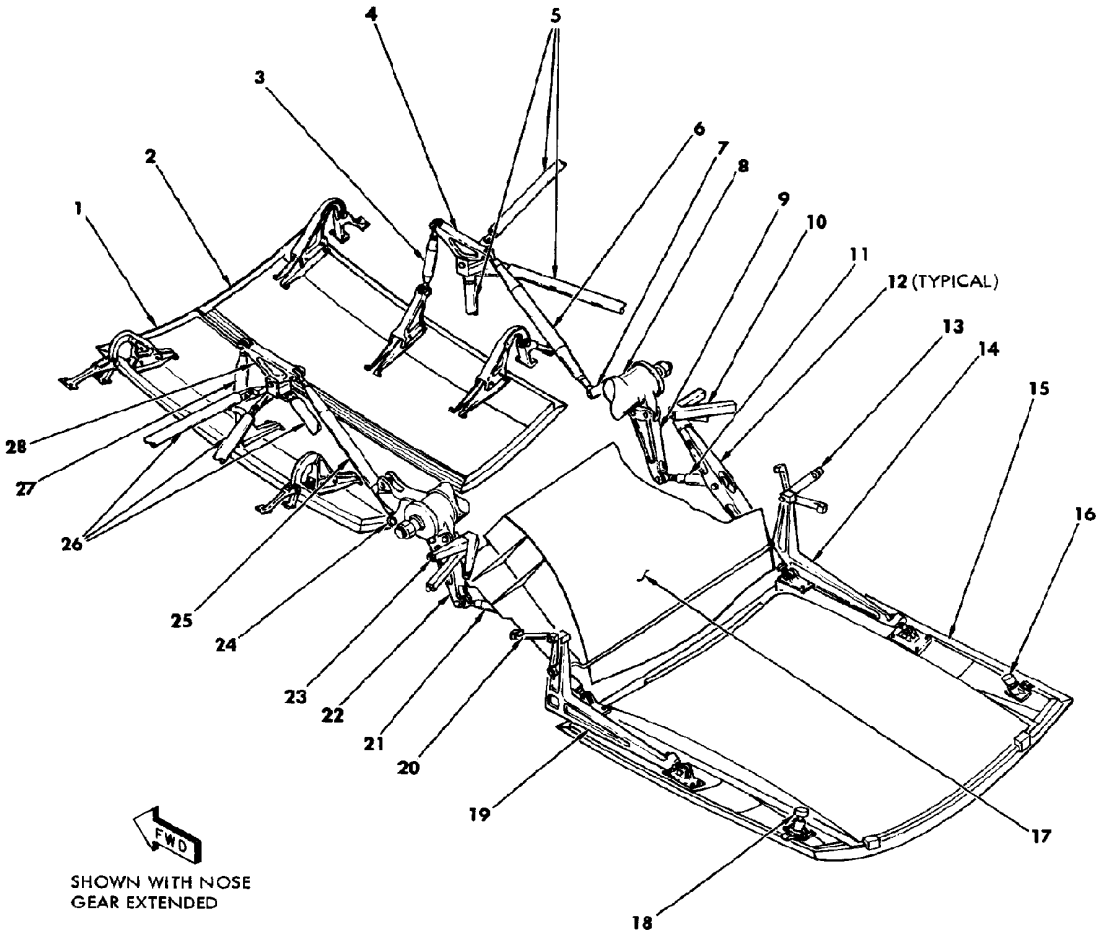

1. LEFT FORWARD DOOR
2. RIGHT FORWARD DOOR
3. FORWARD PUSHROD
4. BELLCRANK
5. SUPPORT TUBES
6. PUSHROD
7. TRUNNION BELLCRANK
8. SHOCK STRUT TRUNNION
9. TRUNNION BELLCRANK
10. ATTACH FITTING
11. AFT PUSHROD
12. FORWARD ARM
13. ATTACH FITTING
14. AFT ARM
15. AFT DOOR
16. BUMPER
17. BAFFLE DOOR
18. BUMPER
19. AFT ARM
20. ATTACH FITTING
21. AFT PUSHROD
22. TRUNNION BELLCRANK
23. ATTACH FITTING
24. TRUNNION BELLCRANK
25. PUSHROD
26. SUPPORT TUBES
27. FORWARD PUSHROD
28. BELLCRANK

Nose Landing Gear (NLG) Doors and Drive Mechanism

Extension and Retraction Subsystem

The landing gear extension and retraction are electrically controlled by the landing gear control handle located on the right side of the center instrument panel. The MLG and NLG are extended or retracted simultaneously. Normal extension and retraction is controlled electrically and powered by the No. 2 hydraulic system. Movement of the landing gear control handle causes selector valves to direct hydraulic fluid under pressure to the appropriate actuators to extend or retract the gear. The correct sequence of events during normal extension and retraction is maintained through the use of four switches in each main gear and three switches in the nose gear that sense the position of the gear and doors. If hydraulic pressure is lost or electrical controls fail, emergency extension systems can be used to lower and downlock the gear manually. There is no system for manually retracting, since failure of the normal retraction system does not create a critical situation.

Normal Extension and Retraction

The NLG selector valve, MLG selector valve, MLG downlock selector valve, and MLG doors uplock selector valve direct hydraulic pressure for landing gear operation. All four valves are solenoid actuated with manual overrides provided in case of electrical failure. The MLG selector valve, located on the left side of the cargo compartment, controls the flow of hydraulic pressure to the MLG actuators. Flow regulators are used to control the speed of extension and retraction. The MLG downlock selector valve is also located on the left side of the cargo compartment. It directs pressure to the main gear downlock actuators. The downlock actuator locks the drag link assembly overcenter when the gear is fully extended. Pressure is sent to the opposite side of the downlock actuator to release the drag link assembly and allow it to fold when the gear is being retracted. The MLG door uplock selector valve, also on the left side of the cargo compartment, controls the flow of hydraulic pressure to the door uplock latch actuators. The NLG selector valve is located in the electronics compartment below the flight station. It directs hydraulic pressure to the NLG actuator, up/down lock actuator, steering actuator, and the normal brake selector valve. A flow regulator and a pressure reducer control the speed and force of extension. Other flow regulators are used to control retraction speed.

Emergency Extension

The MLG emergency extension system is used to release and downlock the main gear when a hydraulic failure will not allow for normal extension. Each main gear has its own emergency extension system. A handle is pulled to release the doors uplock, and another handle is pulled to release the main gear uplock. When the gear has fallen into position, a handle and bellcrank mechanism is used to lock the drag link assembly overcenter. A manually operated hydraulic system (system No. 4) provides emergency extension for the NLG. The system is located below the flight station and consists of a reservoir, an emergency selector valve, a handpump, a relief valve, and associated plumbing. If the No. 2 hydraulic system should fail, the handpump can be used to lower the gear by supplying pressure to the up/down lock actuator and the nose gear actuator.

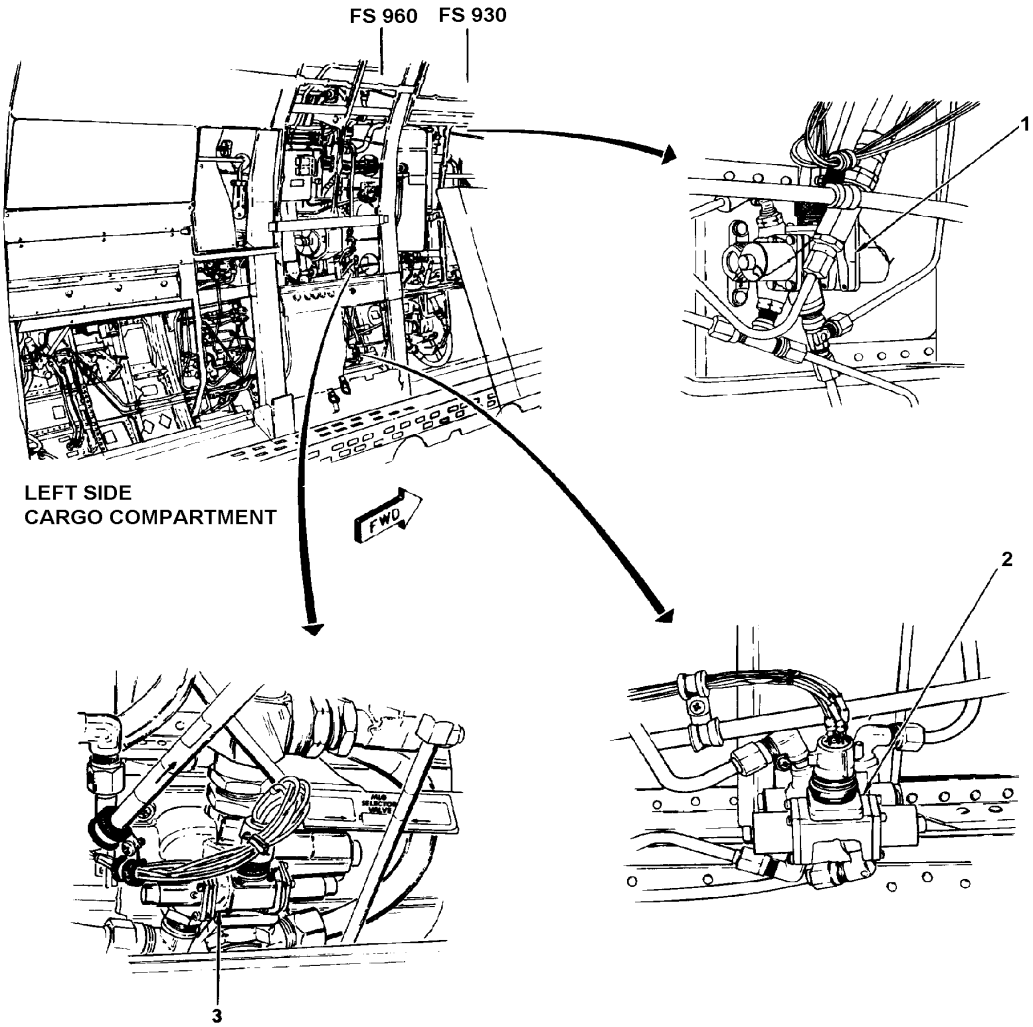

1. MLG DOOR UPLOCK SELECTOR VALVE
2. MLG DOWNLOCK SELECTOR VALVE
3. MLG SELECTOR VALVE

Main Landing Gear (MLG) Hydraulic Selector Valves

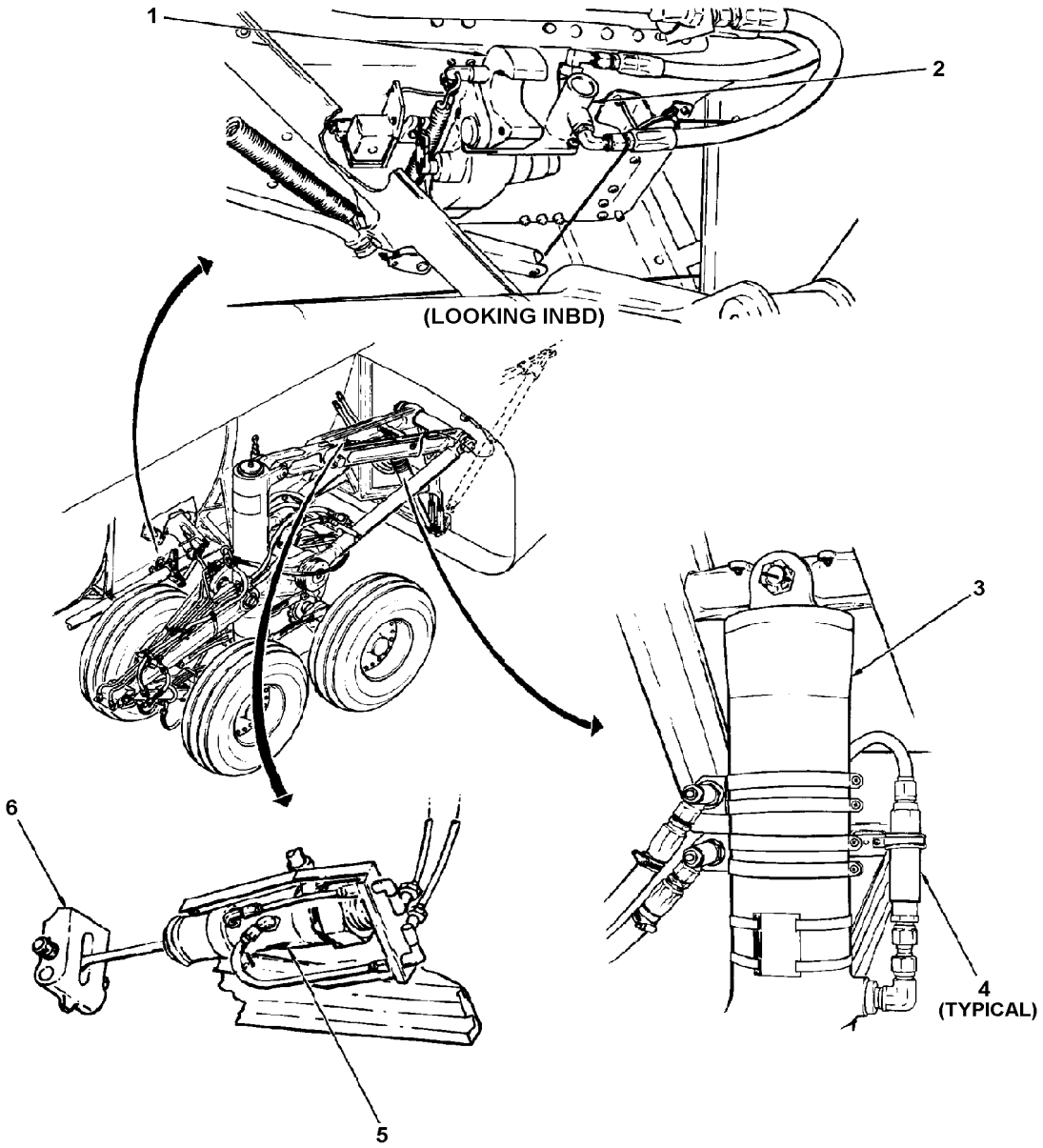

1. UPLOCK HOOK
2. UPLOCK ACTUATOR
3. MLG ACTUATOR
4. FLOW REGULATOR
5. DOWNLOCK ACTUATOR
6. DOWNLOCK LEVER

Main Landing Gear Extension/Retraction and Locking Actuators

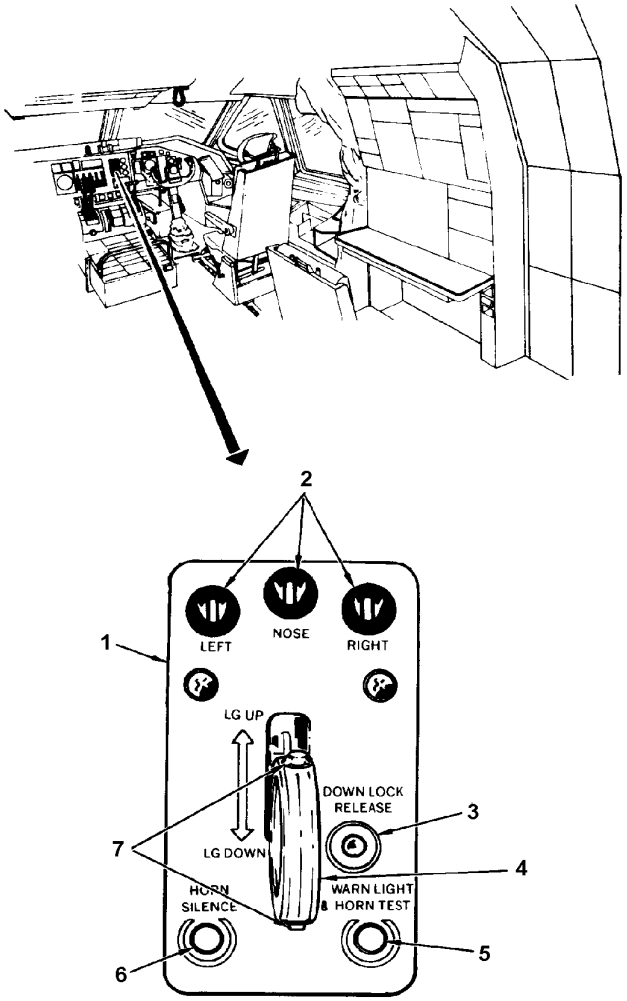

1. LANDING GEAR CONTROL PANEL
2. POSITION INDICATORS
3. CONTROL HANDLE DOWN LOCK RELEASE BUTTON
4. LANDING GEAR CONTROL HANDLE
5. WARNING LIGHT AND HORN TEST BUTTON
6. HORN SILENCE BUTTON
7. WARNING LIGHTS

Landing Gear Control Panel

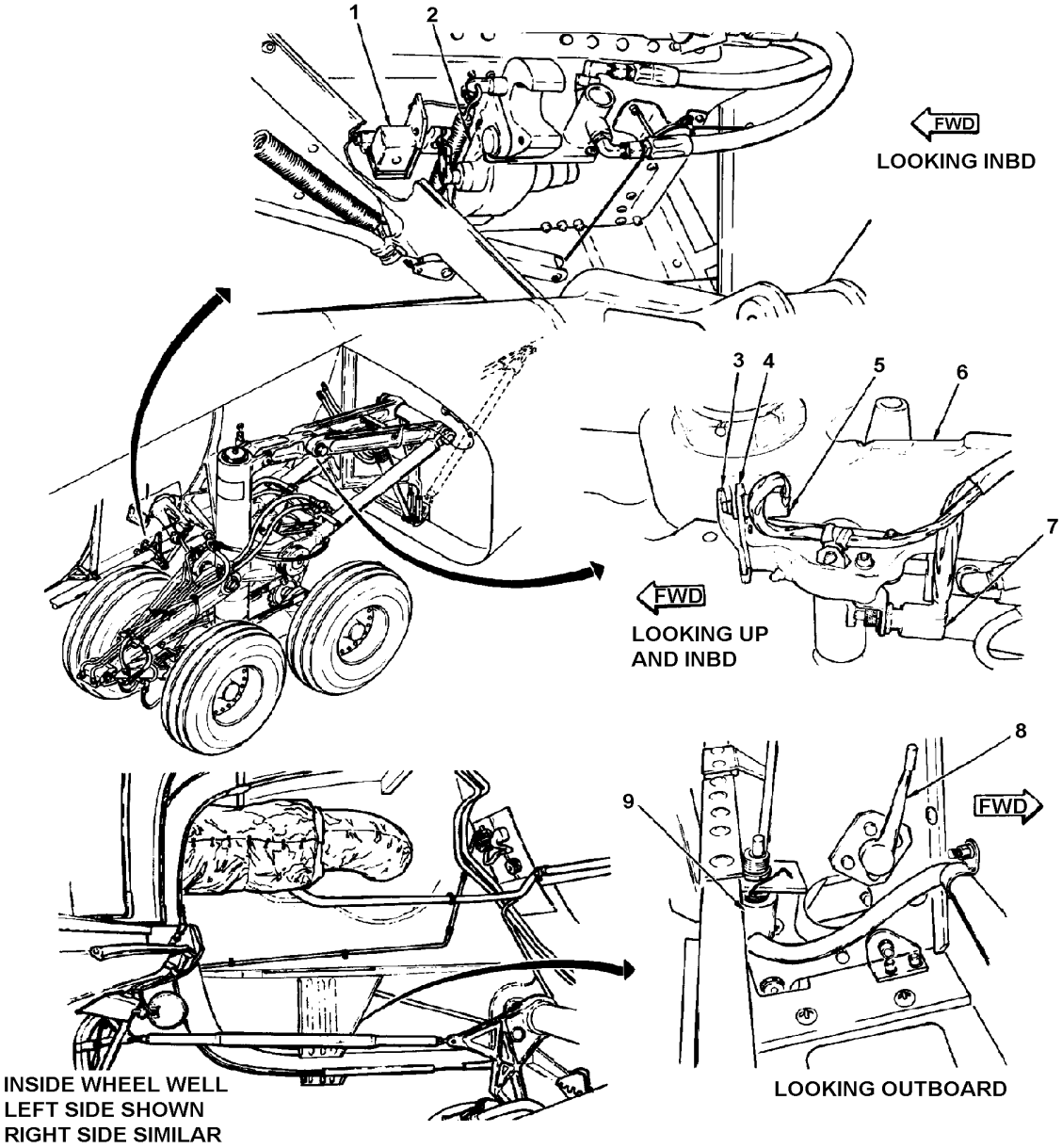

1. UPLOCK SWITCH
2. UPLOCK ASSEMBLY
3. ADJUSTABLE STOP
4. BRACKET
5. PRESSURE SEQUENCE SWITCH
6. AFT UPPER DRAG BRACE ASSEMBLY
7. DOWNLOCK SWITCH (REF)
8. STRIKER ARM
9. FLAPPER OVER-CENTER LOCK SWITCH

Main Landing Gear (MLG) Switches

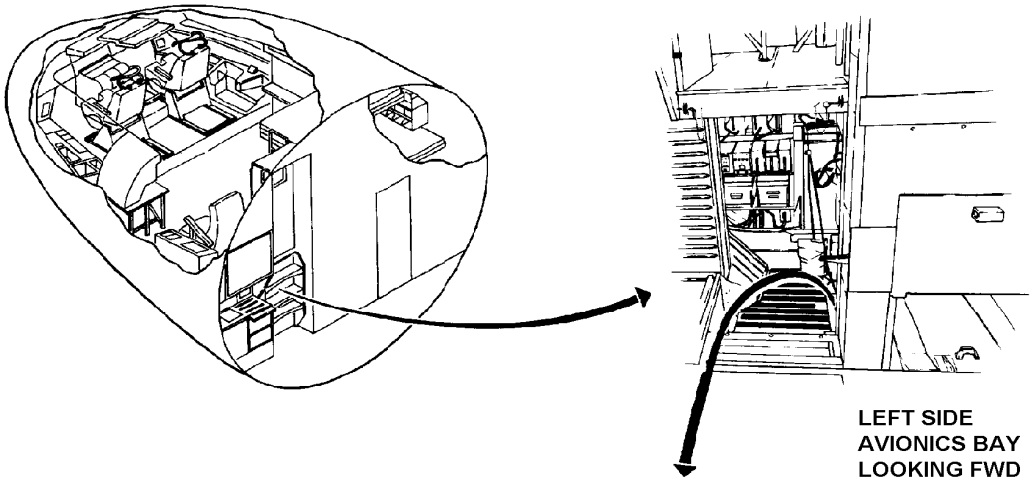

LEFT SIDE
AVIONICS BAY
LOOKING FWD
(LADDER REMOVED)

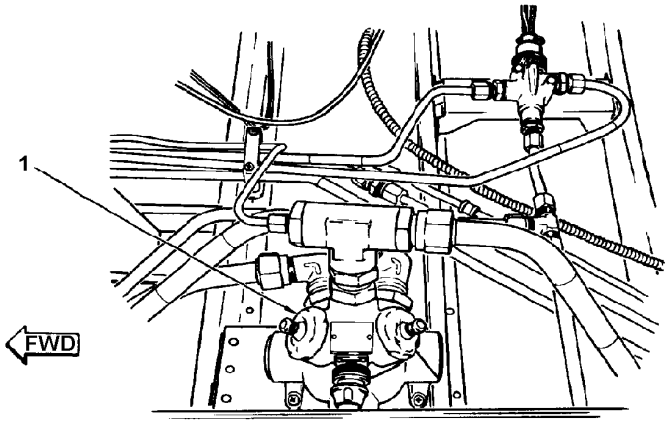

LOOKING DOWN
BELOW AUTOPILOT
JUNCTION BOX

1. NLG SELECTOR VALVE

Nose Landing Gear (NLG) Selector Valve

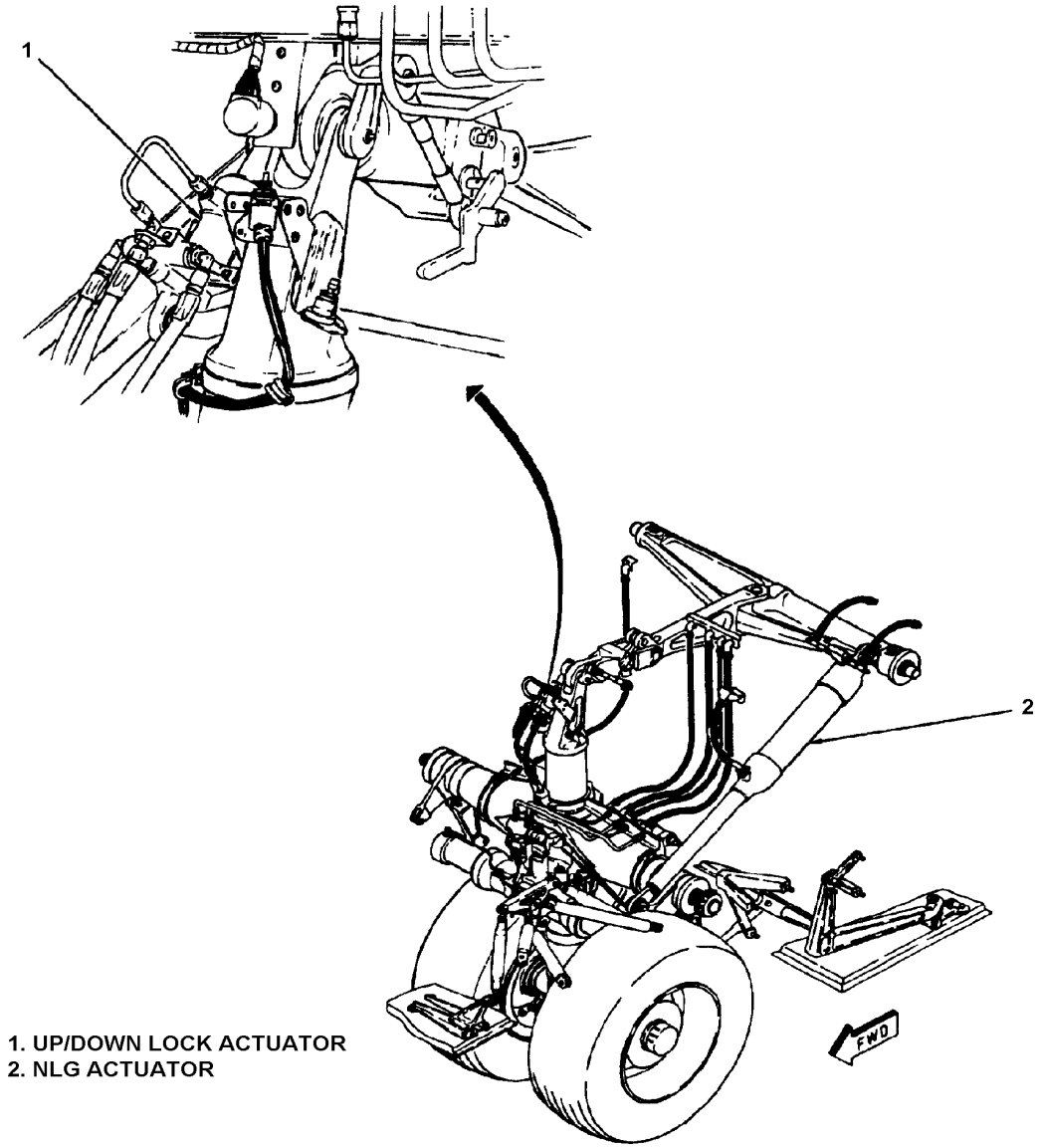

1. UP/DOWN LOCK ACTUATOR
2. NLG ACTUATOR

Nose Landing Gear (NLG) Extension/Retraction and Locking Actuators

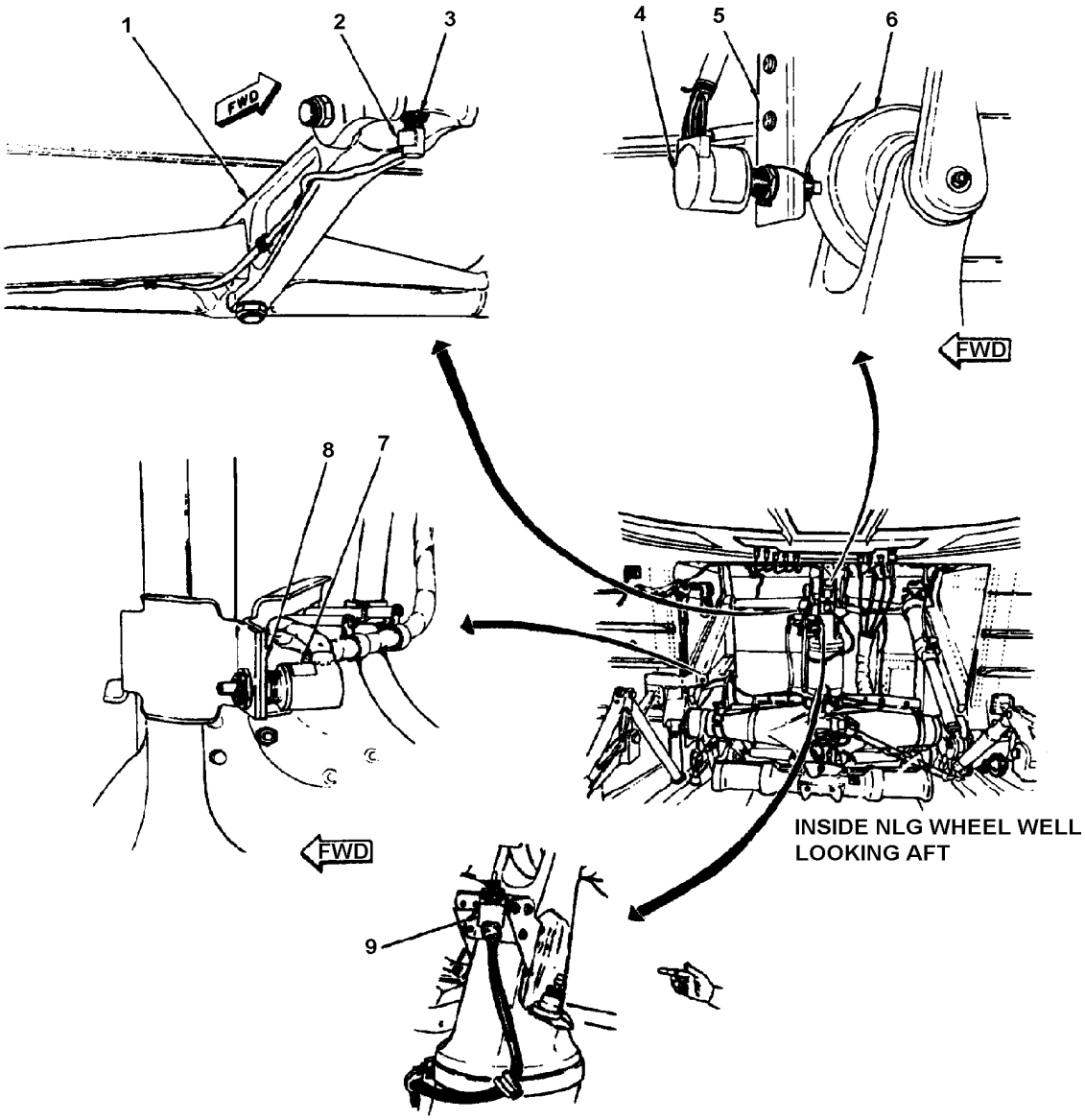

1. DRAG BRACE (AFT SECTION)
2. LOCK SWITCH
3. BRACKET
4. POSITION NO. 4 (POSITIVE DOWN) SWITCH
5. BRACKET
6. DRAG BRACE (FWD SECTION)
7. POSITION NO. 1 (UP) SWITCH
8. BRACKET
9. POSITION NO. 2 (AVIONIC) SWITCH

Nose Landing Gear (NLG) Switches

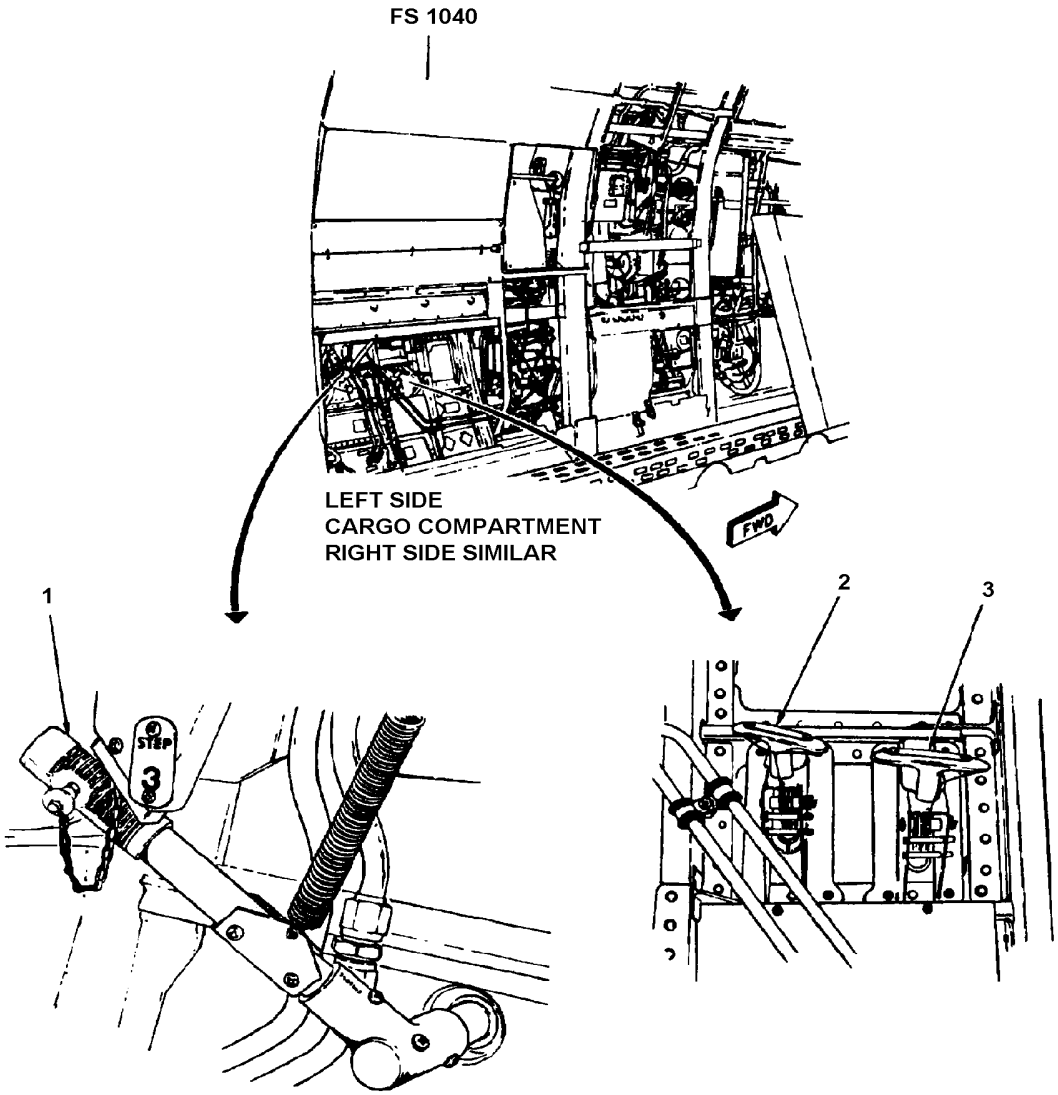

1. STEP 3 (EMER DOWNLOCK) HANDLE
2. STEP 2 HANDLE (UPLOCK EMER RELEASE)
3. STEP 1 HANDLE (DOOR UPLOCK LATCH EMER RELEASE)

Main Landing Gear (MLG) Emergency Extension Components (Sheet 1 of 2)

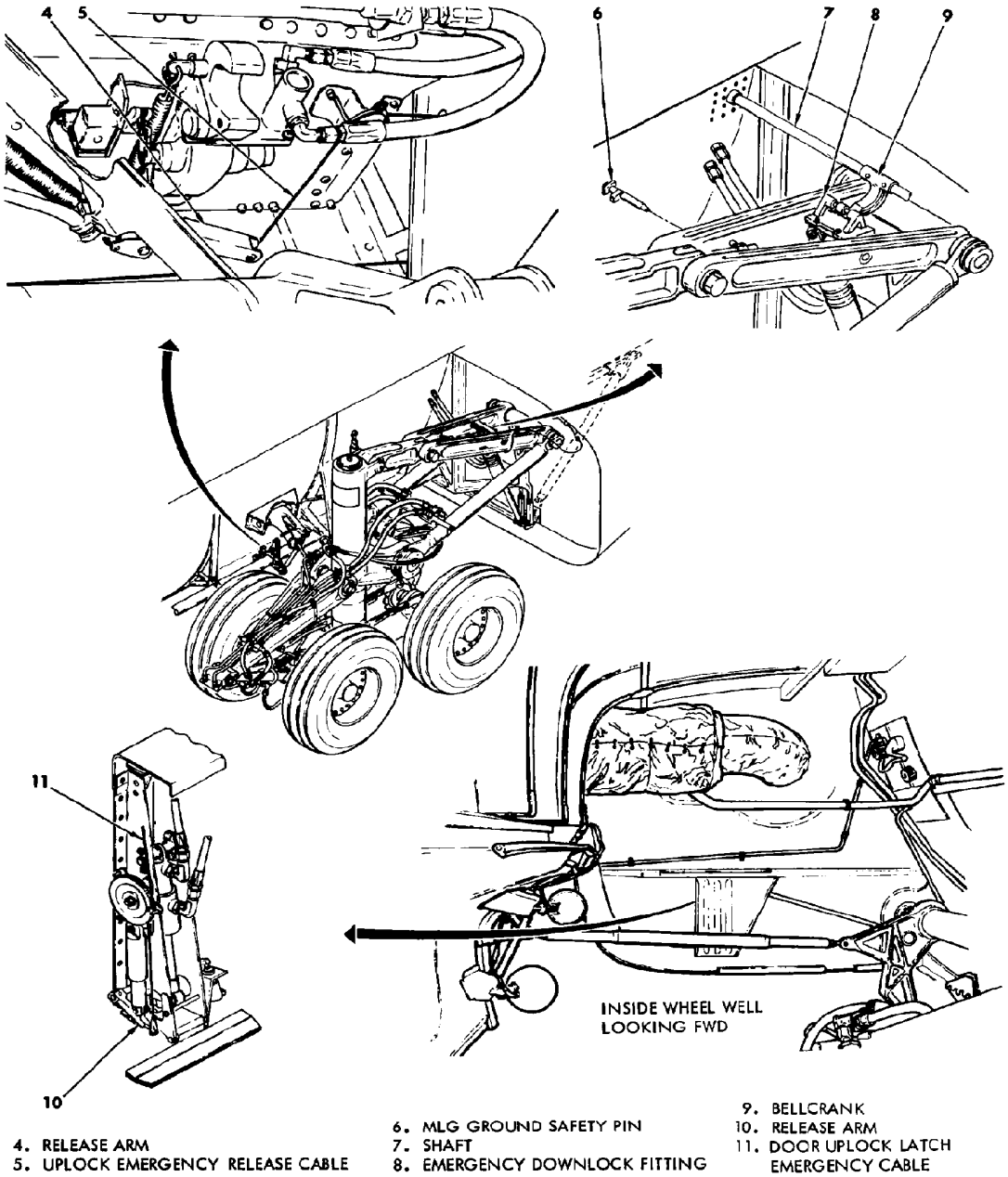

Main Landing Gear (MLG) Emergency Extension Components (Sheet 2 of 2)

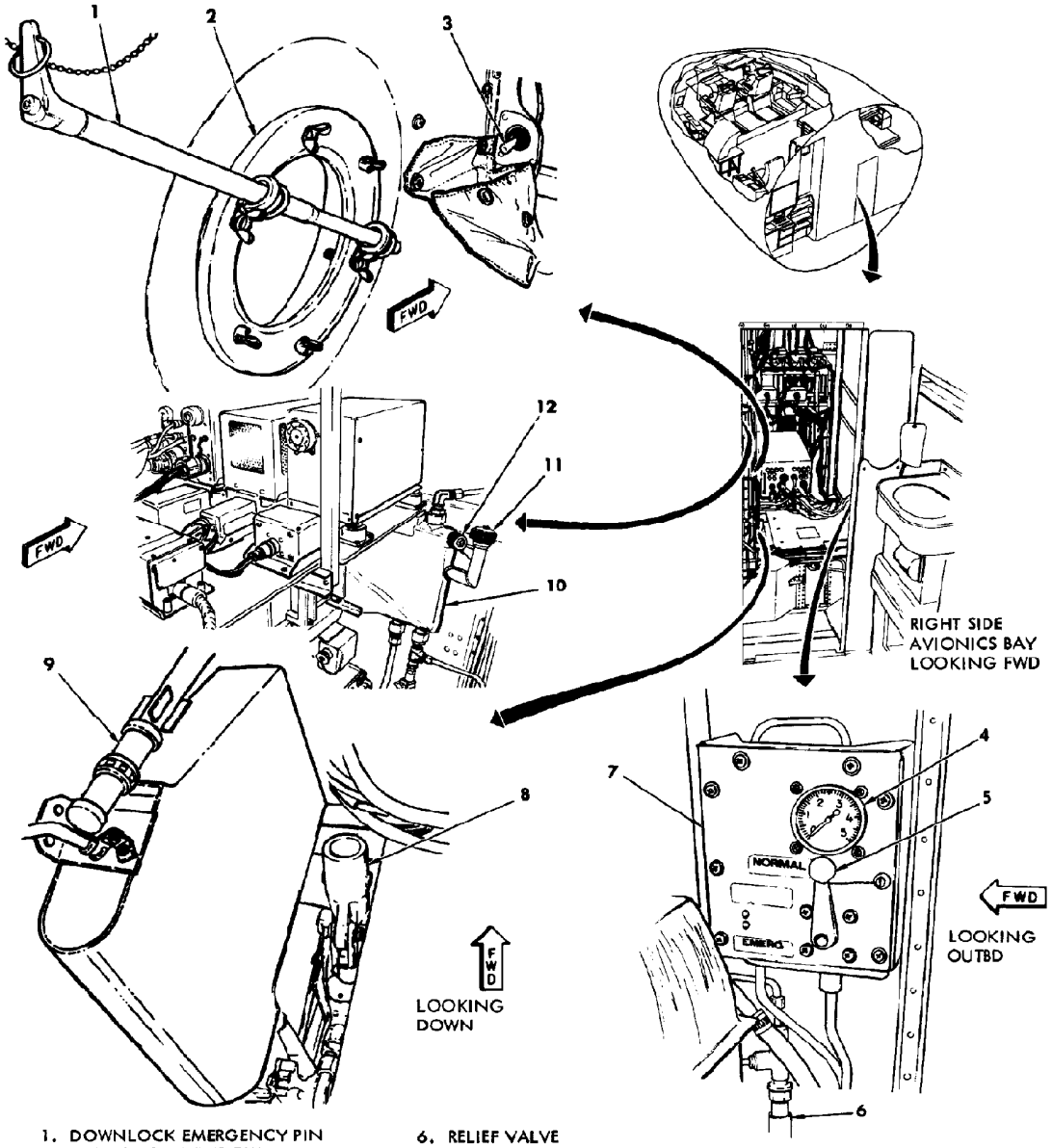

1. DOWNLOCK EMERGENCY PIN
2. INSPECTION WINDOW
3. WHEEL WELL LIGHT SWITCH
4. PRESSURE GAGE
5. EMERG NLG SELECTOR VALVE HANDLE
6. RELIEF VALVE
7. NO. 4 HYDRAULIC SYSTEM CONTROL PANEL
8. HAND PUMP
9. HAND PUMP HANDLE
10. NO. 4 HYDRAULIC SYSTEM RESERVOIR
11. VENT
12. QUANTITY INDICATOR

Nose Landing Gear (NLG) Emergency Extension Components (Sheet 1 of 2)

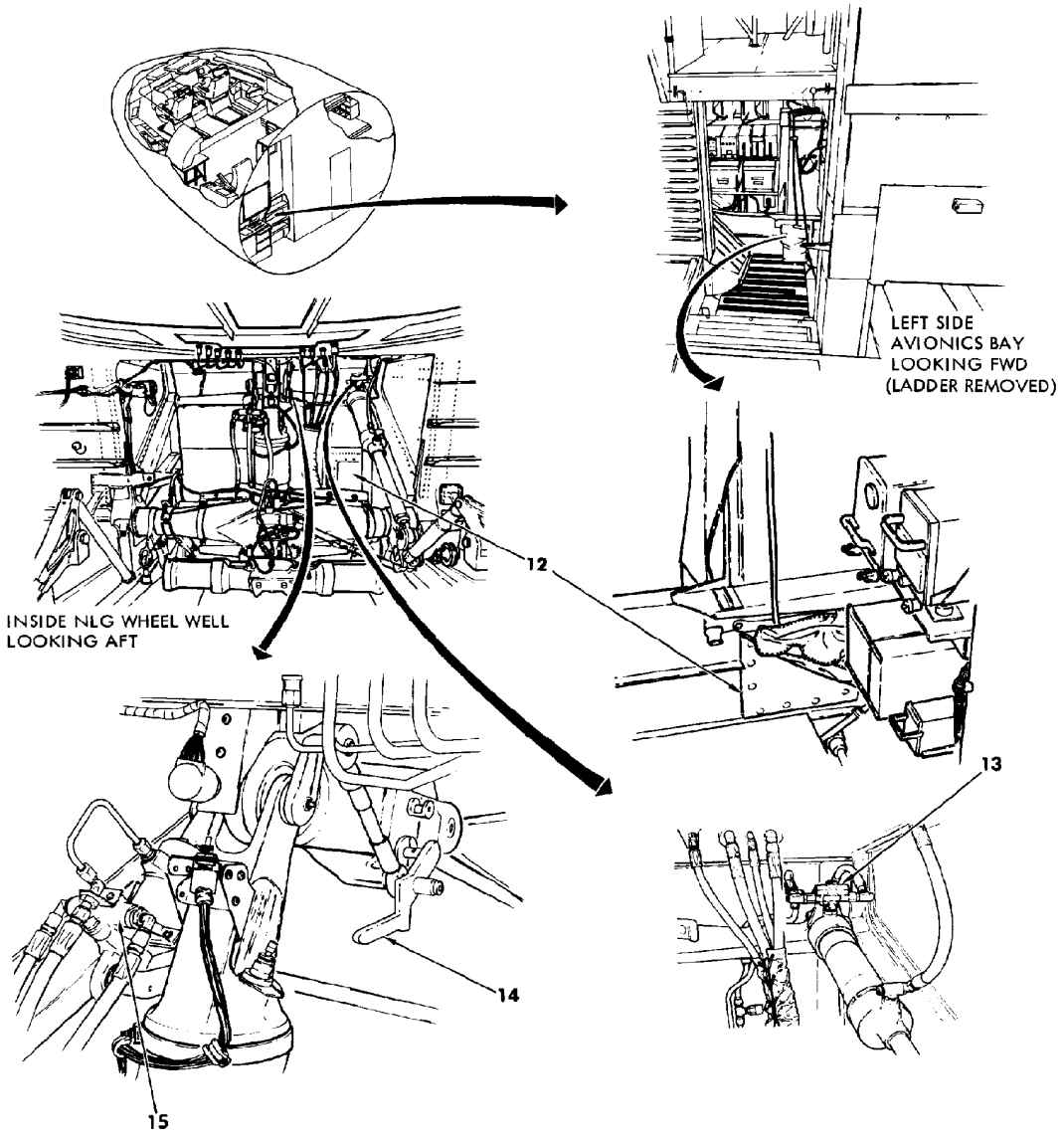

12. ACCESS PANEL
13. NLG ACTUATOR SHUTTLE VALVE
14. UP/DOWN LOCK EMERGENCY RELEASE LEVER
15. UP/DOWN LOCK ACTUATOR SHUTTLE VALVE

Nose Landing Gear (NLG) Emergency Extension Components (Sheet 2 of 2)

Main Landing Gear (MLG) Brakes and Anti-skid Subsystem

The MLG brakes are hydraulically operated, using No. 2 system pressure for normal operation and No. 3 system pressure for emergency braking. An anti-skid system can be used with the normal brake system to prevent locked wheels and skidding. The brake and anti-skid panel, located on the right side of the center instrument panel, has an anti-skid switch and a brake selector switch with pressure gages for normal and emergency brake systems. Parking brakes are set with a T-handle on the left side of the pilot's instrument panel.

Brakes

The MLG brake system has two dual pilot metering valves, one for each gear. The dual pilot metering valves transform movement of the brake pedal linkage into metered hydraulic pilot pressure. That pressure is supplied from the No. 2 hydraulic system through the normal brake selector valve. When the brake selector switch is placed to the EMER position, the normal brake selector valve shuts off No. 2 pressure, and the emergency brake selector valve sends No. 3 hydraulic system pressure to the other half of the pilot metering valves. During normal braking, the pilot pressure from each metering valve is routed to a pair of anti-skid control valves. These valves respond to pilot pressure by metering No. 2 hydraulic system pressure to the brake assemblies. For emergency braking, the anti-skid control valves are bypassed. No. 3 system pilot pressure is directed to a main brake metering valve that sends No. 3 system pressure to the brake assemblies. Normal and emergency brake pressure lines for each wheel meet at a shuttle valve. Whichever line is supplying pressure actuates the shuttle valve, positioning it to shut off the other line. Pressure from each shuttle valve passes through a hydraulic fuse that shuts off in response to excessive fluid flow. If a leak occurs downstream from one of the fuses, the fuse will close and prevent the system from being totally drained. Each MLG wheel has its own disc brake assembly. The discs are closely spaced in a sandwich arrangement. Seven of the discs, known as rotors, rotate with the wheel and eight discs, called stators, are fixed. Hydraulically actuated pistons squeeze the discs together, slowing the wheel. When pressure is released, springs pull the discs apart, allowing the wheel to turn freely.

Anti-Skid

The MLG normal brakes are equipped with an anti-skid system to prevent the dangerous loss of braking and control that occurs during a skid. The system works by sensing a skid in its earliest stages. Each main gear wheel rotates the shaft of an anti-skid detector. The anti-skid detector generates an electrical signal based on that rotation and sends that signal to the anti-skid control box located in the cargo compartment. A skid begins with a rapid decrease in wheel rotation speed. The anti-skid control box senses the rapid deceleration in the signal from the anti-skid detector and energizes the step 1 solenoid in the corresponding anti-skid control valve. The step 1 solenoid overrides the pilot pressure that was regulating pressure to the brakes. Brake pressure is reduced, and the wheel that was beginning to skid speeds up again. If a wheel suddenly locks up, a separate circuit in the anti-skid control box will energize both the step 1 and step 2 solenoids in the anti-skid control valve. Energizing the step 2 solenoid causes rapid brake release by dumping the pressure in the brake lines back to system return. When the anti-skid detector signals the control box that the locked wheel is rotating again, the step 2 solenoid is de-energized. As the

wheel picks up speed, the step 1 solenoid is also de-energized and normal braking is restored. The anti-skid system operates until the airplane has slowed below 15 knots. A fail-safe feature prevents an anti-skid malfunction from causing a prolonged loss of braking action. If two or more brakes are released for approximately four seconds, sensing circuits in the control box will turn off the system, braking will revert to manual control, and the ANTISKID OFF light on the instrument panel will come on. Brake release on a single wheel for more than 2.5 seconds will cause the DET OUT light on the brake and anti-skid panel to come on, but skid control will continue for the other wheels. The anti-skid system also works to ensure that all brakes are fully released until after the airplane touches down. When the landing gear is extended during approach, the BRAKES REL light on the brake and anti-skid panel comes on to indicate that the brakes are released.

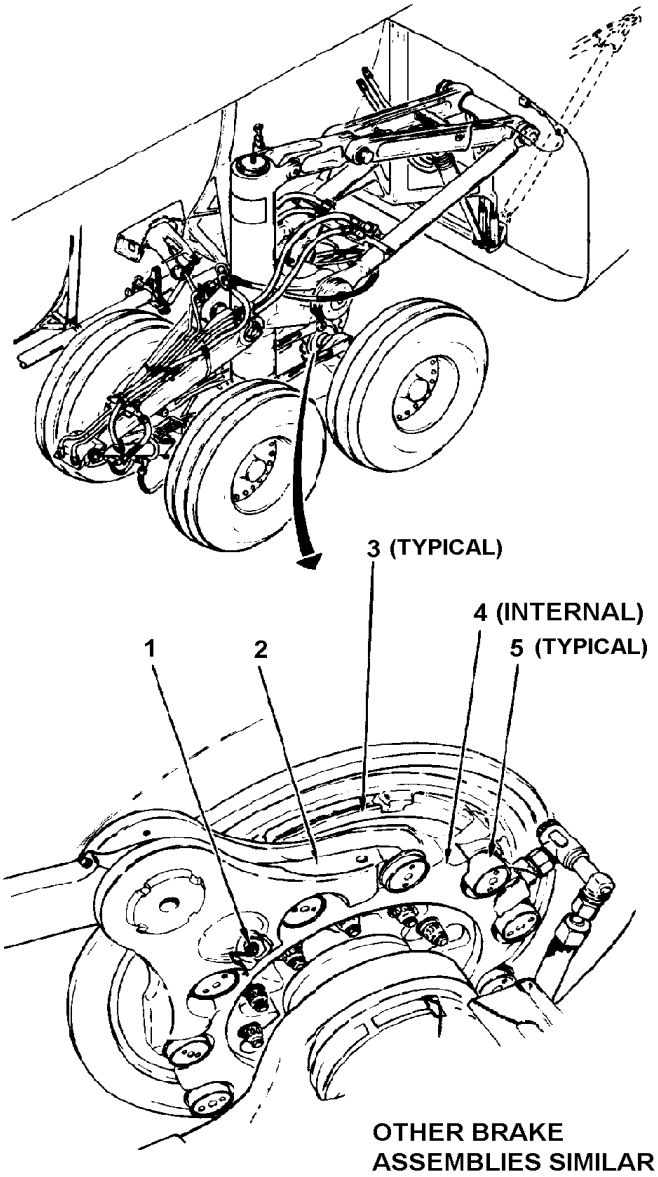

1. BLEED VALVE
2. BRAKE ASSEMBLY
3. DISC
4. PISTON (11 PLACES)
5. RELEASE SPRING HOUSING

Brake Assembly

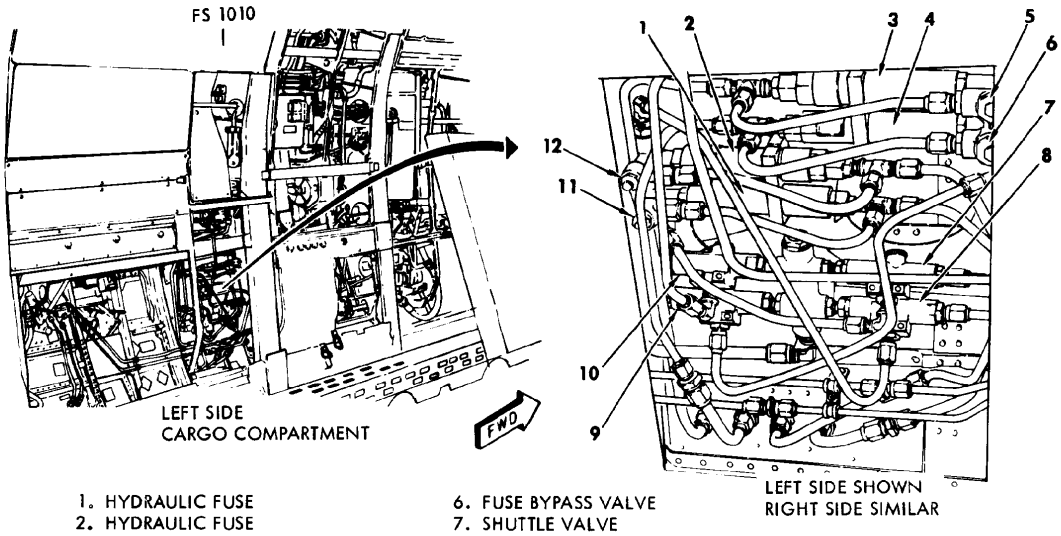

1. HYDRAULIC FUSE
2. HYDRAULIC FUSE
3. HYDRAULIC FUSE
4. HYDRAULIC FUSE
5. FUSE BYPASS VALVE
6. FUSE BYPASS VALVE
7. SHUTTLE VALVE
8. SHUTTLE VALVE
9. SHUTTLE VALVE
10. SHUTTLE VALVE
11. FUSE BYPASS VALVE
12. FUSE BYPASS VALVE

Brake Hydraulic Panel Components

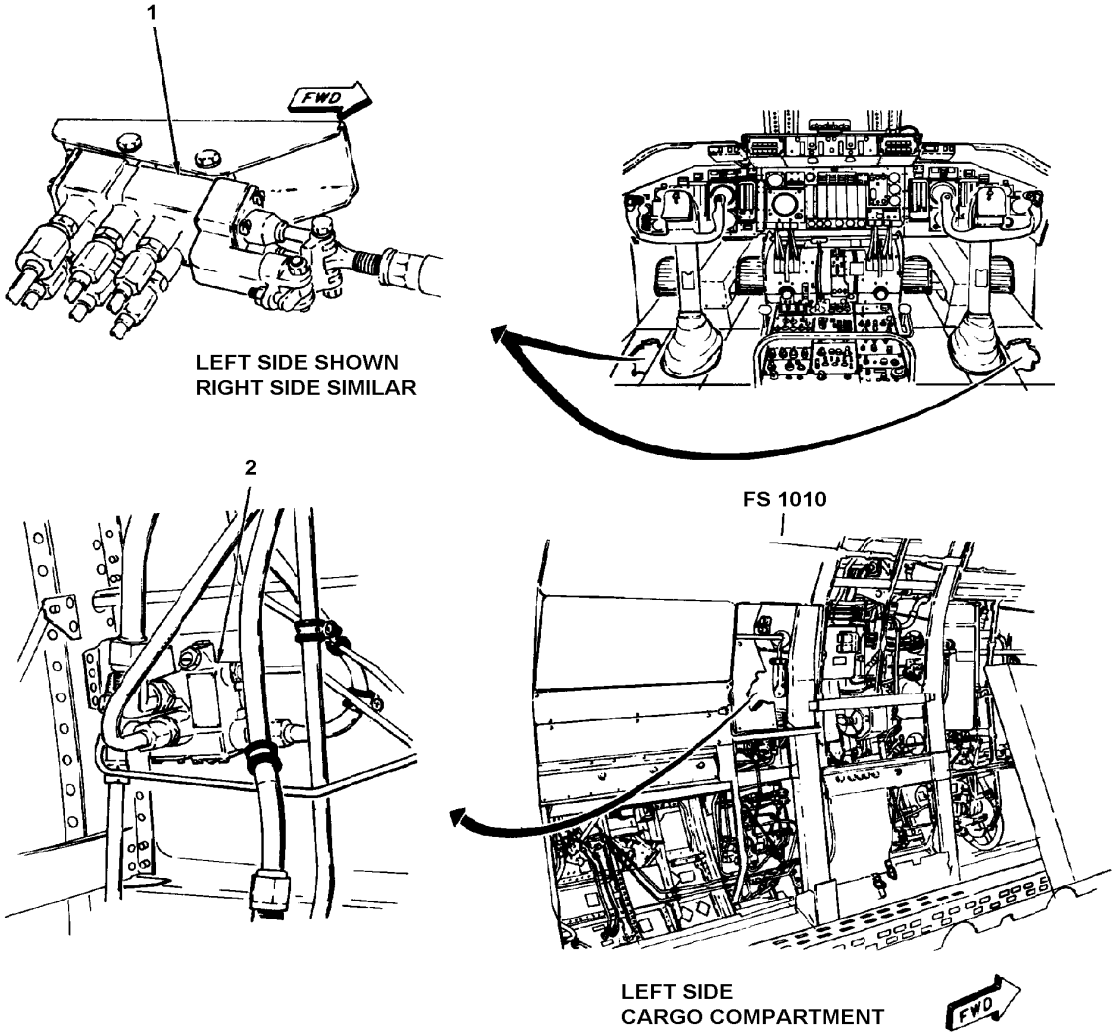

1. PILOT METERING VALVE
2. MAIN METERING VALVE

Brake Metering Valves

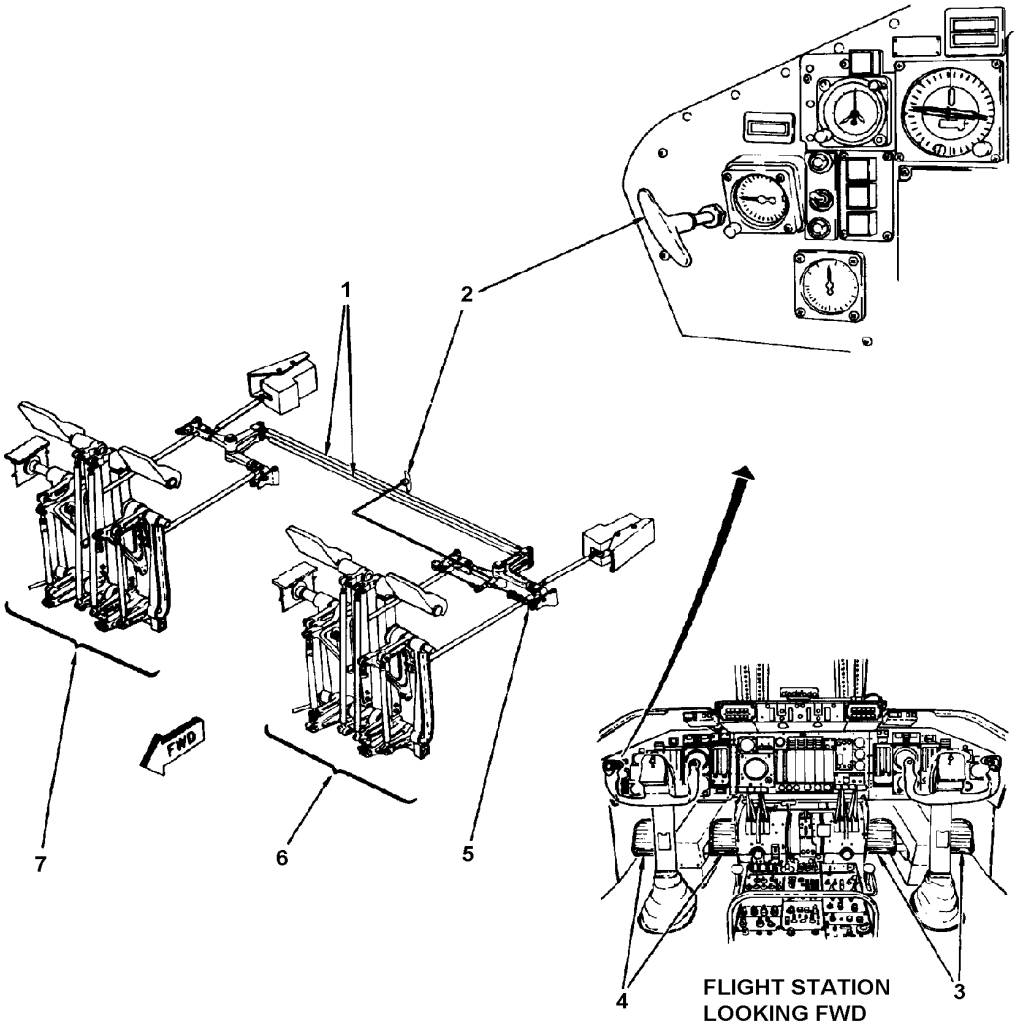

1. INTERCONNECT RODS
2. PARKING BRAKE HANDLE
3. COPILOT'S BRAKE (RUDDER) PEDALS
4. PILOT'S BRAKE (RUDDER) PEDALS
5. PARKING BRAKE LOCKING MECHANISM
6. LT BRAKE LINKAGE
7. RT BRAKE LINKAGE

Brake Pedals, Linkage, and Parking Brake

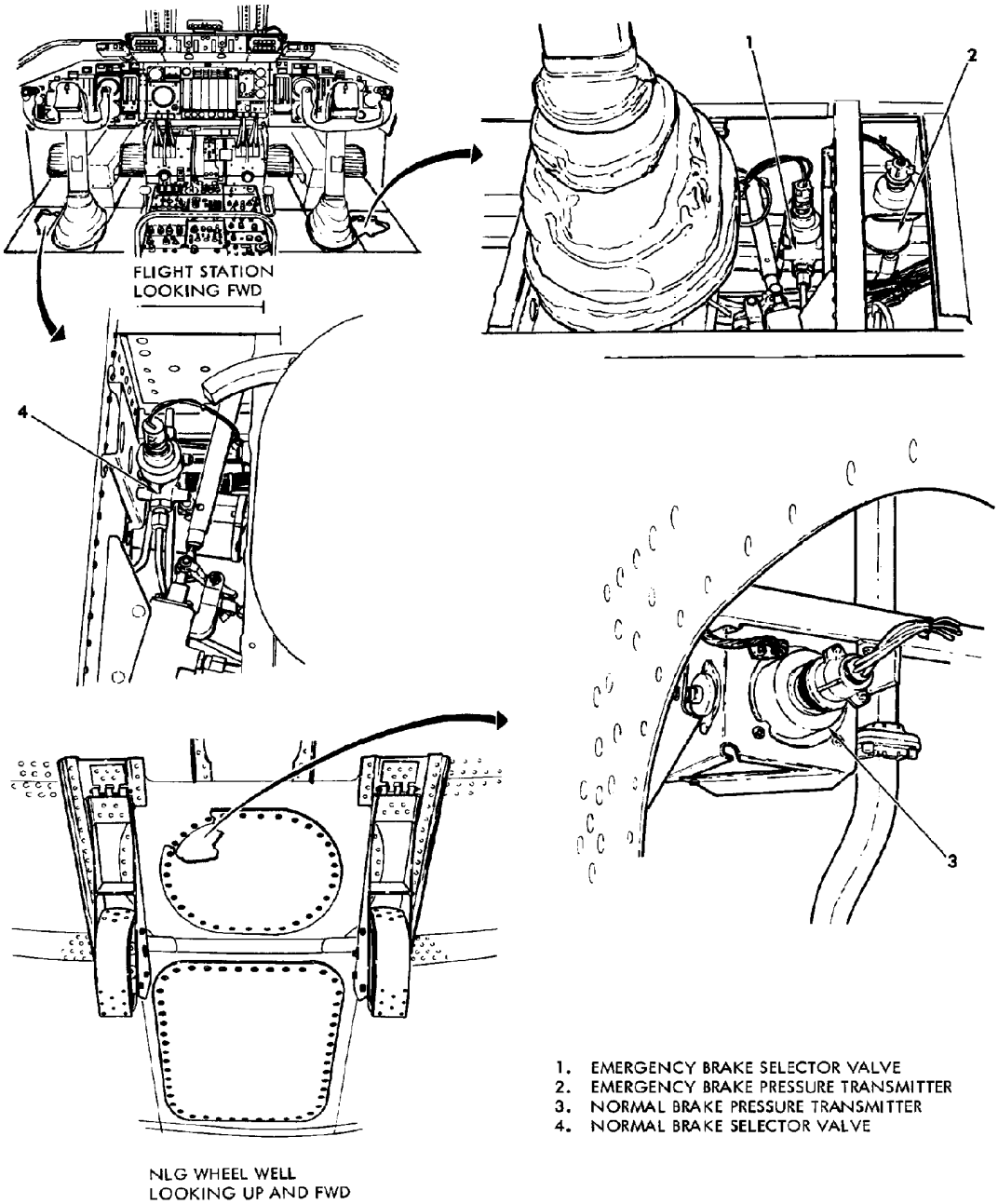

Brake Selector Valves and Pressure Transmitters

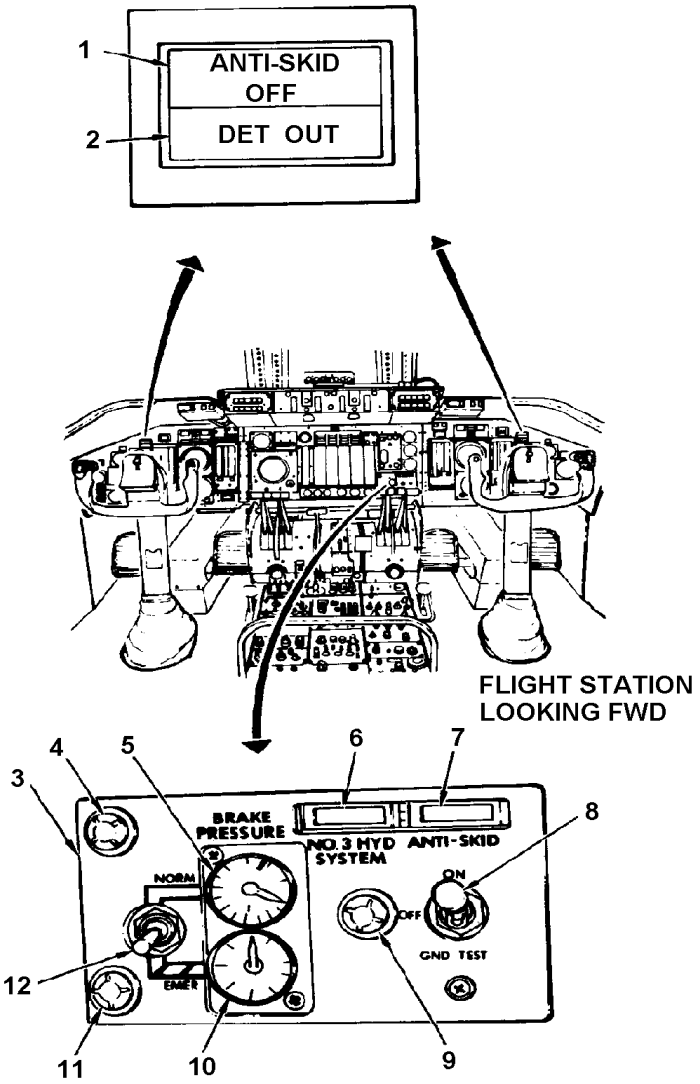

1. ANTI-SKID OFF LIGHT
2. DET OUT LIGHT
3. BRAKE AND ANTI-SKID PANEL
4. PANEL LIGHT
5. NORMAL BRAKE PRESSURE GAGE
6. PRESS ON LIGHT
7. BRAKES REL LIGHT
8. ANTI-SKID SWITCH
9. PANEL LIGHT
10. EMERGENCY BRAKE PRESSURE GAGE
11. PANEL LIGHT
12. BRAKE SELECTOR SWITCH

Brake and Anti-Skid Panel and Anti-Skid Warning Lights

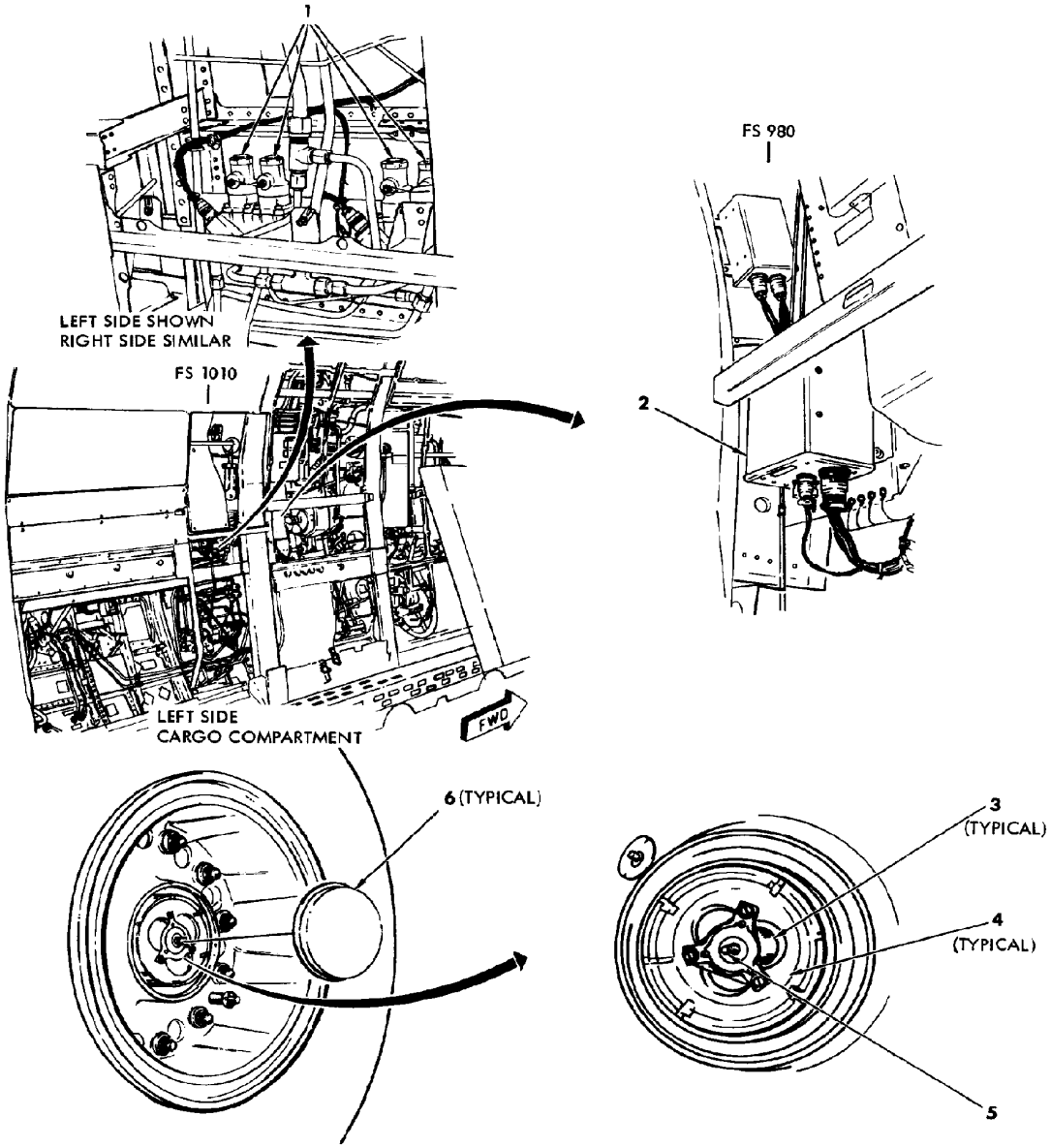

1. ANTI-SKID CONTROL VALVES
2. ANTI-SKID CONTROL BOX
3. ANTI-SKID DETECTOR
4. MLG AXLE
5. ROTOR SHAFT
6. HUB CAP

Anti-Skid Components

Nose Landing Gear (NLG) Steering Subsystem

The NLG steering system is used to steer the airplane during taxiing, take-off runs, and after landing. The airplane can be steered by either moving the rudder pedals or rotating the steering wheel located to the left of the pilot's instrument panel. The nose wheels are steered using the steering wheel at lower speeds and the rudder pedals at high speeds. The motion is relayed through a series of chains, pulleys, and cables to a steering control valve mounted over the steering actuator. The steering control valve responds to cable movement by sending No. 2 system hydraulic pressure to the appropriate end of the steering actuator. The actuator contains opposing pistons connected by a rack gear.

The rack gear meshes with a sector gear that rotates on the shock strut cylinder. Rotation of the sector gear steers the wheels by means of a torque arm assembly that connects to the nose gear axle. The rudder pedals are used to steer the airplane at higher speeds and can only turn the wheels up to eight degrees left or right. The mechanical linkage from the rudder pedals is connected to one end of a hydraulic rudder pedal steering actuator. The rudder pedal steering actuator is pressurized by No. 2 system hydraulic pressure routed through the rudder pedal steering selector valve. When the airplane lands, the rudder pedal steering selector valve is electrically actuated to pressurize the rudder pedal steering actuator, causing it to act as a fixed link between the rudder pedals and the nose gear steering system.

The rudder pedal steering actuator transmits rudder pedal movement to the lower steering column, but uses internal springs to prevent movement of the steering wheel from affecting the rudder pedals. The steering wheel is used to steer the airplane while taxiing at lower speeds. It allows the wheels to be turned up to 60 degrees in either direction. The steering wheel is mounted on an upper steering column. A gearbox connects the upper and lower steering columns and makes it easier to turn the steering wheel. The gearbox also contains a position indicator that shows how far left or right the nose wheels are turned. A sprocket on the lower steering column moves a bicycle-type chain connected to one end of a cable and pulley arrangement. The other end of the cable loop is located near the shock strut trunnion. It rotates a split shaft with overlapping paddle-shaped ends called the nose steering disconnect.

When the airplane takes off, the shock strut extends and internal centering cams automatically center (point the wheels straight ahead) the wheels so that they are in the proper position when the nose gear is retracted. When the gear is retracted, the ends of the steering disconnect separate, and the steering wheel end locks in place. This ensures that the two ends engage properly when the gear is extended.

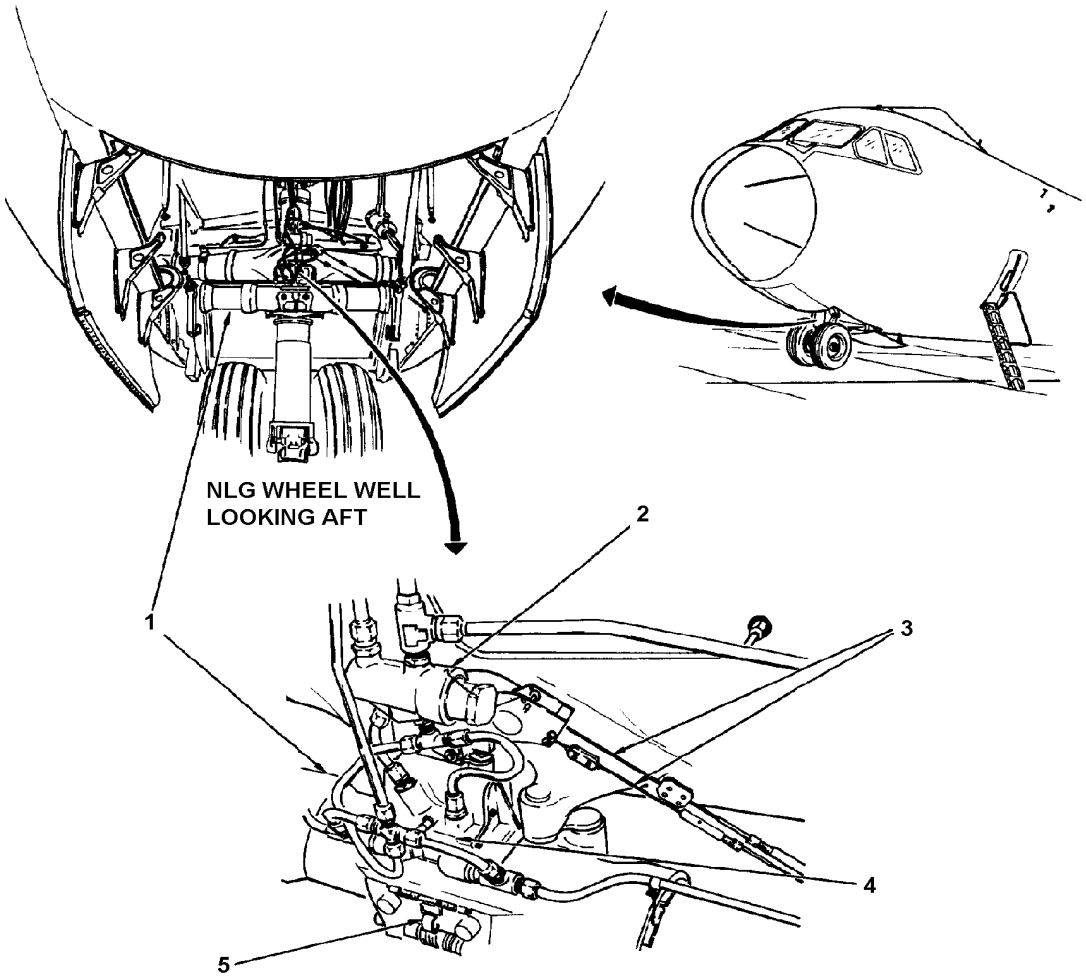

1. STEERING ACTUATOR
2. COMPENSATOR VALVE
3. STEERING CABLES
4. STEERING CONTROL VALVE
5. RIG PIN HOLE

Nose Landing Gear (NLG) Steering Actuator and Control Valve

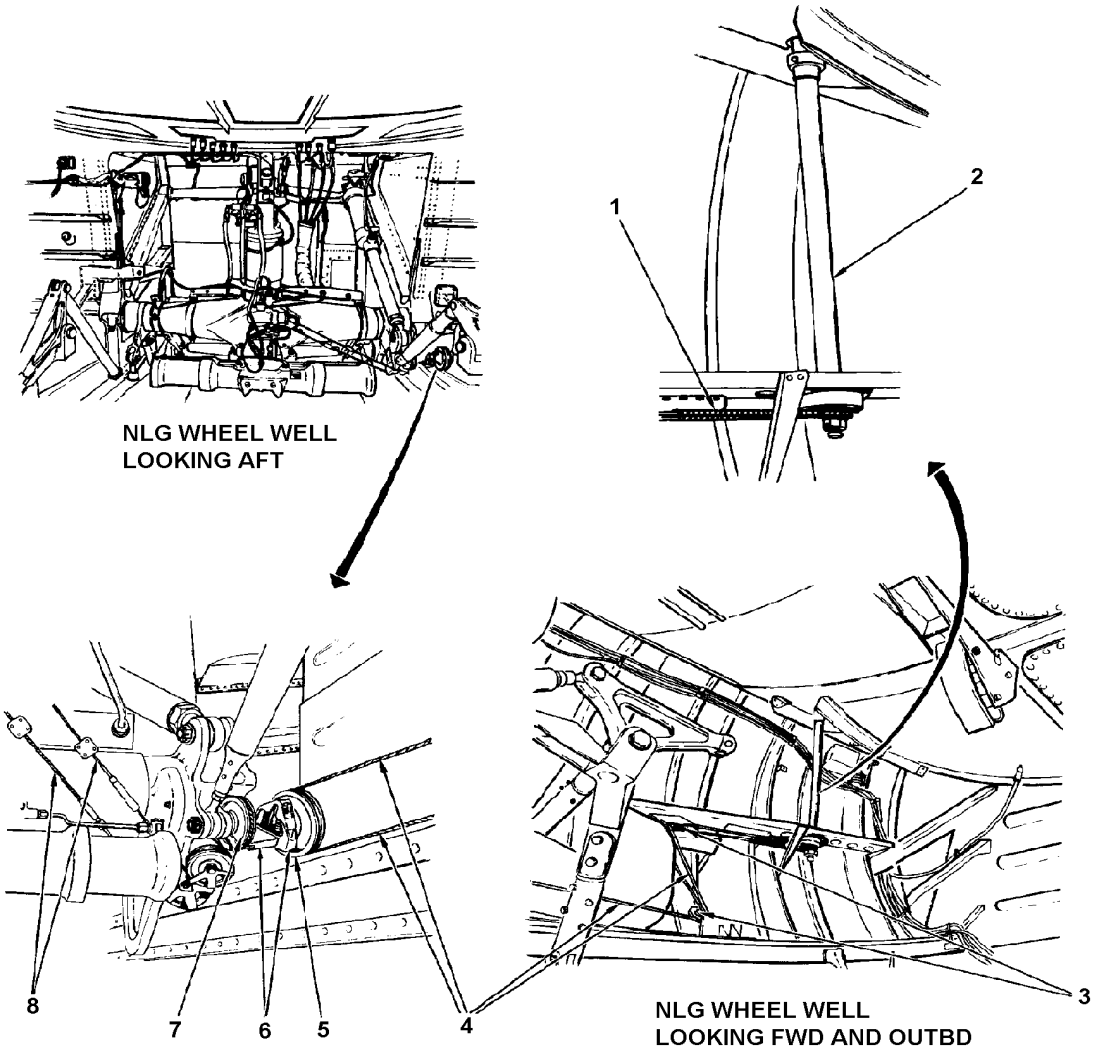

1. CHAIN
2. STEERING COLUMN
3. PULLEYS
4. CABLE LOOP
5. PULLY
6. NOSE STEERING DISCONNECT
7. PULLEY
8. INPUT CABLES

Nose Landing Gear (NLG) Steering Cables, Pulleys, and Disconnect

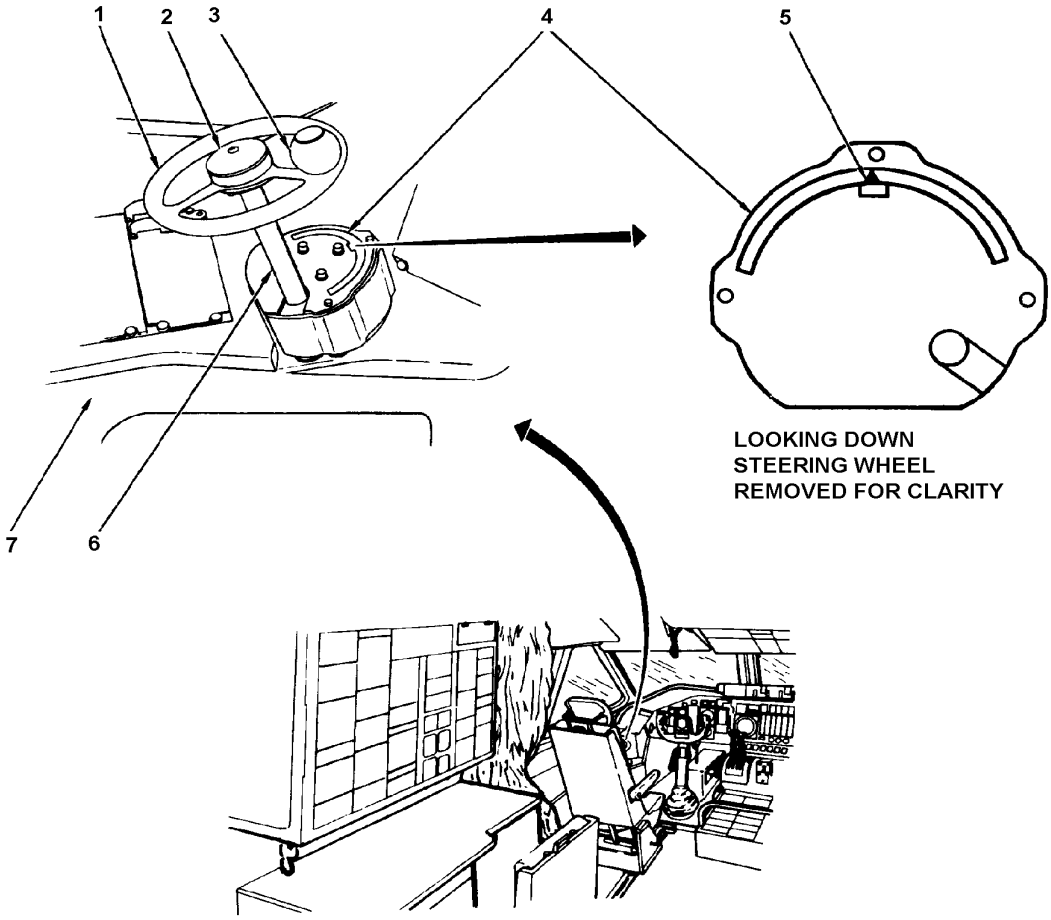

1. STEERING WHEEL
2. INTERPHONE BUTTON
3. KNOB
4. GEARBOX
5. POSITION INDICATOR
6. UPPER STEERING COLUMN
7. PILOT'S SIDE CONSOLE

Nose Landing Gear (NLG) Steering Wheel, Gearbox, and Position Indicator

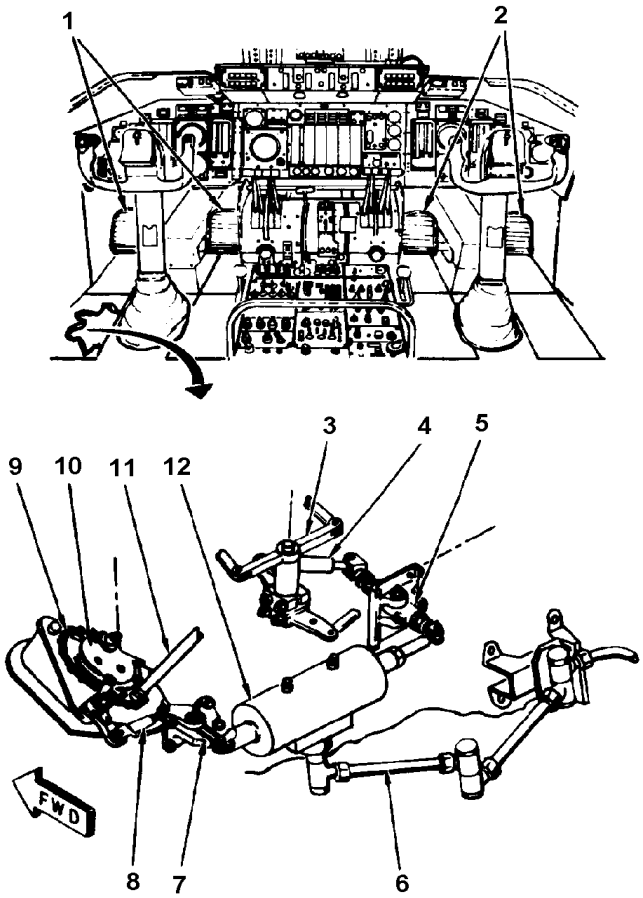

1. PILOT'S RUDDER PEDALS
2. COPILOT'S RUDDER PEDALS
3. RUDDER SYSTEM LEVER
4. SPRING CARTRIDGE
5. ADJUSTABLE LEVER
6. HYDRAULIC TUBING
7. INPUT LEVER
8. STEERING ROD
9. DRIVE CHAIN
10. INTERCONNECT ASSEMBLY
11. LOWER STEERING COLUMN
12. RUDDER PEDAL STEERING ACTUATOR

Rudder Pedal Steering Linkage, Actuator, and Interconnect

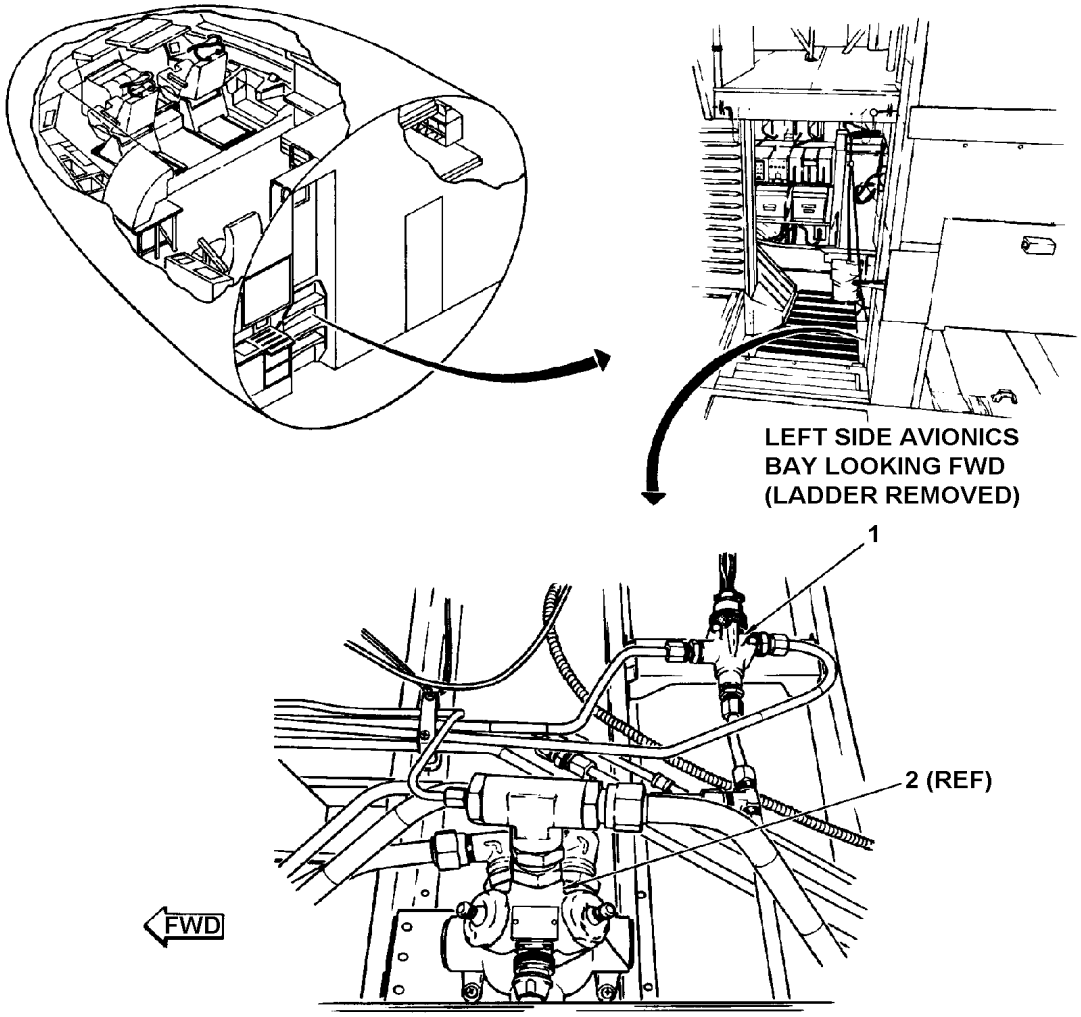

1. RUDDER PEDAL STEERING SELECTOR VALVE
2. NLG SELECTOR VALVE

Rudder Pedal Steering Selector Valve

Landing Gear Position and Warning Subsystem

The position and warning subsystem indicates the position of the left and right MLG and the NLG. The nose gear and left and right main gear are all controlled by a single landing gear control handle. The control handle is part of a landing gear control panel located on the right side of the center instrument panel. The control panel also has position indicators for each of the gear, a test button for the control handle warning lights and horn, a silencing button for the horn, and a manual release for the control handle lock. Several landing gear position and lock-actuated switches are used in the landing gear control and warning circuits.

Each main gear has a downlock switch, a pressure sequence switch, a bogie position switch, a pair of touchdown switches, an uplock switch, and a flapper over-center lock switch. The nose gear has an up (position No. 1) switch, a lock switch, and a positive down (position No. 4) switch. When the airplane takes off and the control handle is placed in the UP position, the landing gear up relay is energized. When energized, the landing gear up relay allows DC power to be sent to the up solenoids of the main and NLG selector valves and the main gear down lock selector valve. The main gear downlock actuator releases the downlock and the main gear actuator retracts the gear. Hydraulic pressure also causes the nose gear up/down lock actuator to release the up/down lock and the nose gear actuator to retract the gear.

When the MLG is fully retracted, it locks in the main gear uplock and the wheel well doors are locked closed. These actions trigger the uplock switch and the flapper over-center lock switch to relieve pressure from the uplock and doors uplock actuators. When the nose gear is fully retracted and the up/down lock mechanism locks, the up (position No. 1) switch and the lock switch are actuated, shutting off hydraulic pressure to the nose gear actuator and the up/down lock actuator. Placing the landing gear control handle to the LG DOWN position sends DC power to the down solenoids of the main and nose gear selector valves and the unlock solenoid of the MLG door uplock selector valve. The main gear door lock is released and the main gear uplock linkage is unhooked from the uplock. The MLG actuator extends the gear until the pressure sequence switch signals the downlock selector valve to extend the downlock actuator. This locks the gear and causes the downlock switch to be actuated to the locked position. At the same time, the NLG up/down lock actuator unlocks the nose gear, and the nose gear actuator extends it.

When the nose gear is fully extended, the up/down lock actuator locks the gear and actuates the lock switch, while the top of the shock strut contacts the positive down (position No. 4) switch. Each position indicator on the landing gear control panel displays the word UP when its corresponding gear is up and locked. A picture of a wheel appears when the gear is down and locked, and diagonal stripes indicate the gear is in transit. The main gear indicators are controlled through the downlock and uplock switches. The nose gear indicator is controlled by the up switch and lock switch for up, and the positive down switch and lock switch for down. A small panel to the left of the landing gear control panel contains two bogie position indicators, one for each MLG. As the main gear extends, the axle beam (bogie) is positioned perpendicular to the shock strut. This actuates the bogie position switch and causes the bogie position indicator to display a wheel. If the bogie is not in the proper position for landing, the position indicator will show diagonal stripes.

Red warning lights in the landing gear control handle come on whenever the handle and the gear are not in the same position. This means the lights will come on while the gear is being extended or retracted, but will only stay on if any of the gear fails to fully extend or retract. This function of the warning lights is controlled through the main gear uplock, downlock, and flapper over-center lock switches, the nose gear lock switch, and the up and positive down switches.

The warning lights will also come on if any of the throttles are retarded below minimum cruise power without lowering the landing gear. This also sets off a warning horn in the flight station. The horn can be silenced by pressing the HORN SILENCE button on the landing gear control panel, but will sound again if another throttle is retarded past minimum cruise. On airplanes modified by T.O. IC-141B-506, if the AERIAL REFUEL MASTER switch is in the ON position when any of throttles is retarded, the warning lights and warning horn will not come on. The warning horn is also connected to the flap system and will sound if the flap control handle is placed to the LANDING position before the landing gear is down and locked.

The HORN SILENCE button will not turn off the horn in this situation. Only extending the landing gear or moving the flap control handle to a different position will silence the horn. The warning lights and warning horn can be tested by pressing the WARN LIGHT & HORN TEST button on the landing gear control panel. When the airplane lands, its weight compresses the main gear shock struts and actuates a pair of touchdown switches on each MLG. Actuating the touchdown switches causes a solenoid in the landing gear control panel to lock the control handle in the DN position.

The control handle lock prevents the landing gear from being accidentally retracted while the airplane is on the ground. If the handle fails to unlock after takeoff, it can be released manually with the DOWN LOCK RELEASE button on the landing gear control panel. On airplanes which have not had T.O. IC-141-694 incorporated, the control handle locking solenoid is spring-loaded to the locked position. If necessary, the control handle can be released manually using the LOCK RELEASE switch on the landing gear control panel.

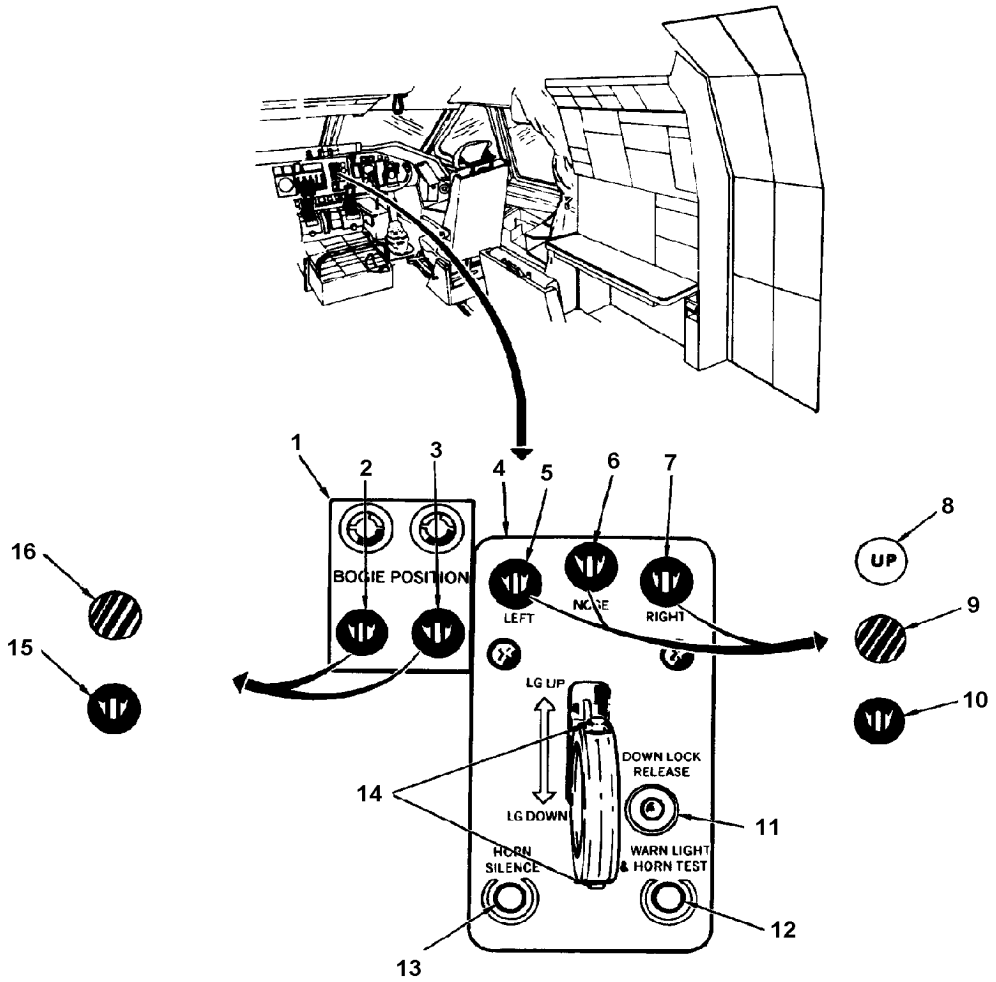

1. BOGIE POSITION INDICATOR PANEL
2. LEFT MLG BOGIE POSITION INDICATOR
3. RIGHT MLG BOGIE POSITION INDICATOR
4. LANDING GEAR CONTROL PANEL
5. LEFT MLG POSITION INDICATOR
6. NLG POSITION INDICATOR
7. RIGHT MLG POSITION INDICATOR
8. UP AND LOCKED INDICATION
9. IN TRANSIT INDICATION
10. DOWN AND LOCKED INDICATION
11. CONTROL HANDLE DOWN LOCK RELEASE BUTTON
12. WARNING LIGHT AND HORN TEST SWITCH
13. HORN SILENCE SWITCH
14. CONTROL HANDLE WARNING LIGHTS
15. BOGIE IN POSITION INDICATION
16. BOGIE NOT IN POSITION INDICATION

Landing Gear Control Panel Position and Warning Components

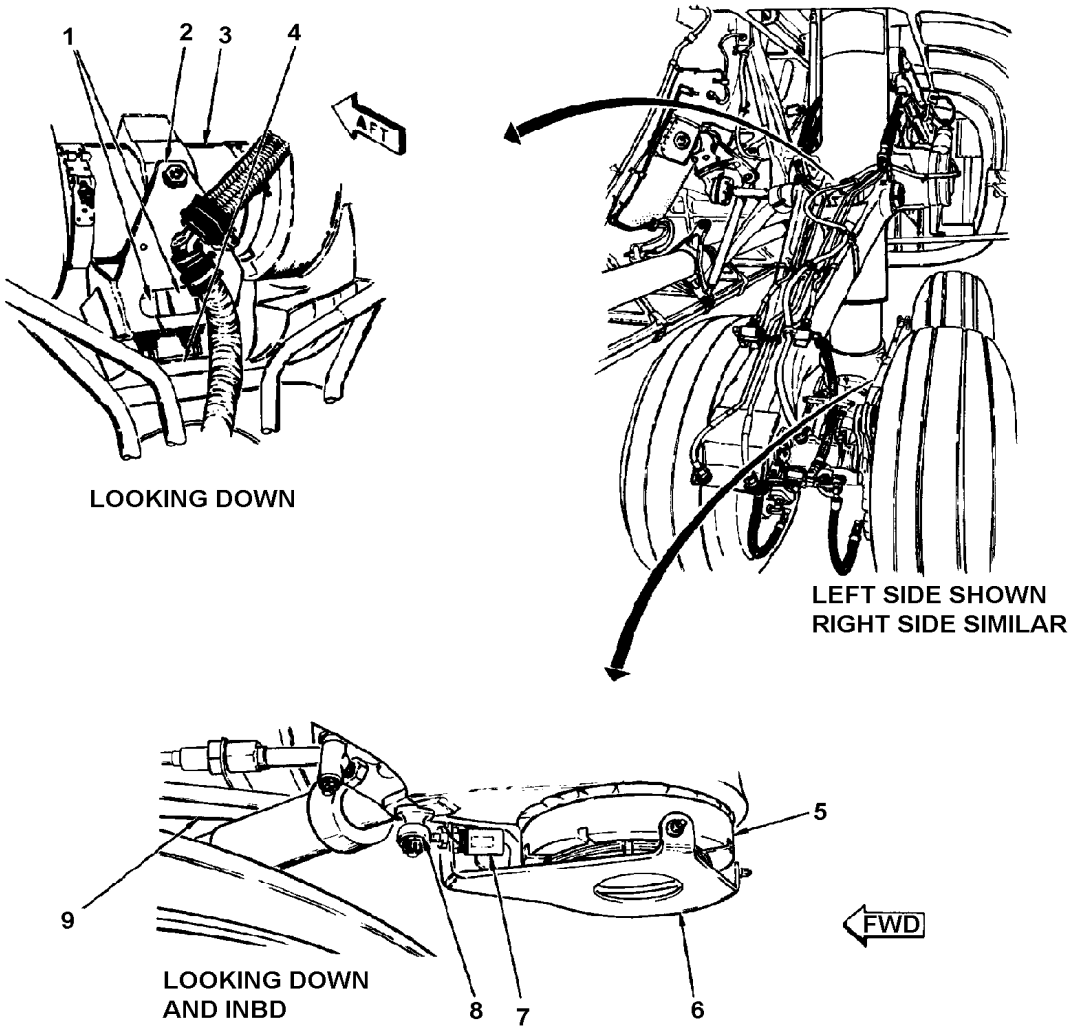

1. TOUCHDOWN SWITCHES
2. BRACKET
3. SPACER ASSEMBLY
4. CAM
5. NUT
6. BRACKET
7. BOGIE POSITION SWITCH
8. ROLLER
9. AXLE BEAM

Bogie Position and Touchdown Switches

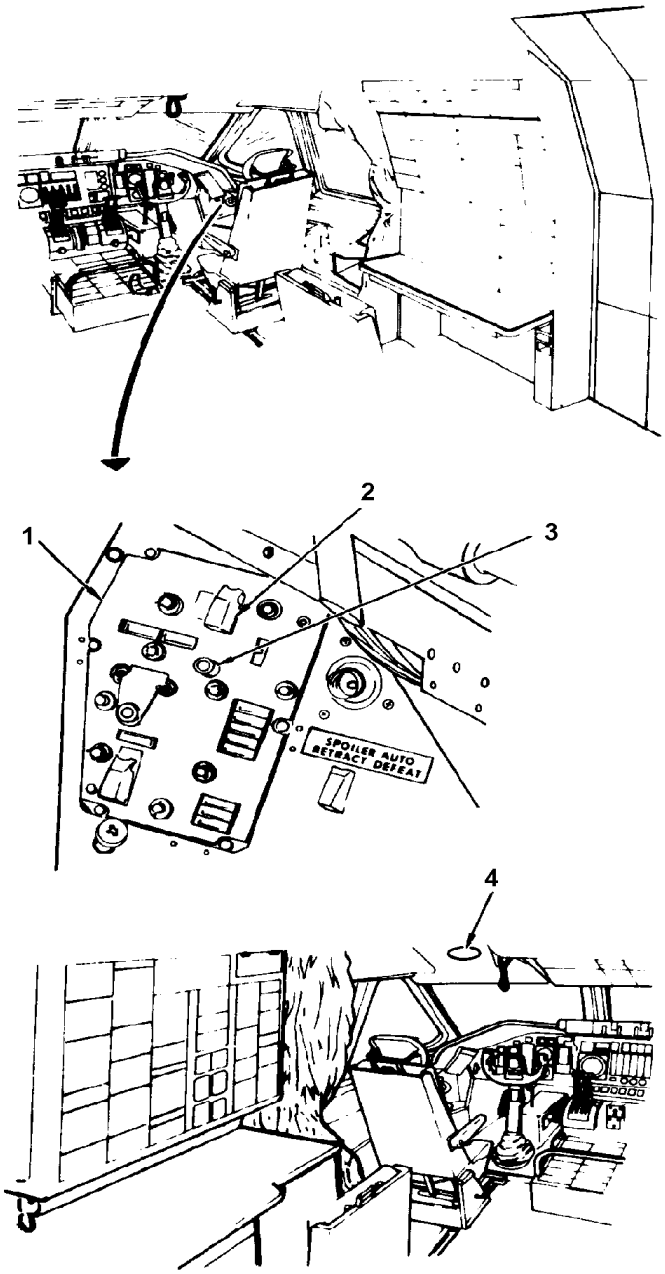

1. COPILOT'S ADS PANEL
2. GEAR-UP WARNING HORN SWITCH
3. INDICATOR LIGHT
4. FLIGHT STATION WARNING HORN

Flight Station Warning Horn and Gear-Up Warning Horn Switch

LIGHTING SYSTEM

General Description

The lighting system consists of the interior lighting (flight station and cargo compartment), exterior lighting, and 11 emergency exit lights. The interior lighting provides general illumination of the flight station, cargo compartment, supplementary instrument lighting, and lighting aft of the airplane during cargo loading. Exterior lighting provides light for landing, taxiing, takeoff, wing inspection, formation flying, recognition purposes, and aerial refueling (A/R). An emergency exit light is near each emergency exit and at the troop and crew entrance doors.

Flight Station Lighting Subsystem

The flight station lighting subsystem provides general illumination of the flight station and supplementary lighting of instruments and control panels. Overhead dome lights, instrument lights, instrument panel lights, utility lights, and reading lights comprise the flight station lighting. In addition, a master caution warning system, consisting of annunciator panel warning lights, a control unit, two CAUTION lights and reset switches, is included with flight station lighting.

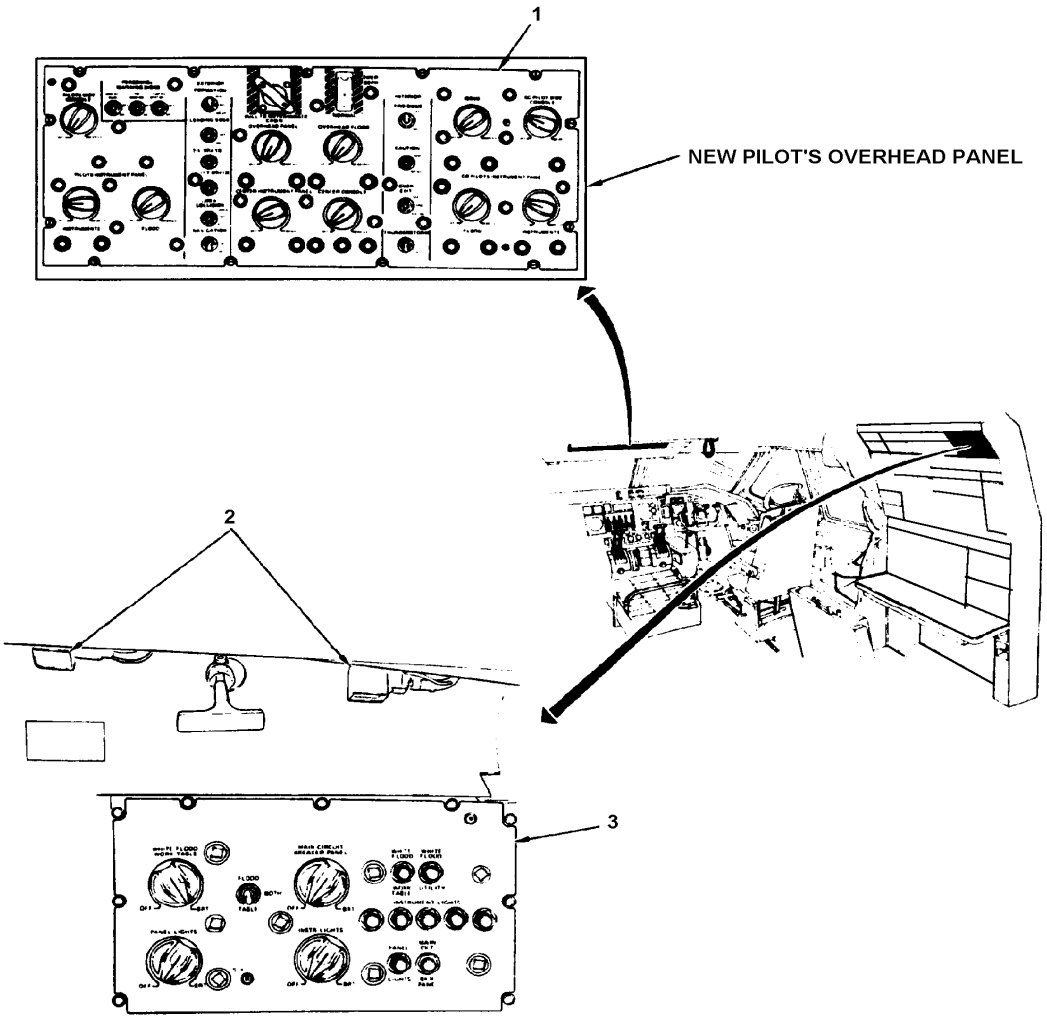

1. PILOTS' OVERHEAD PANEL
2. TYPICAL PANEL FLOOD LIGHTS
3. FLIGHT ENGINEER'S LIGHT CONTROL PANEL

Flight Station Lighting System Components (Sheet 1 of 4)

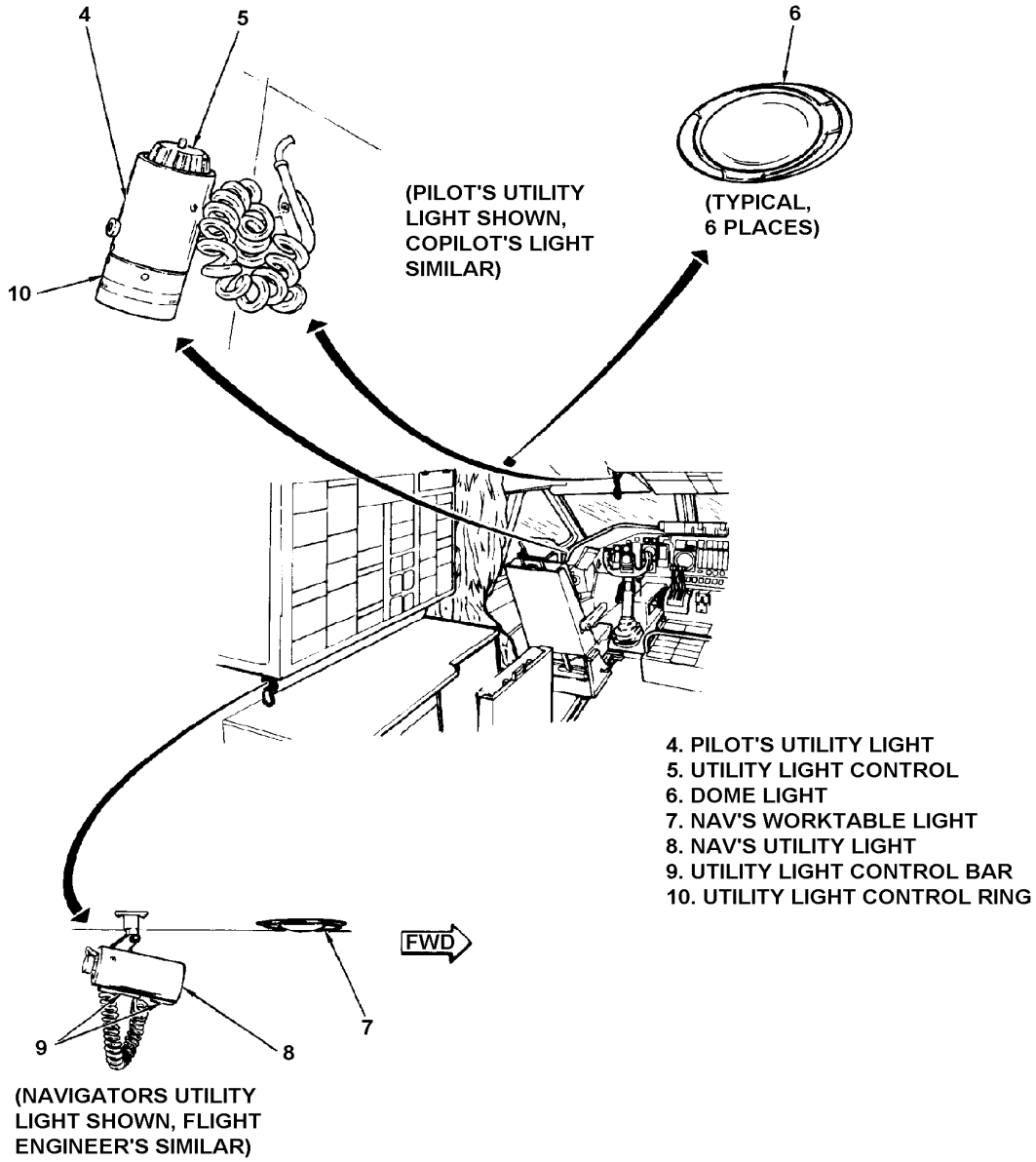

Flight Station Lighting System Components (Sheet 2 of 4)

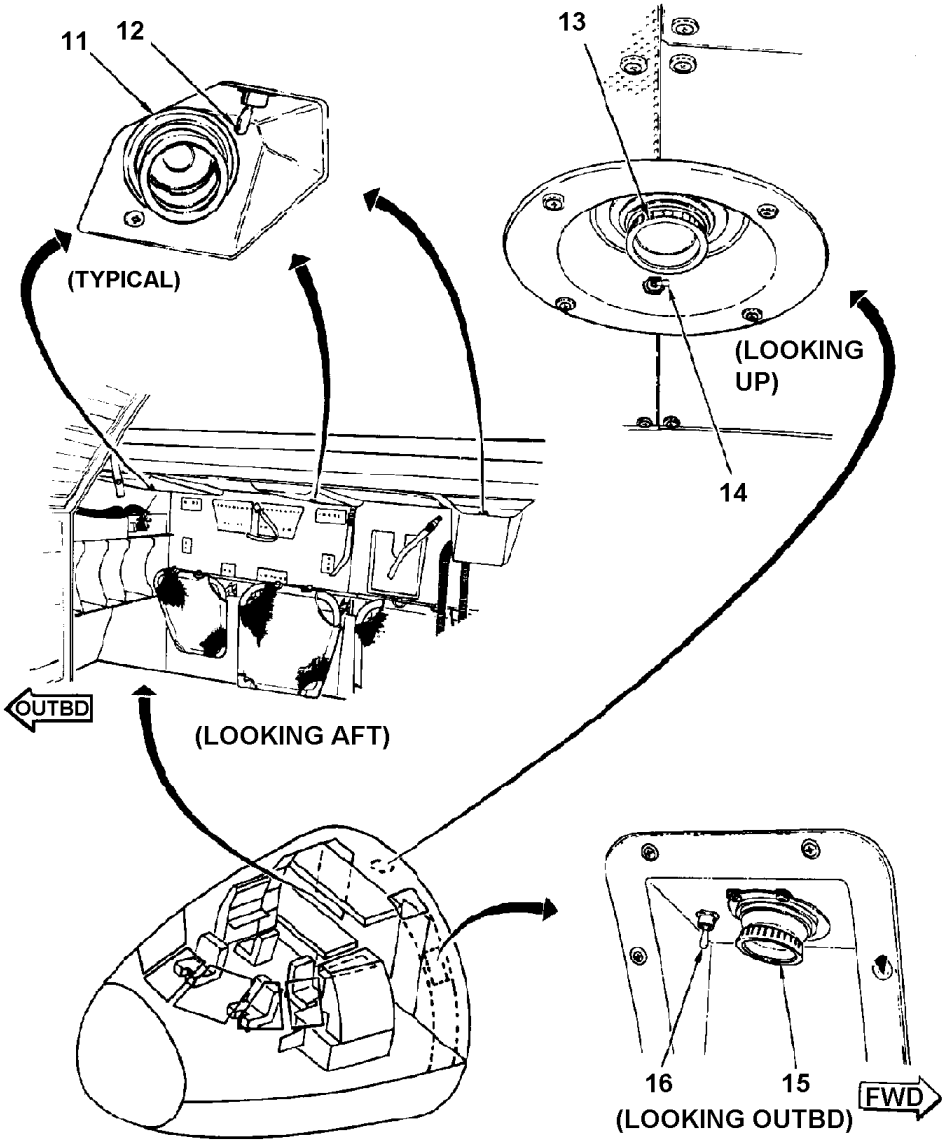

11. LOWER BUNK READING LIGHT
12. LOWER BUNK READING LIGHT SWITCH
13. UPPER BUNK READING LIGHT
14. UPPER BUNK READING LIGHT SWITCH
15. OUTBOARD SEAT READING LIGHT
16. OUTBOARD SEAT READING LIGHT SWITCH

Flight Station Lighting System Components (Sheet 3 of 4)

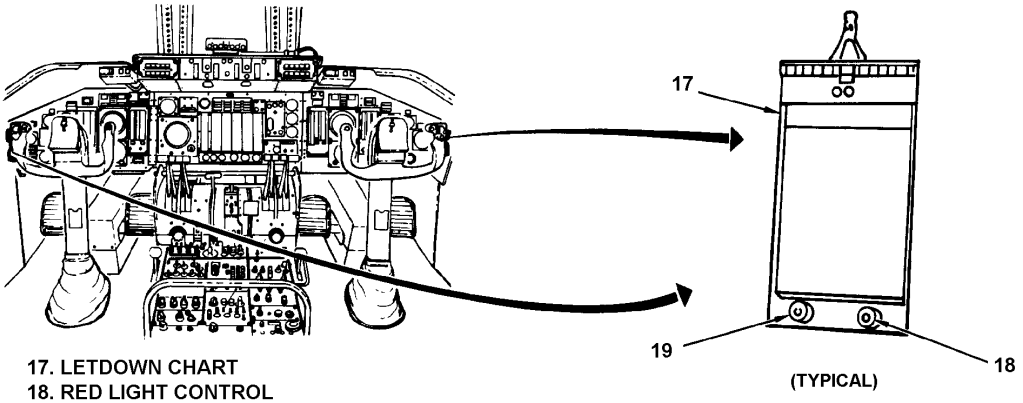

17. LETDOWN CHART
18. RED LIGHT CONTROL
19. WHITE LIGHT CONTROL

Flight Station Lighting System Components (Sheet 4 of 4)

Cargo and Service Compartment Lighting Subsystem

The cargo and service compartment lighting subsystem includes all lighting for the cargo compartment and housing of various components and accessories. General lighting throughout the cargo compartment is provided by overhead and dome lights. Service lighting is available in the lavatory, under flight deck rack area, aft crawlway and vertical stabilizer tunnel, nose and main wheel wells, cargo loading area, and paratroop jump platform area.

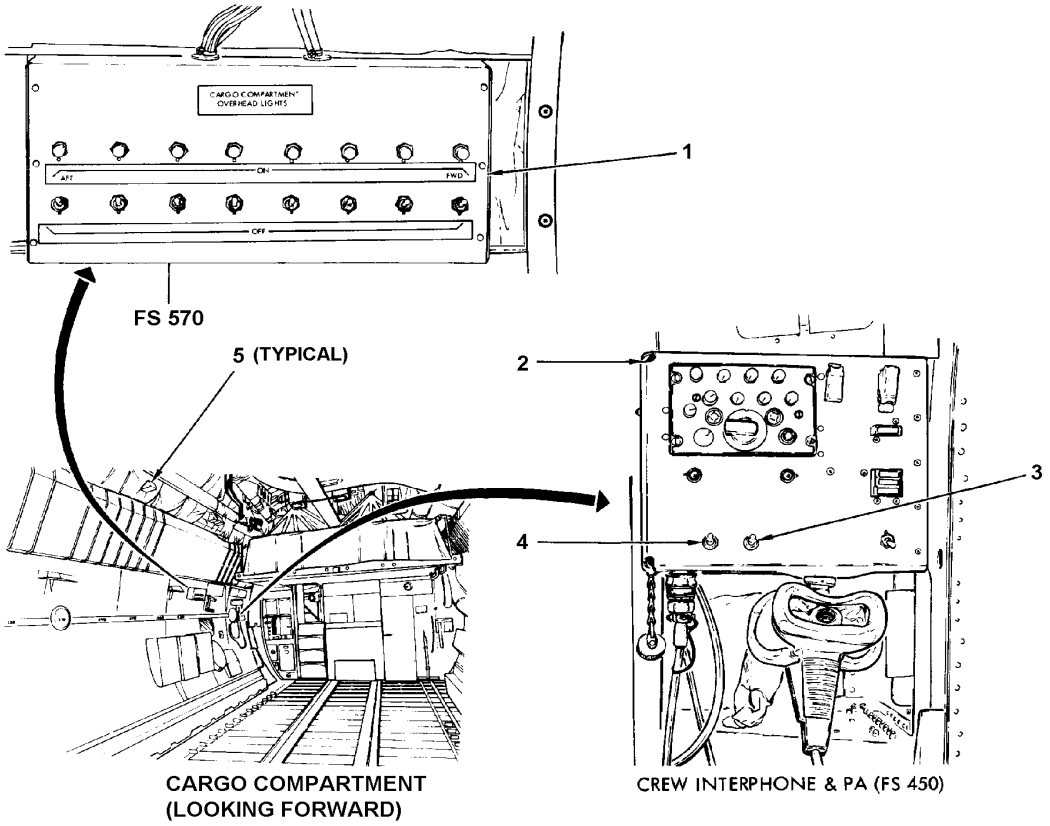

1. CARGO COMPARTMENT OVERHEAD LIGHTS PANEL
2. FWD CREW INTERPHONE AND PA PANEL
3. CARGO COMPARTMENT LIGHTS BRIGHT/DIM SWITCH
4. CARGO COMPARTMENT LIGHTS ON/OFF SWITCH
5. TYPICAL CARGO COMPARTMENT WHITE DOME LIGHT

Cargo Compartment Lighting System Components (Sheet 1 of 5)

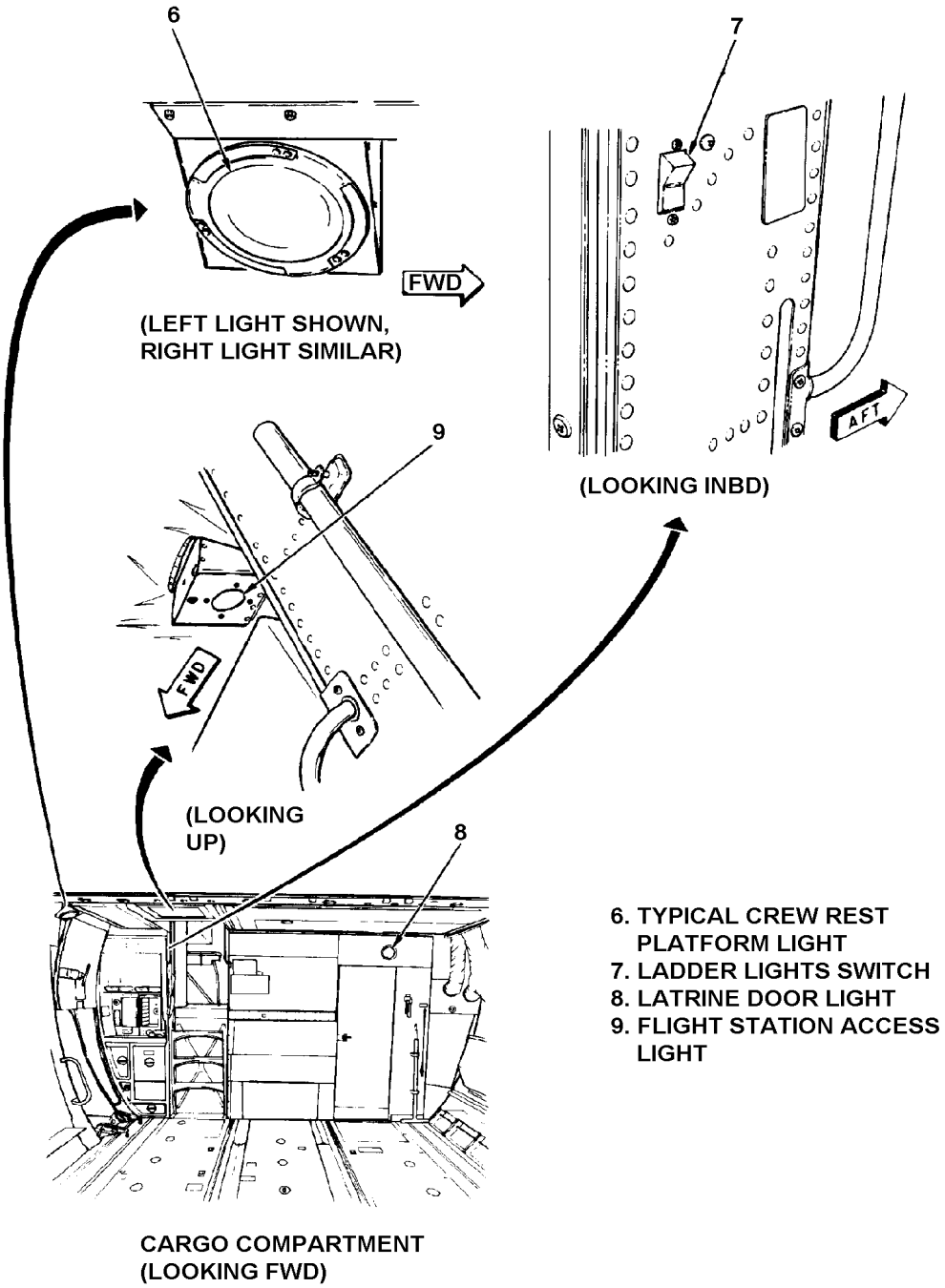

Cargo Compartment Lighting System Components (Sheet 2 of 5)

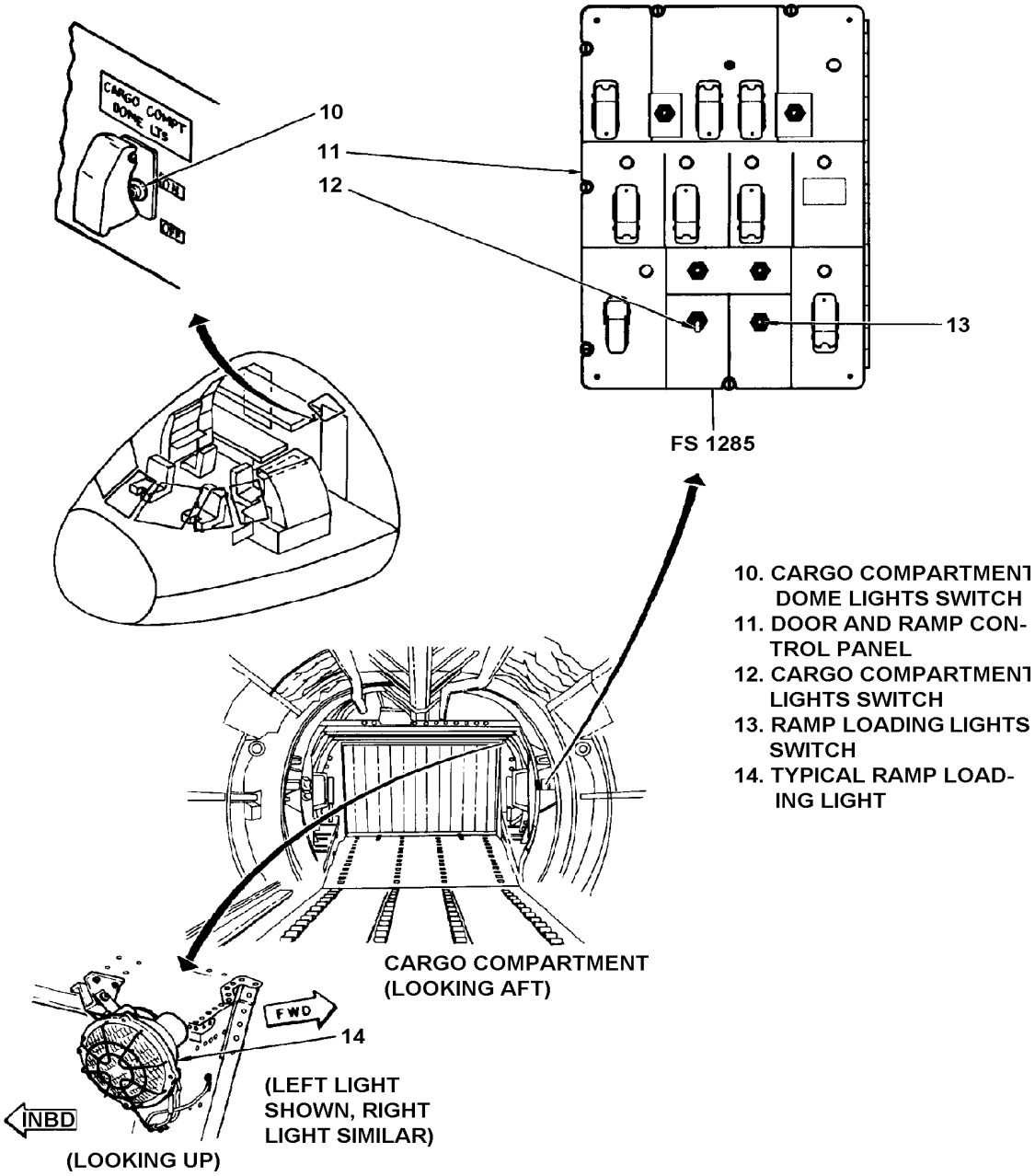

Cargo Compartment Lighting System Components (Sheet 3 of 5)

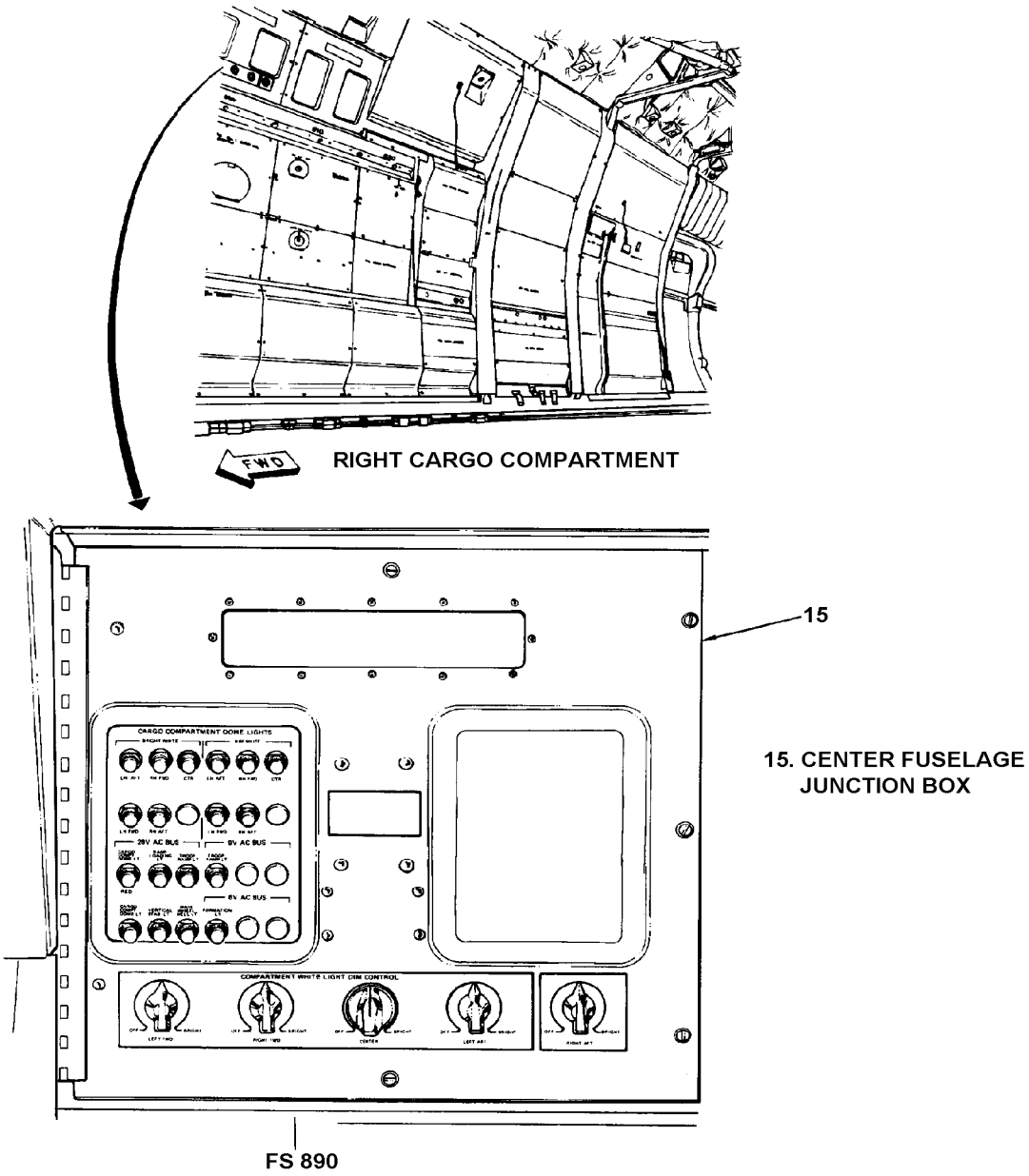

Cargo Compartment Lighting System Components (Sheet 4 of 5)

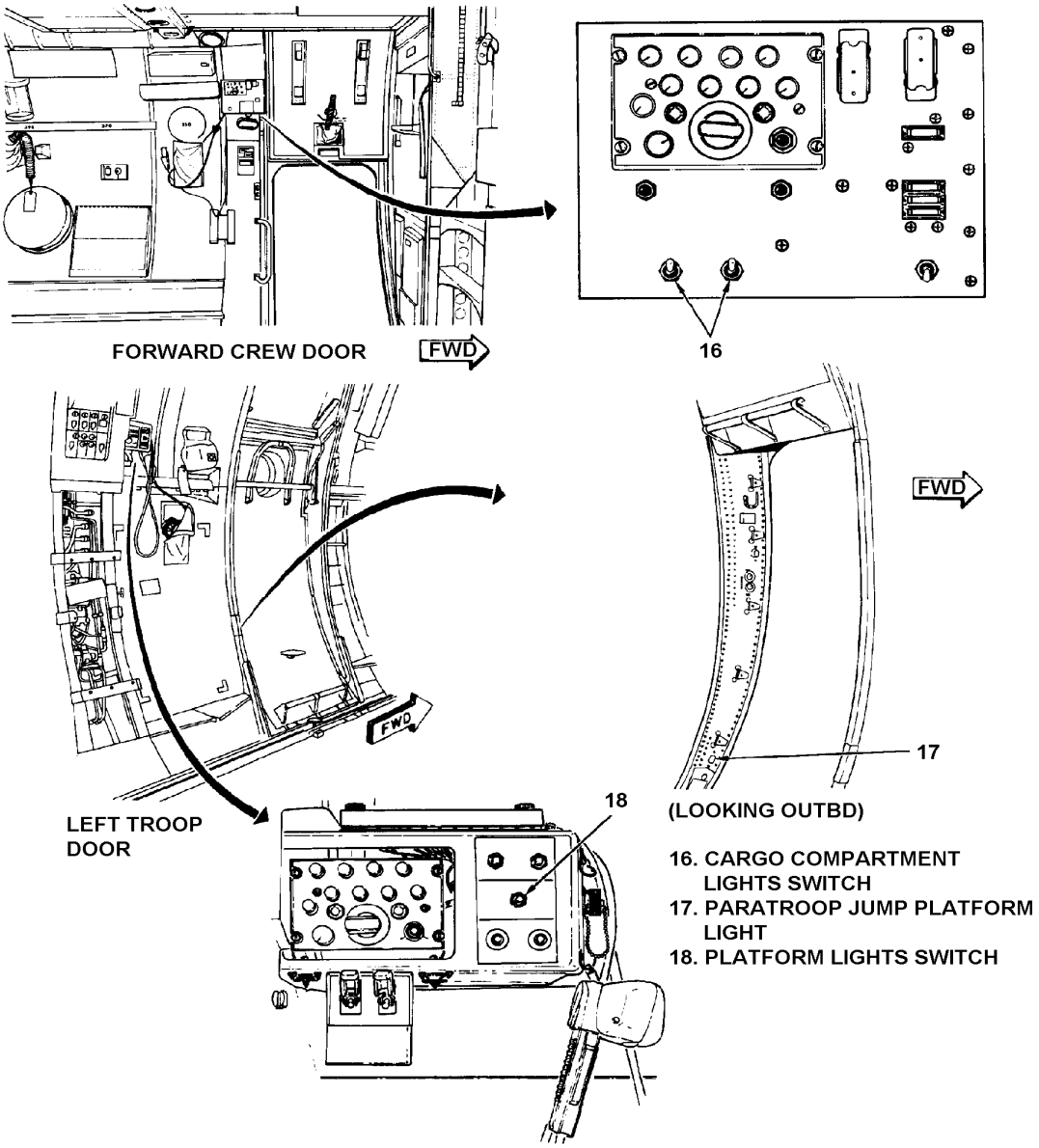

Cargo Compartment Lighting System Components (Sheet 5 of 5)

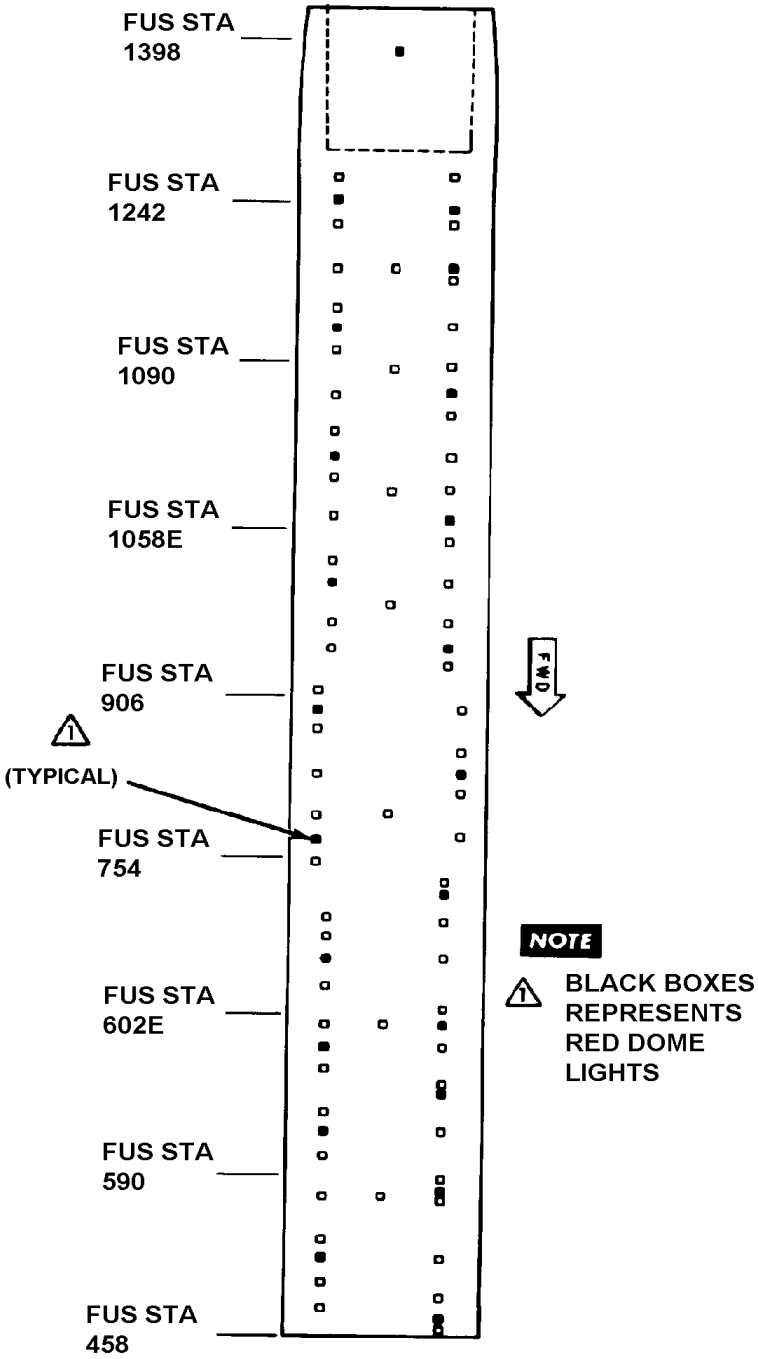

Cargo Compartment Dome Lights Locations

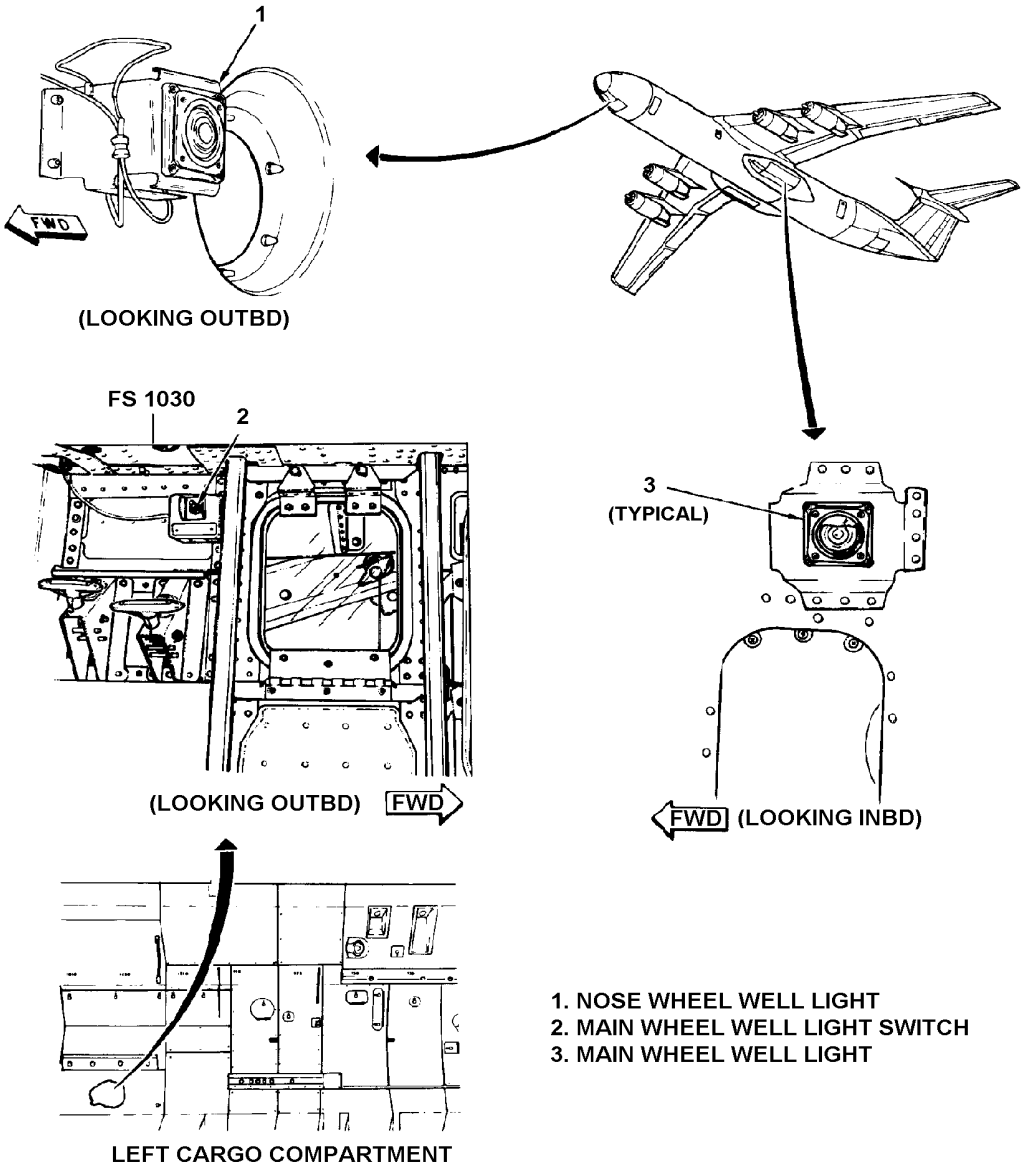

1. NOSE WHEEL WELL LIGHT
2. MAIN WHEEL WELL LIGHT SWITCH
3. MAIN WHEEL WELL LIGHT

Service Compartment Lighting System Components (Sheet 1 of 3)

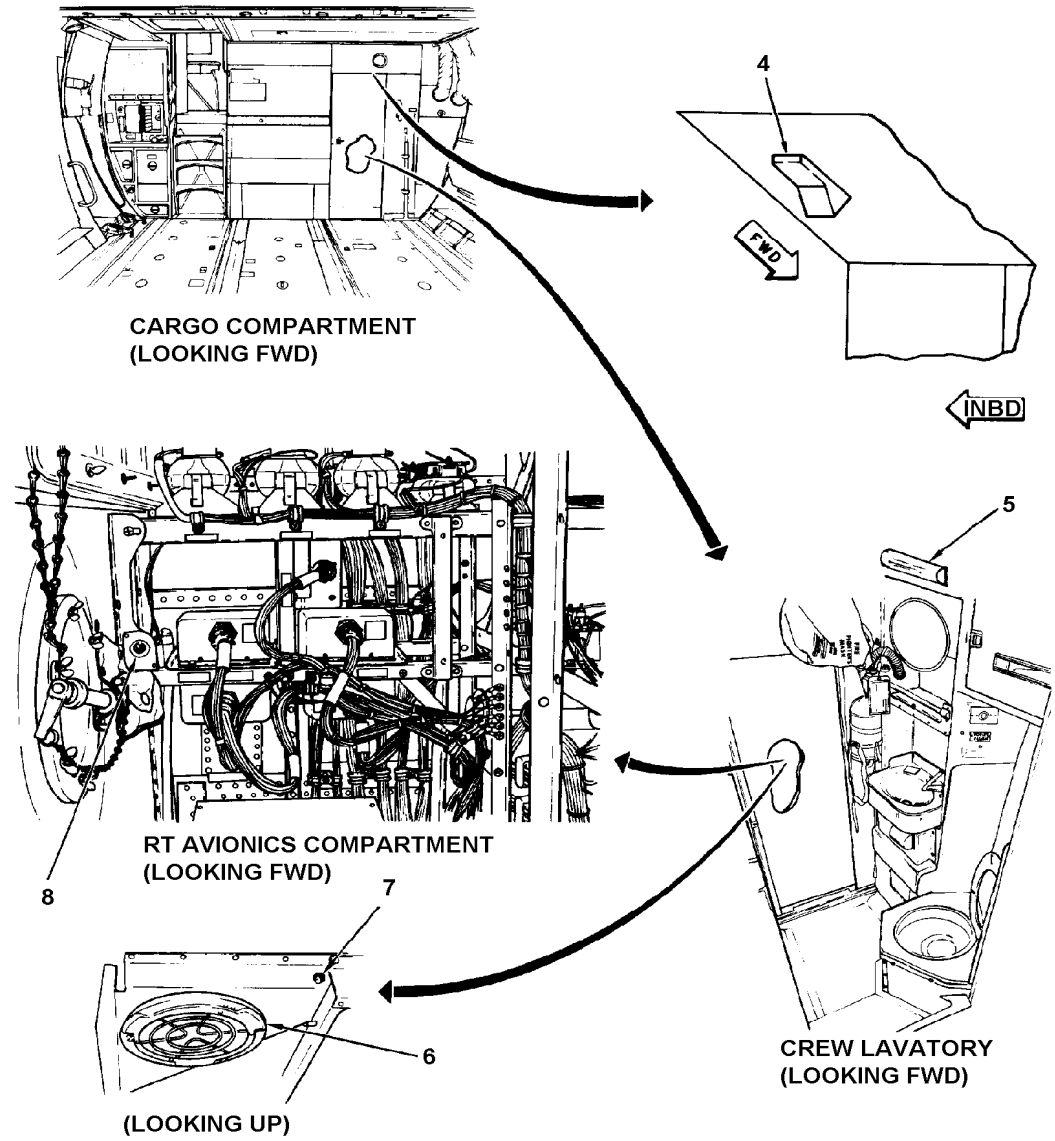

RIGHT AVIONICS COMPARTMENT
LIGHT SHOWN, LEFT LIGHT SIMILIAR

4. LAVATORY LIGHT SWITCH
5. LAVATORY LIGHT
6. AVIONICS COMPARTMENT LIGHT
7. AVIONICS COMPARTMENT LIGHT SWITCH
8. NOSE WHEEL LIGHT SWITCH

Service Compartment Lighting System Components (Sheet 2 of 3)

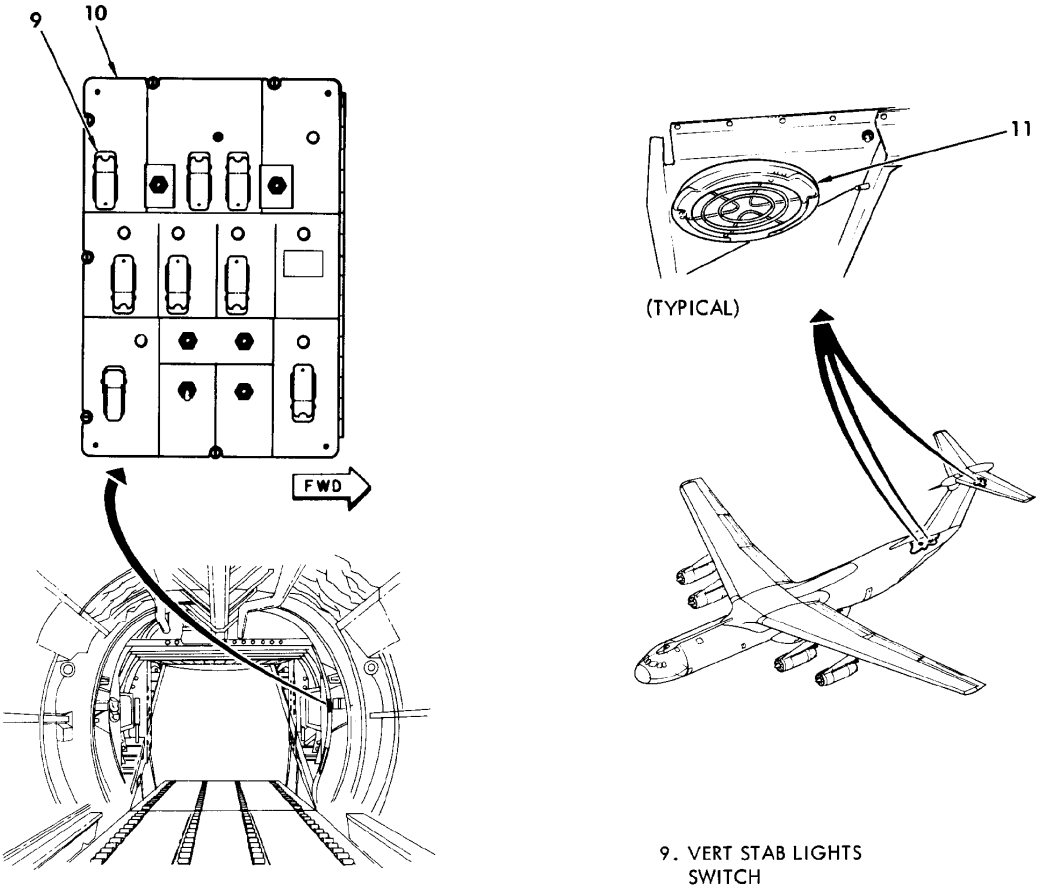

CARGO COMPARTMENT
(LOOKING AFT)

9. VERT STAB LIGHTS SWITCH
10. DOOR AND RAMP CONTROL PANEL
11. VERTICAL STABILIZER LIGHT

Service Compartment Lighting System Components (Sheet 3 of 3)

Exterior Lighting Subsystem

The exterior lighting subsystem provides light for landing, taxiing, wing inspection, takeoff, formation flying, A/R, and recognition purposes. Control switches for exterior lighting are located on the pilot's overhead panel, except A/R light controls are located at the flight engineer's station.

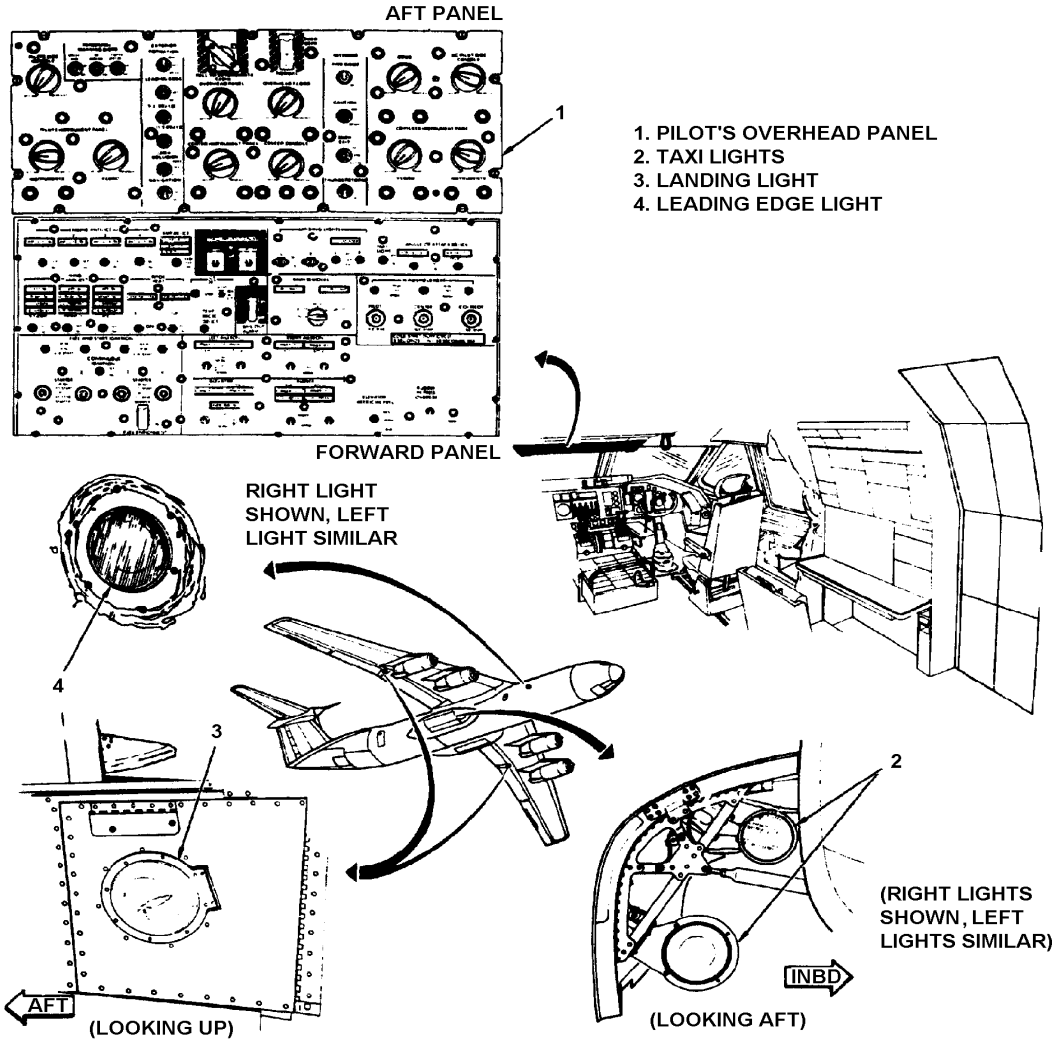

Exterior Lighting System Components (Sheet 1 of 3)

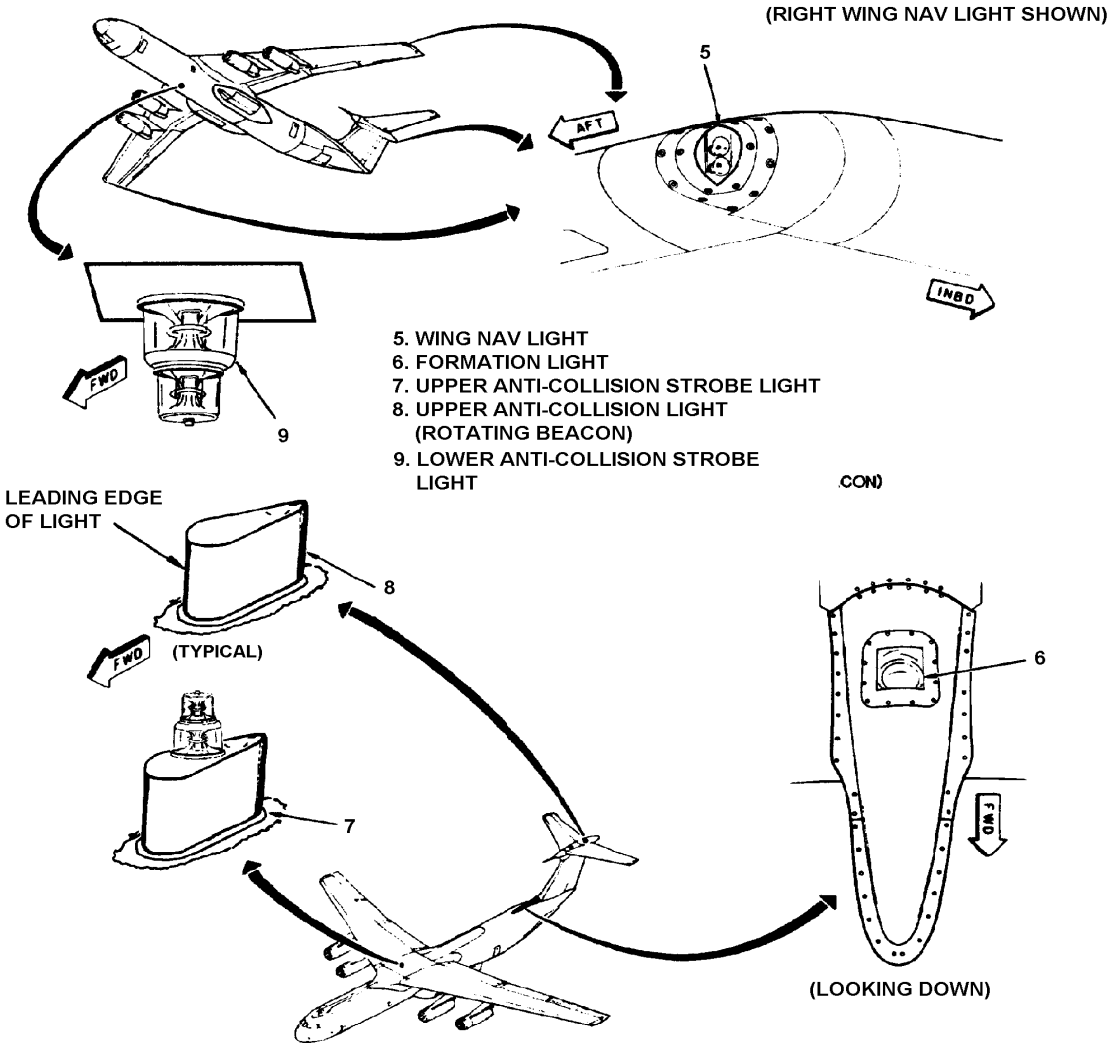

Exterior Lighting System Components (Sheet 2 of 3)

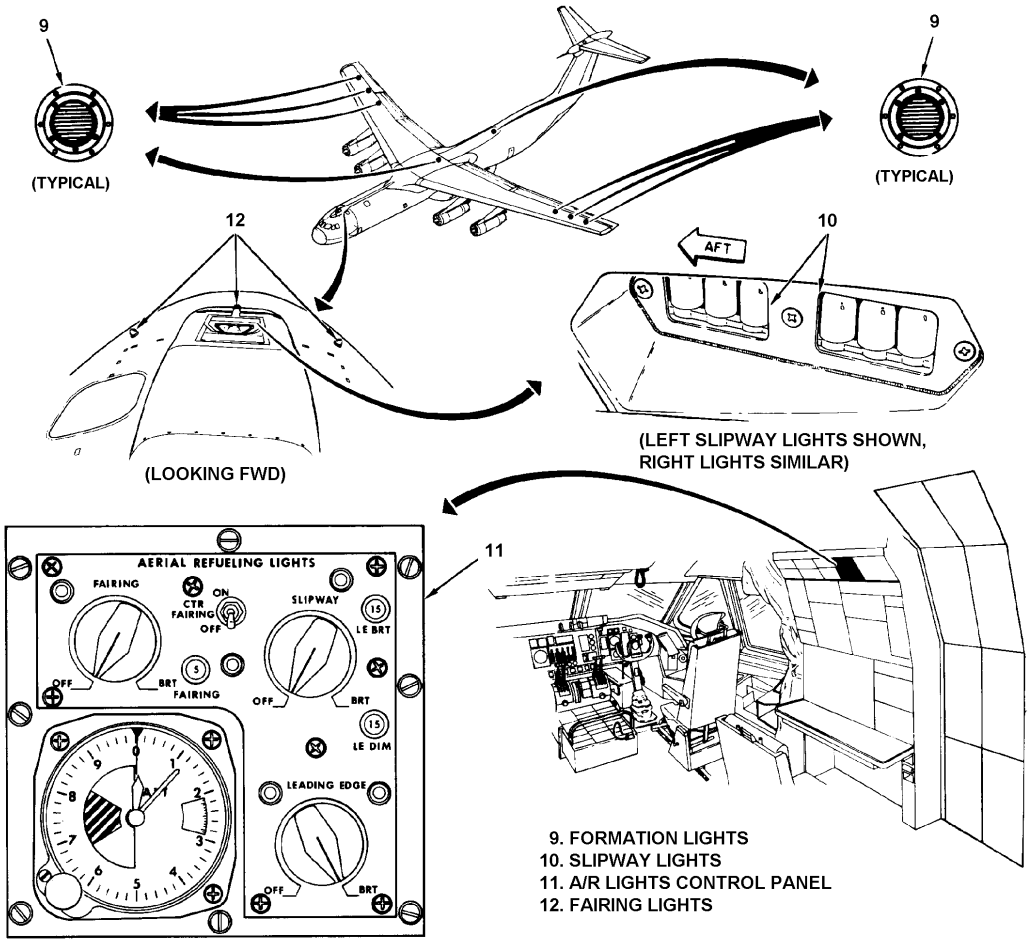

Exterior Lighting System Components (Sheet 3 of 3)

Emergency Lighting Subsystem

The emergency lighting subsystem consists of 11 emergency exit lights located at each emergency exit and at the crew and troop doors. Each emergency exit light contains batteries, relays, and a three-position control switch marked ARMED, OFF, and ON. For normal operation, each control switch is placed to ARMED.

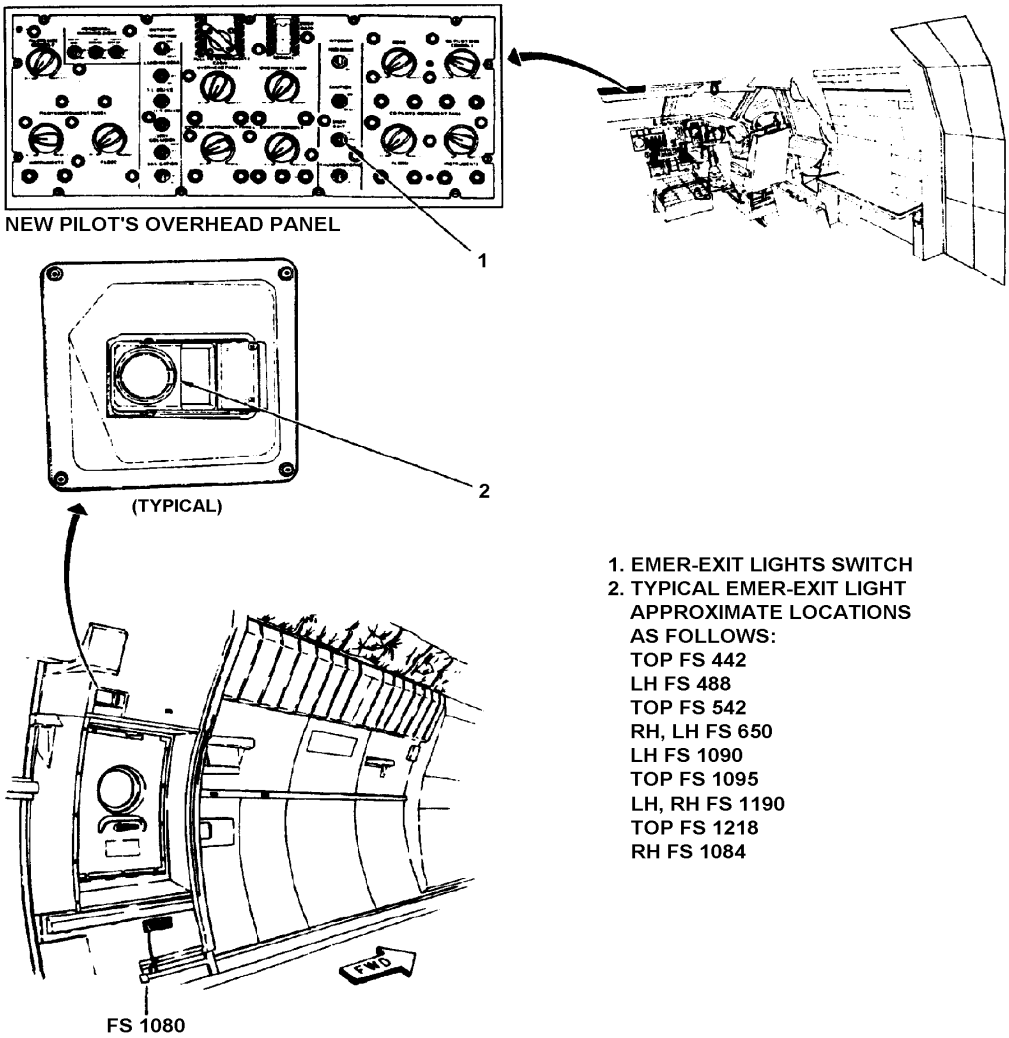

Emergency Lighting System Components

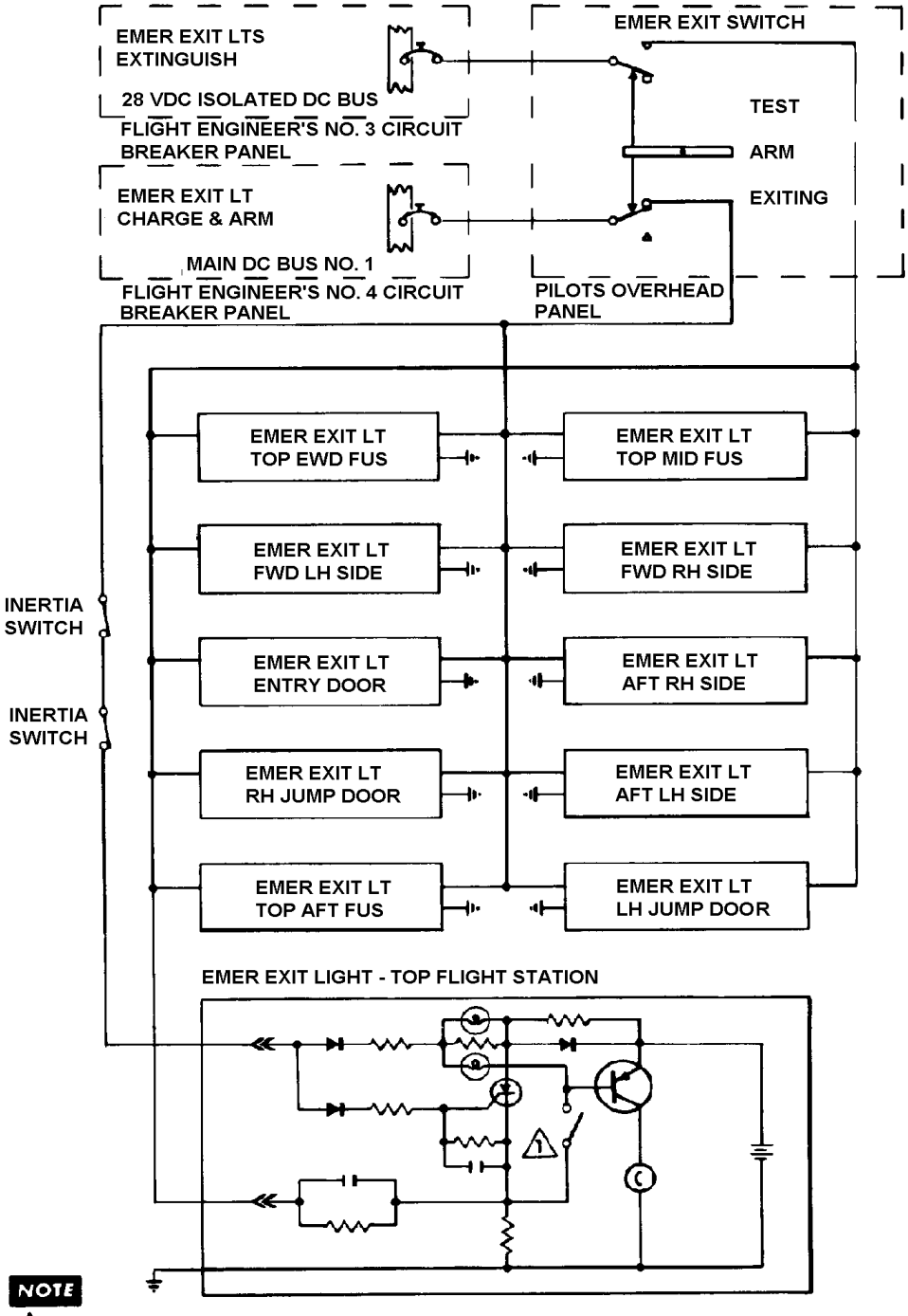

Emergency Lighting System Electrical Schematic Diagram

NOTES

NAVIGATION SYSTEM

General Description

The Navigation System of the C-141B airplane includes the following 17 subsystems:

- Pitot-Static System
- Central Air Data Computer (CADC)
- Total Air Temperature, Radar Altimeter
- Attitude and Heading Reference System (AHRS)
- Flight Director
- Glideslope (G/S)
- Marker Beacon
- Identification Friend or Foe (IFF)
- Weather Radar
- Ground Proximity Warning System (GPWS)
- Inertial Navigation System (INS)
- Automatic Direction Finder (ADF)
- Very High Frequency (VHF) Navigation
- Tactical Air Navigation (TACAN)
- Intraformation Positioning (SKE)
- Fuel Savings Advisory System (FSAS)
- Standby Attitude Indicator (Model-ARU-42/A-1)

These various systems collectively provide information and signals for flying the airplane to any place on earth with optimum fuel economy and in optimum time.

Pitot-Static System

The pitot-static system provides pitot and static air pressure for the pilot's and copilot's CADC and other functional units. The system routes the air pressure to indicators and equipment located inside the airplane. The air pressure is converted into airspeed and altitude information. The pitot-static system provides both types of air pressure to the standby airspeed indicator, CADC, and an altitude/airspeed transducer. Static pressure is supplied to the flight engineer's and navigator's altimeters and a cabin differential pressure transducer. Two pitot-static systems are installed on the airplane; one is utilized to provide data for use by the pilot, and the other provides data for use by the copilot. The external pressure is picked up by four pitot-static tubes, two on each side of the airplane at fuselage station 530, just aft of the crew's entrance door. The tube heads and masts are provided with heater elements for deicing the system.

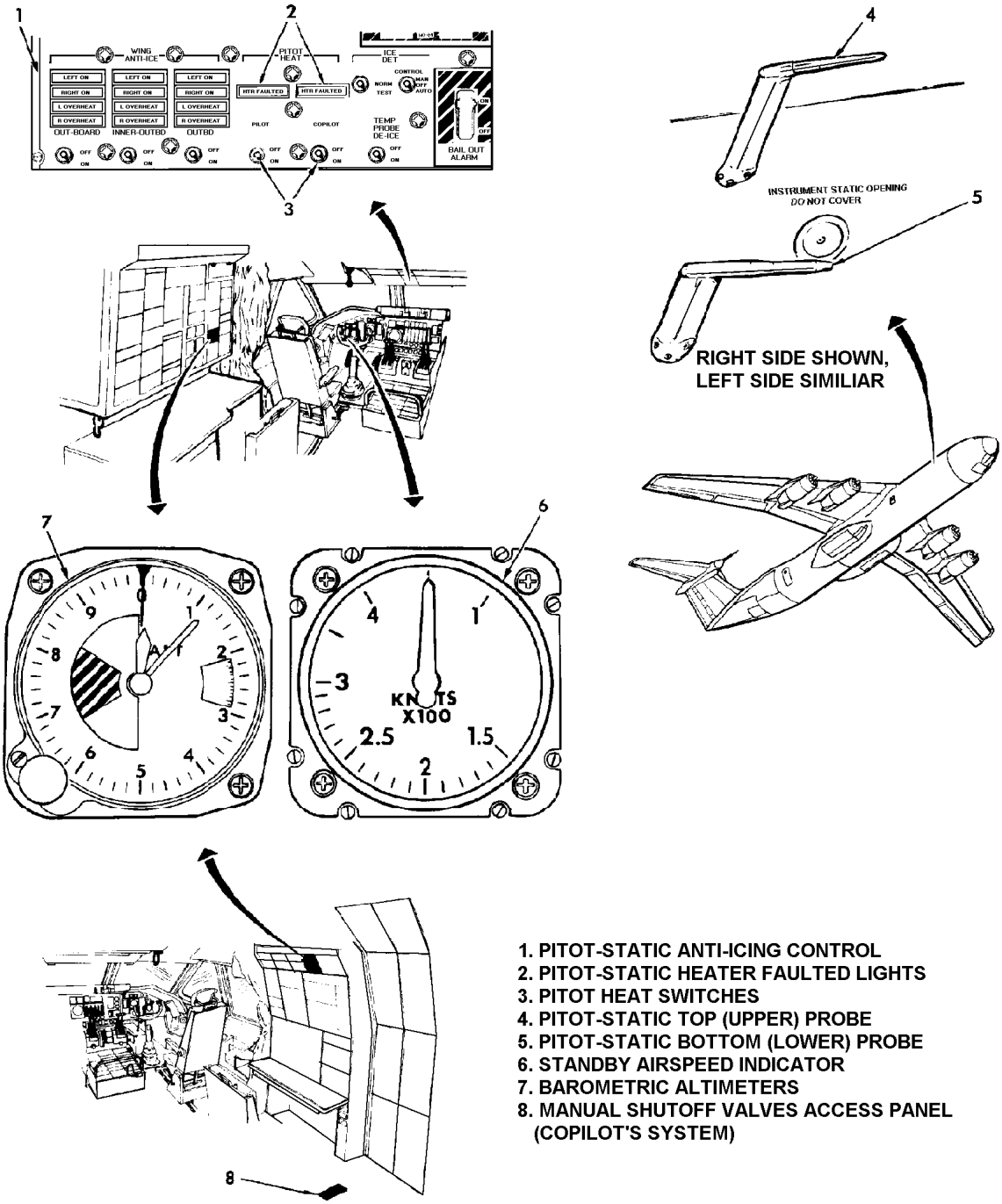

1. PITOT-STATIC ANTI-ICING CONTROL
2. PITOT-STATIC HEATER FAULTED LIGHTS
3. PITOT HEAT SWITCHES
4. PITOT-STATIC TOP (UPPER) PROBE
5. PITOT-STATIC BOTTOM (LOWER) PROBE
6. STANDBY AIRSPEED INDICATOR
7. BAROMETRIC ALTIMETERS
8. MANUAL SHUTOFF VALVES ACCESS PANEL (COPILOT'S SYSTEM)

Pitot-Static System Components (Sheet 1 of 2)

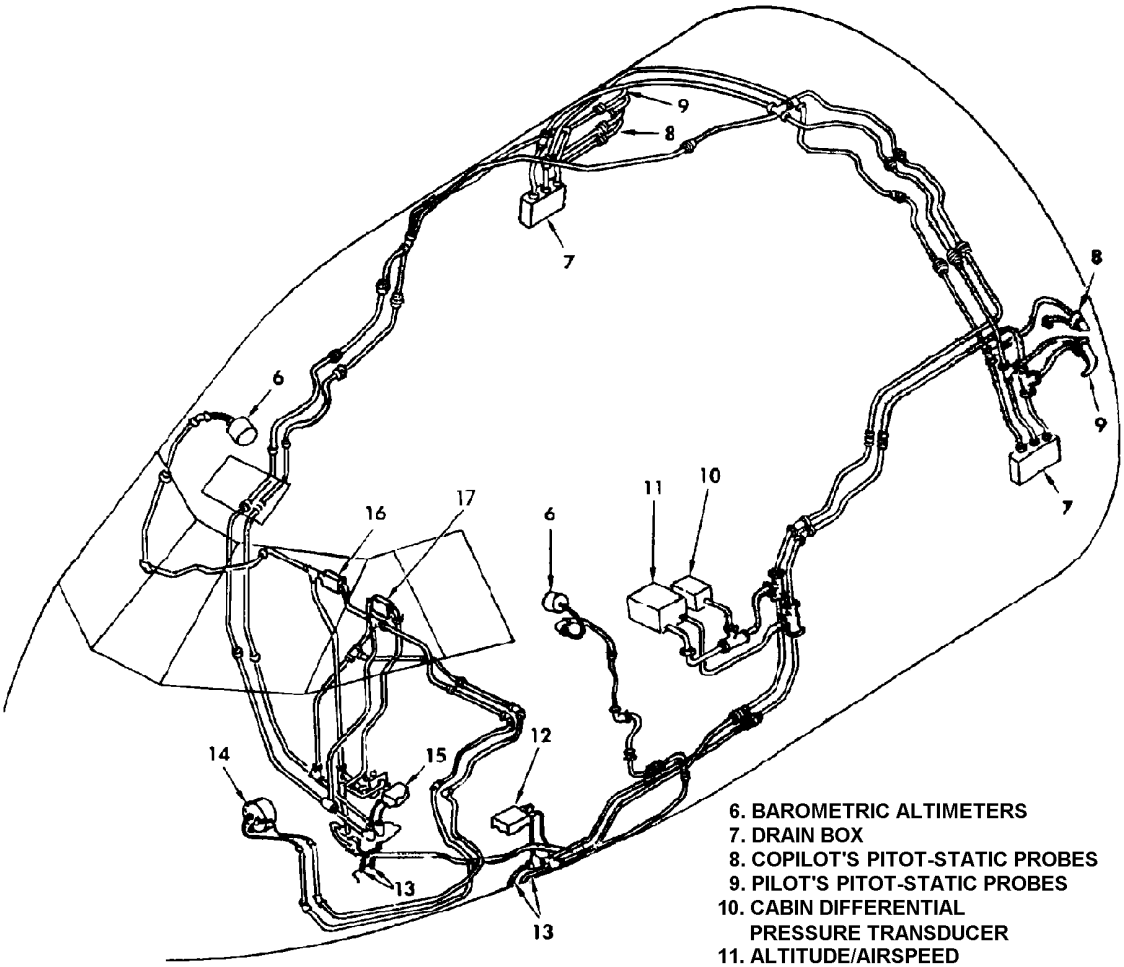

6. BAROMETRIC ALTIMETERS
7. DRAIN BOX
8. COPILOT'S PITOT-STATIC PROBES
9. PILOT'S PITOT-STATIC PROBES
10. CABIN DIFFERENTIAL PRESSURE TRANSDUCER
11. ALTITUDE/AIRSPEED TRANSDUCER
12. PILOT'S (NO. 1) CENTRAL AIR DATA COMPUTER
13. PITOT-STATIC SYSTEM DRAIN PROVISIONS (UNDER FLIGHT STATION)
14. STANDBY AIRSPEED INDICATOR
15. COPILOT'S (NO. 2) CENTRAL AIR DATA COMPUTER
16. STATIC MANUAL SHUTOFF VALVE (COPILOT'S SYSTEM)
17. PITOT MANUAL SHUTOFF VALVE (COPILOT'S SYSTEM)

Pitot-Static System Components (Sheet 2 of 2)

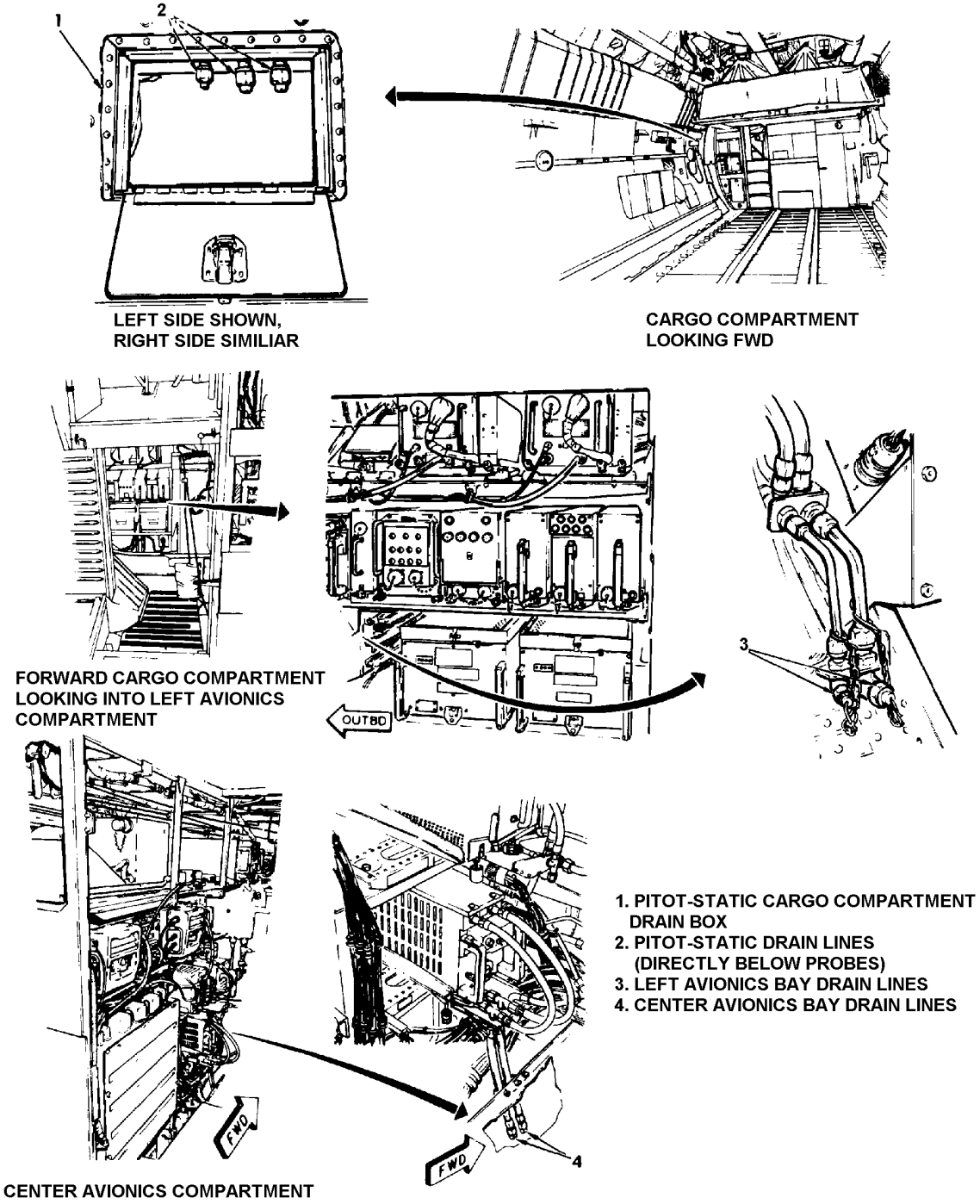

Pitot-Static Drain Locations

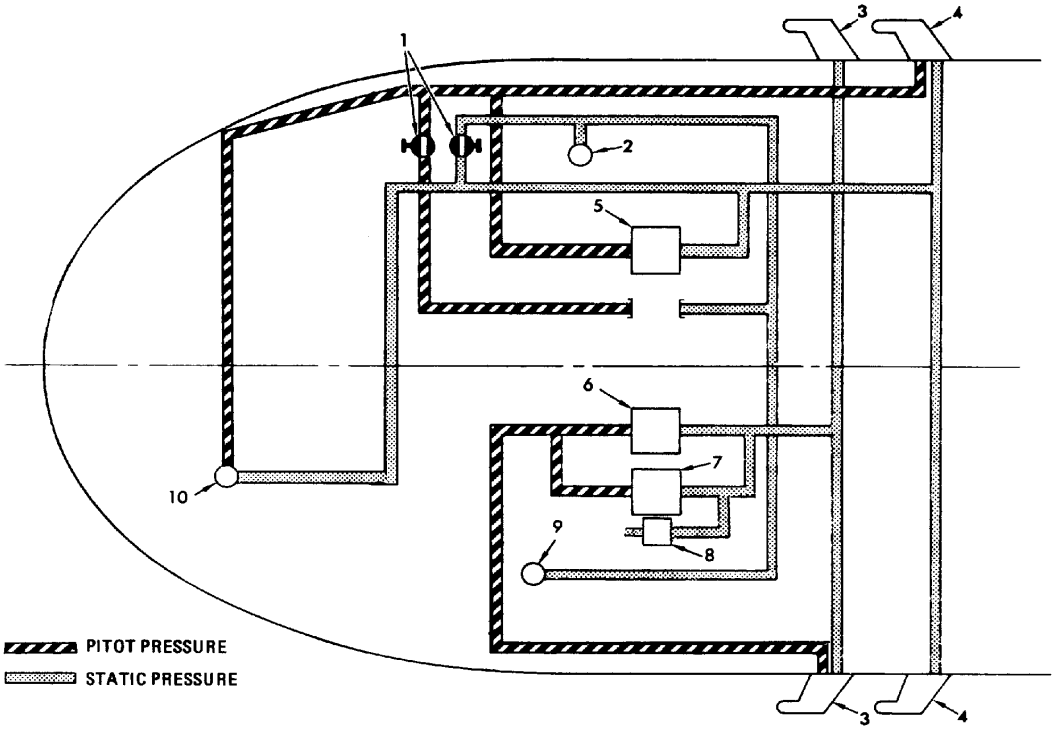

1. MANUAL SHUTOFF VALVES
2. FLIGHT ENGINEER'S ALTIMETER
3. PILOT'S PITOT-STATIC PROBES (UPPER RIGHT AND LOWER LEFT SIDES)
4. COPILOT'S PITOT-STATIC PROBES (UPPER LEFT AND LOWER RIGHT SIDES)
5. NO. 2 CENTRAL AIR DATA COMPUTER
6. NO. 1 CENTRAL AIR DATA COMPUTER
7. ALTITUDE/AIRSPEED TRANSDUCER
8. CABIN DIFFERENTIAL PRESSURE TRANSDUCER
9. NAVIGATOR'S ALTIMETER
10. STANDBY AIRSPEED INDICATOR

Pitot-Static System Schematic Diagram

Central Air Data Computer System (CADC)

The CADC supplies primary flight information to the pilot's and copilot's vertical scale flight instruments (VSFI) as well as control signals to other systems such as the automatic flight control system (AFCS). The pilot's and co-pilot's VFS1 indicate airplane speed in terms of both mach number and airspeed, barometric altitude, and the rate at which airplane altitude changes. The CADC input systems and output indicators make up the airplane's central air data system. Two complete and independent CADC systems are installed in the airplane. Each CADC receives pitot and static pressure inputs from the pitot-static system and the total air temperature system, which is sensed by a resistance probe. The CADC translates these input variables into electrical signals representing pressure altitude (Hp), vertical speed (Hpr), mach number (M), true airspeed (TAS), and indicated airspeed (IAS). The output signals are in the form of synchro signals or AC voltages. Some outputs are two-state in that a switch either opens or closes. The CADC also monitors flight conditions that depend upon airspeed and altitude (barometric pressure). The CADC sends signals based on this information to the elevator and rudder feel systems. The CADC also sends signals to the air conditioning systems.

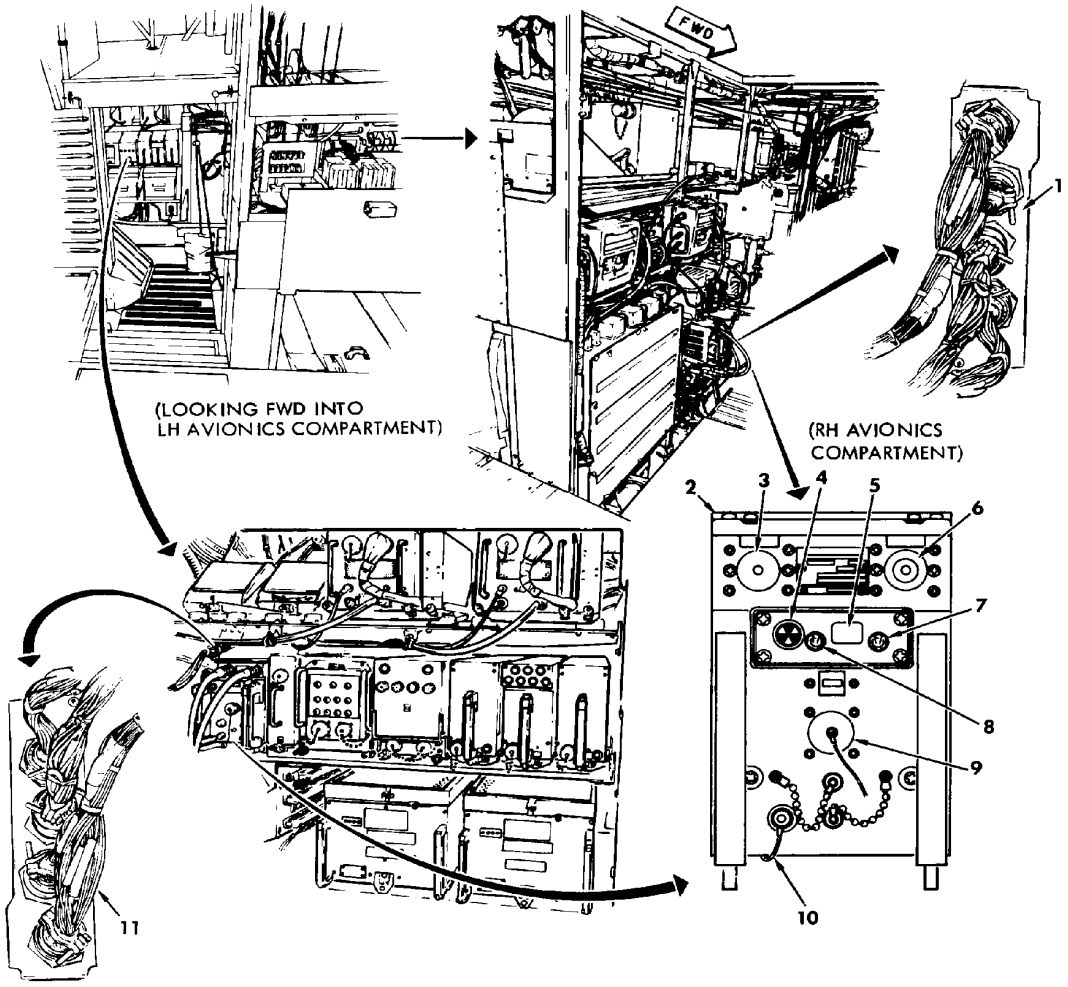

1. COPILOT'S CADC TEST DISCONNECT
2. CENTRAL AIR DATA COMPUTER
3. PITOT PRESSURE PORT
4. FAILURE ANNUNCIATOR
5. BUILT IN TEST DISPLAY
6. STATIC PRESSURE PORT
7. SELF TEST SELECT SWITCH
8. SELF TEST RUN SWITCH
9. AIRPLANE IDENTIFICATION PLUG
10. ELECTRICAL BONDING POINT
11. PILOT'S CADC TEST DISCONNECT

Central Air Data Computer (CADC) System Components (Sheet 1 of 4)

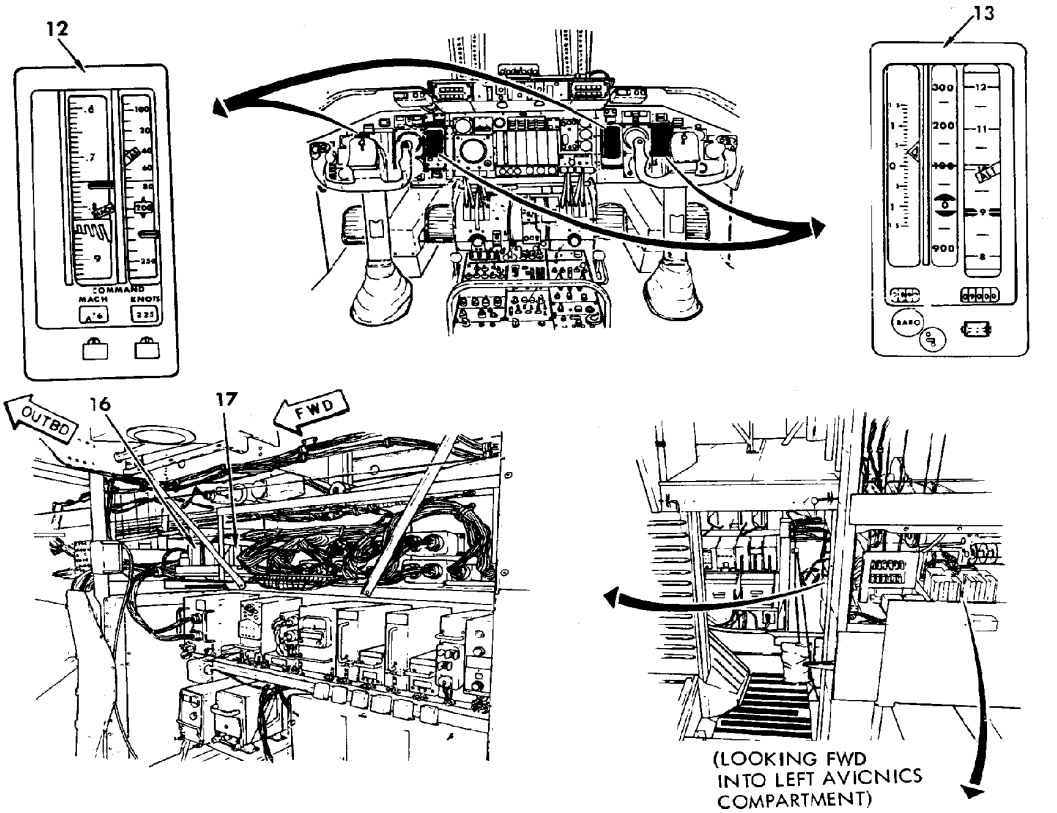

12. AIRSPEED -MACH INDICATOR
13. ALTITUDE-VERTICAL VELOCITY INDICATOR
14. COPILOT'S ALTITUDE-VERTICAL SPEED AMPLIFIER
15. COPILOT'S INDICATED AIRSPEED AMPLIFIER
16. PILOT'S INDICATED AIRSPEED AMPLIFIER
17. PILOT'S ALTITUDE-VERTICAL SPEED AMPLIFIER

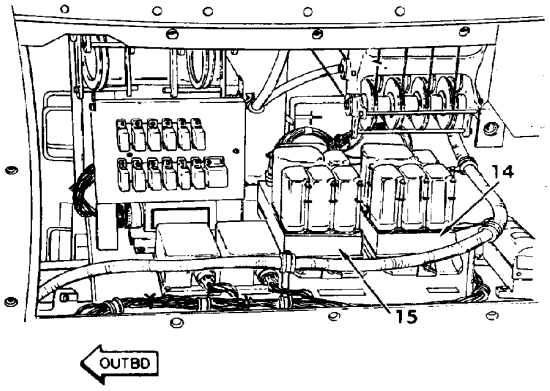

Central Air Data Computer (CADC) System Components (Sheet 2 of 4)

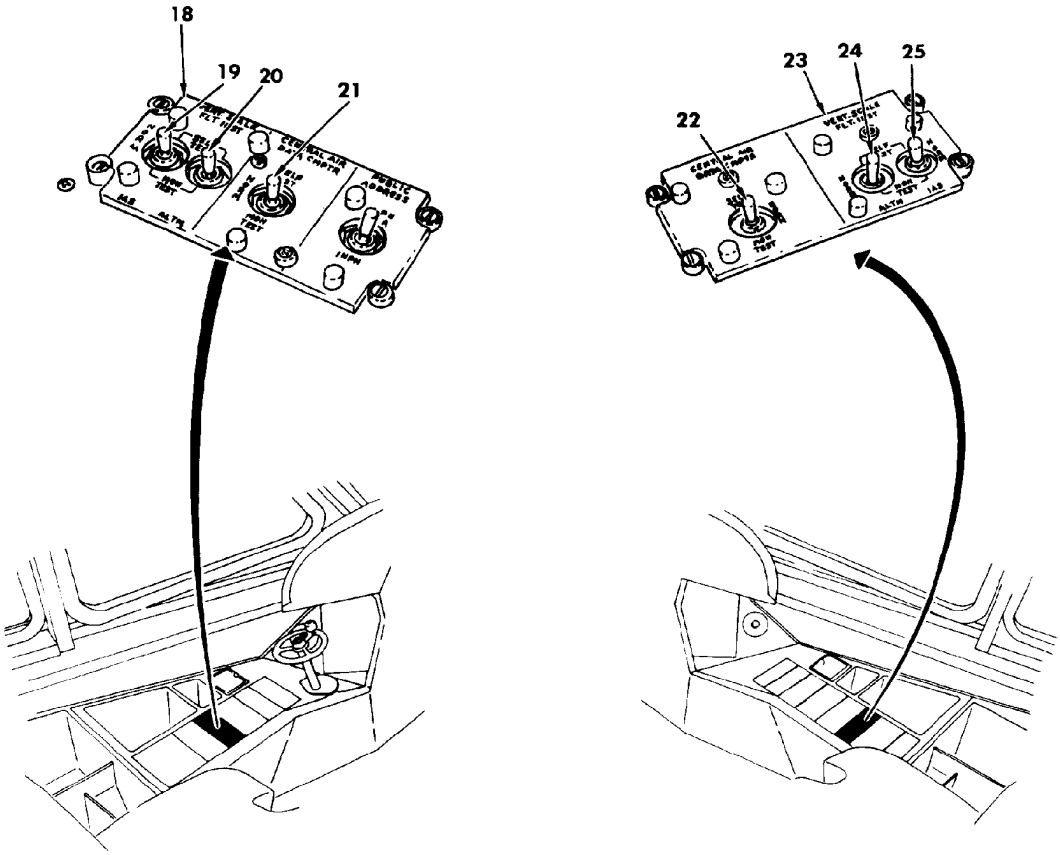

PILOT'S SIDE CONSOLE

COPILOT'S SIDE CONSOLE

18. PILOT'S VERTICAL SCALE INSTRUMENT SWITCHING ASSEMBLY
19. PILOT'S IAS TEST SWITCH
20. PILOT'S ALTM TEST SWITCH
21. PILOT'S CADC TEST SWITCH
22. COPILOT'S CADC TEST SWITCH
23. COPILOT'S VERTICAL SCALE INSTRUMENT SWITCHING ASSEMBLY
24. COPILOT'S ALTM TEST SWITCH
25. COPILOT'S IAS TEST SWITCH

Central Air Data Computer (CADC) System Components (Sheet 3 of 4)

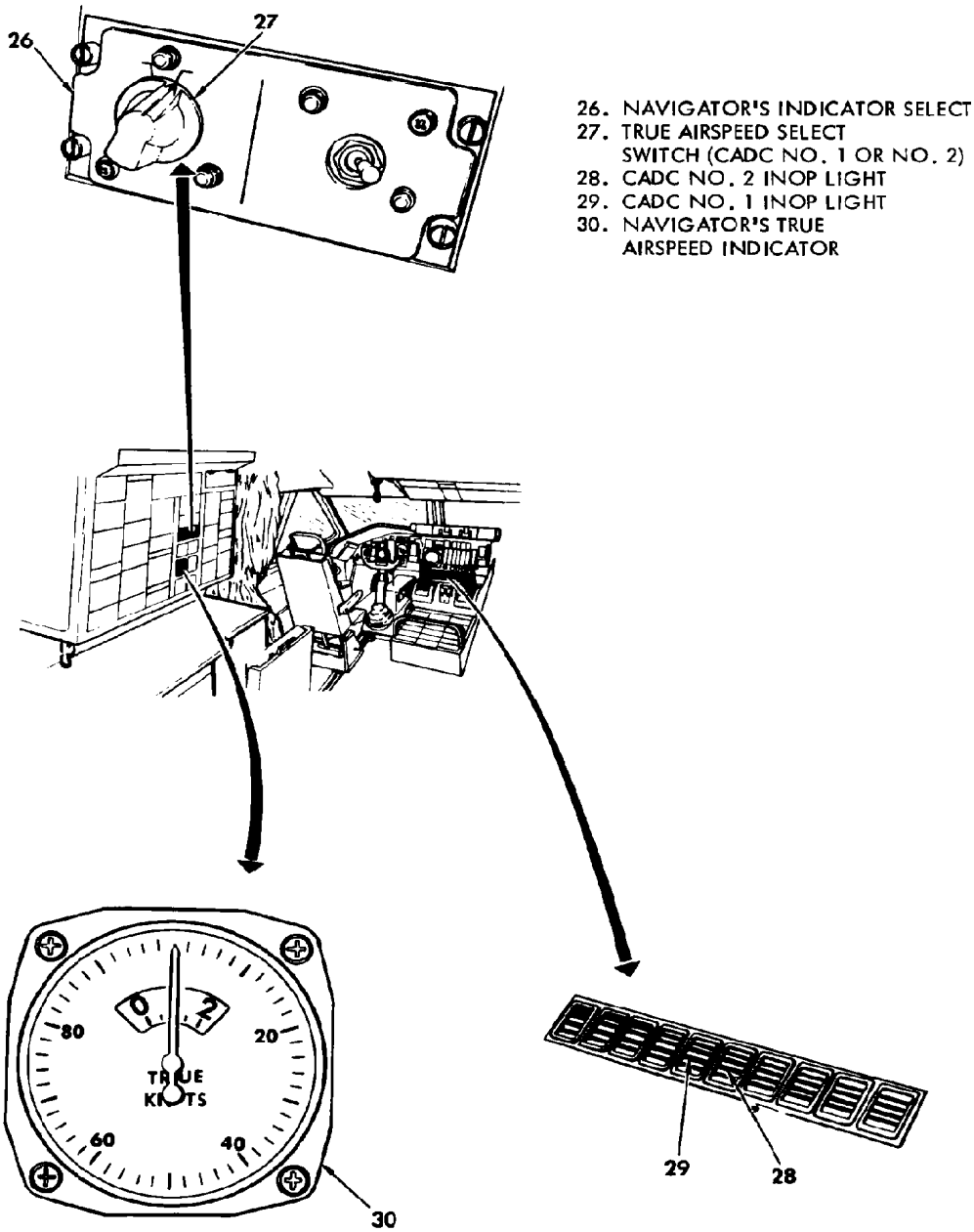

Central Air Data Computer (CADC) System Components (Sheet 4 of 4)

Total Air Temperature (TAT) System

The TAT system provides temperature values to the pilot and flight engineer. Temperature values depend on sensing elements within probes on the outside of the airplane. There are two TAT indicators - one on the copilot's instrument panel and one on the flight engineer's instrument panel. TAT signals are also provided to CADC systems, and to the FSAS. The TAT system is served by resistive elements in two probes, one just forward of the crew entrance door on the left side of the airplane. The other probe is in a similar position on the right side. Each probe has a resistive heating element for anti-icing.

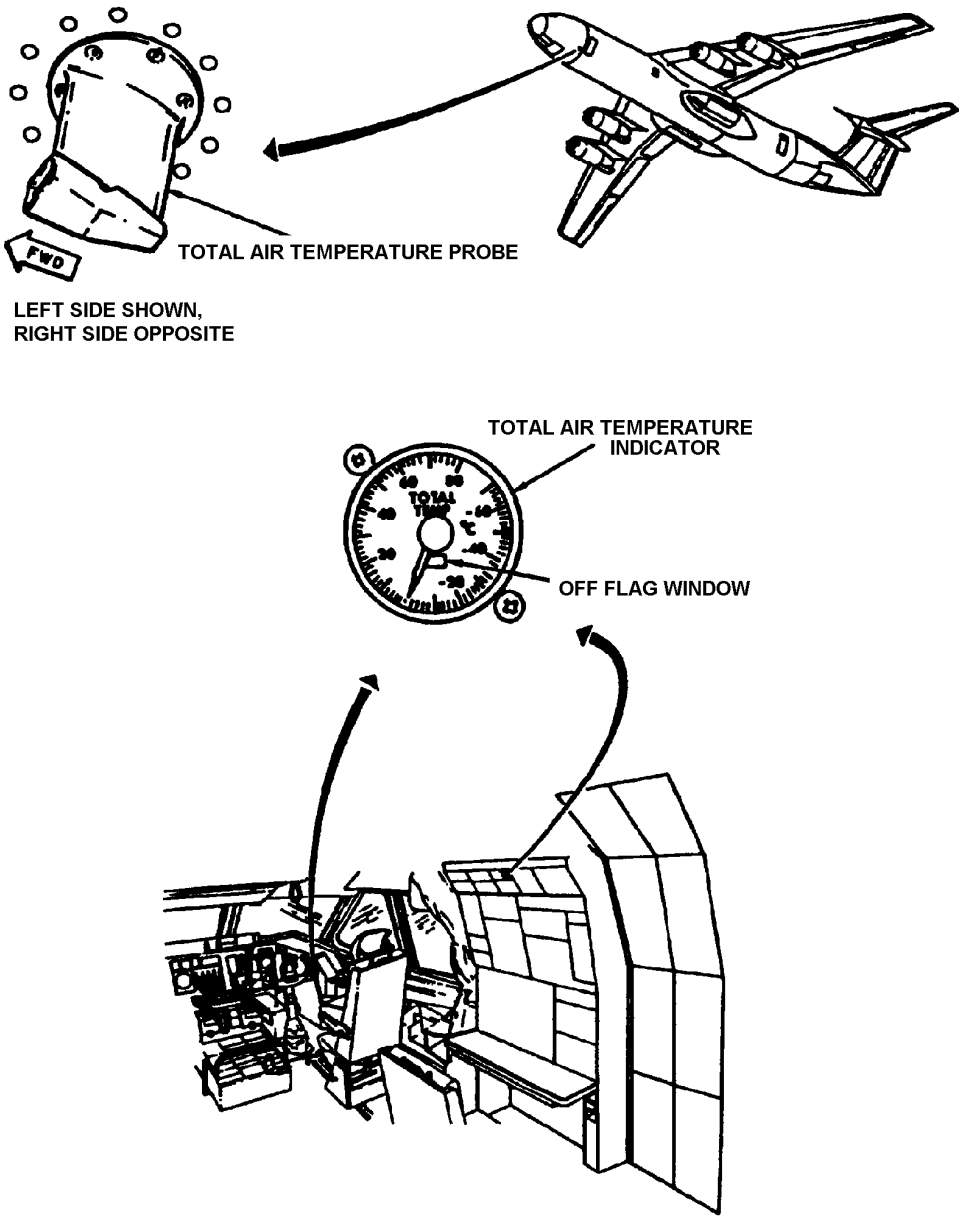

Total Air Temperature (TAT) System Components

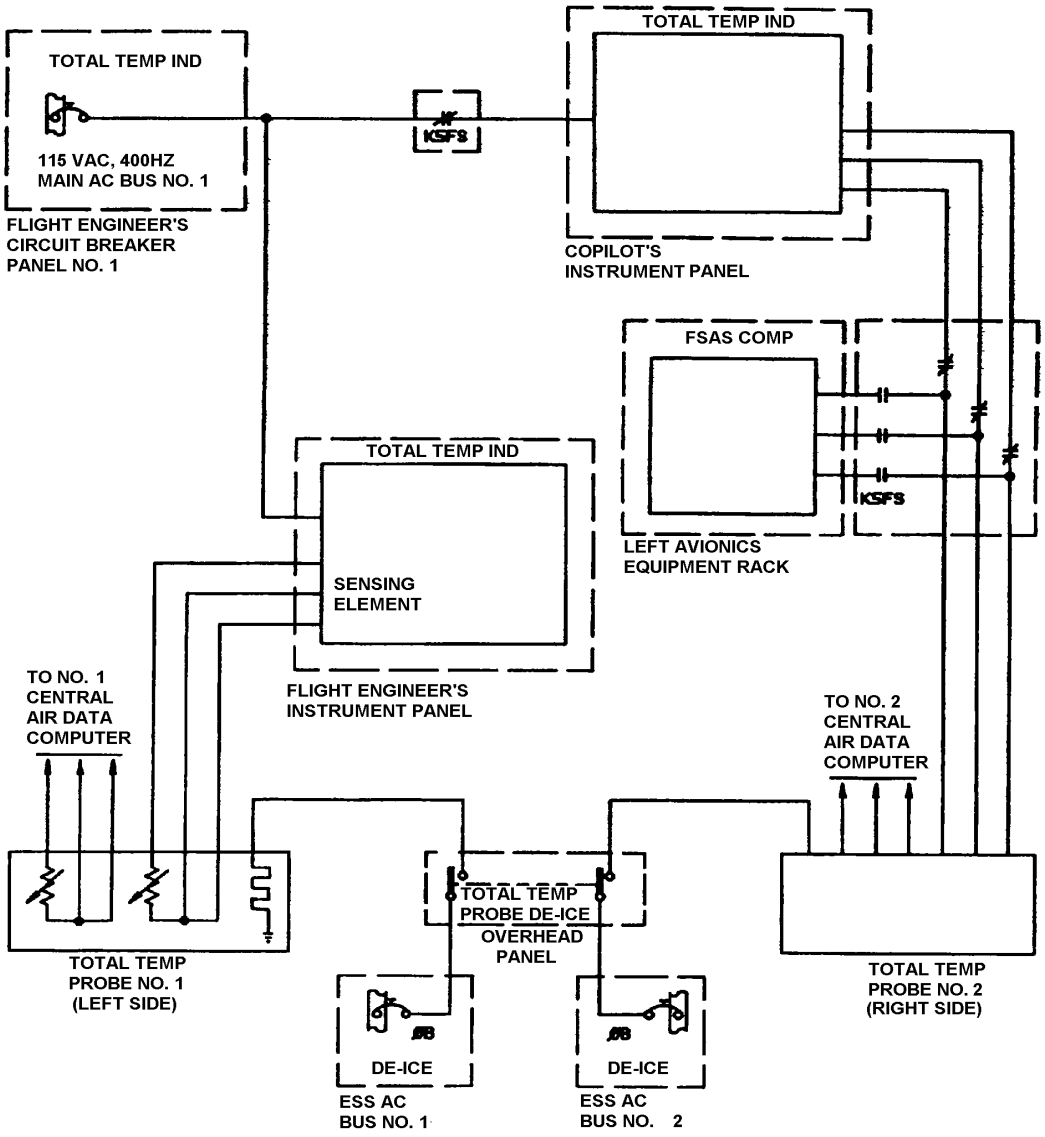

Total Air Temperature (TAT) System Schematic Diagram

Radar Altimeter System

The combined altitude radar altimeter (CARA) system AN/APN-232(V) provides accurate indication of the airplane's altitude above the ground surface. The altimeter is an altitude tracking and indicating radar. Altitude is measured by a receiver-transmitter and is visually displayed by an indicator on the pilot's center instrument panel. The indicator displays altitudes between zero and 50,000 feet. The system is set to show zero feet at touchdown. Radar ranging methods precisely measure altitude and the airplane's true height is continuously sensed above the ground within the range of 0 to 50,000 feet. Radar altimeter operations are not affected by atmospheric or barometric conditions. Altitude data signals are sent to the GPWS and the all weather landing system (AWLS).

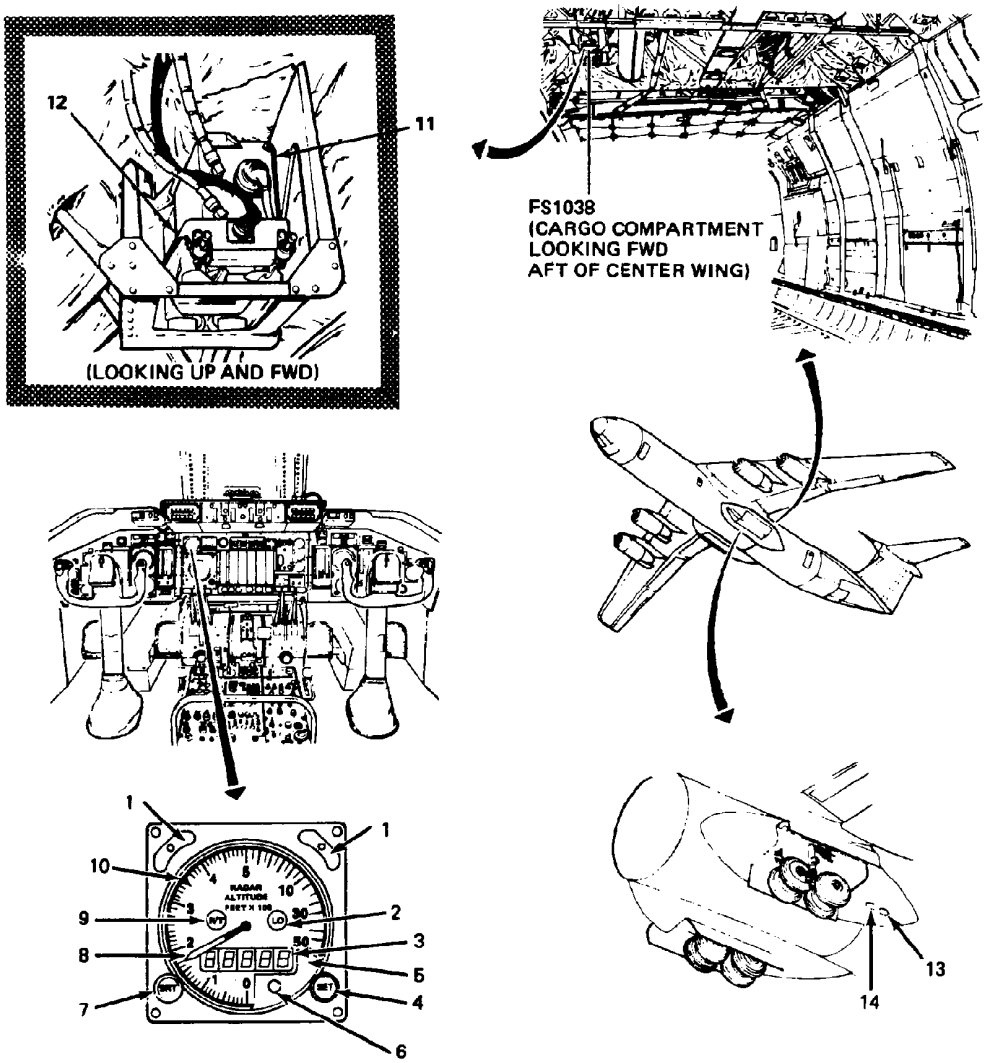

1. FRONT REPLACEABLE LAMP ASSEMBLY
2. LOW ALTITUDE WARNING INDICATOR
3. DIGITAL ALTITUDE DISPLAY
4. OFF/ON/VALI/PTT
5. ANALOG POINTER MASK
6. AMBIENT LIGHT SENSOR
7. DIGITAL READOUT DIMMER CONTROL
8. ANALOG ALTITUDE POINTER
9. RCVR/XTMR STATUS INDICATOR
10. VALI SETTING INDICATOR
11. RECEIVER-TRANSMITTER
12. SIGNAL DATA CONVERTER
13. RECEIVING ANTENNA
14. TRANSMITTING ANTENNA

Radar Altimeter System Components

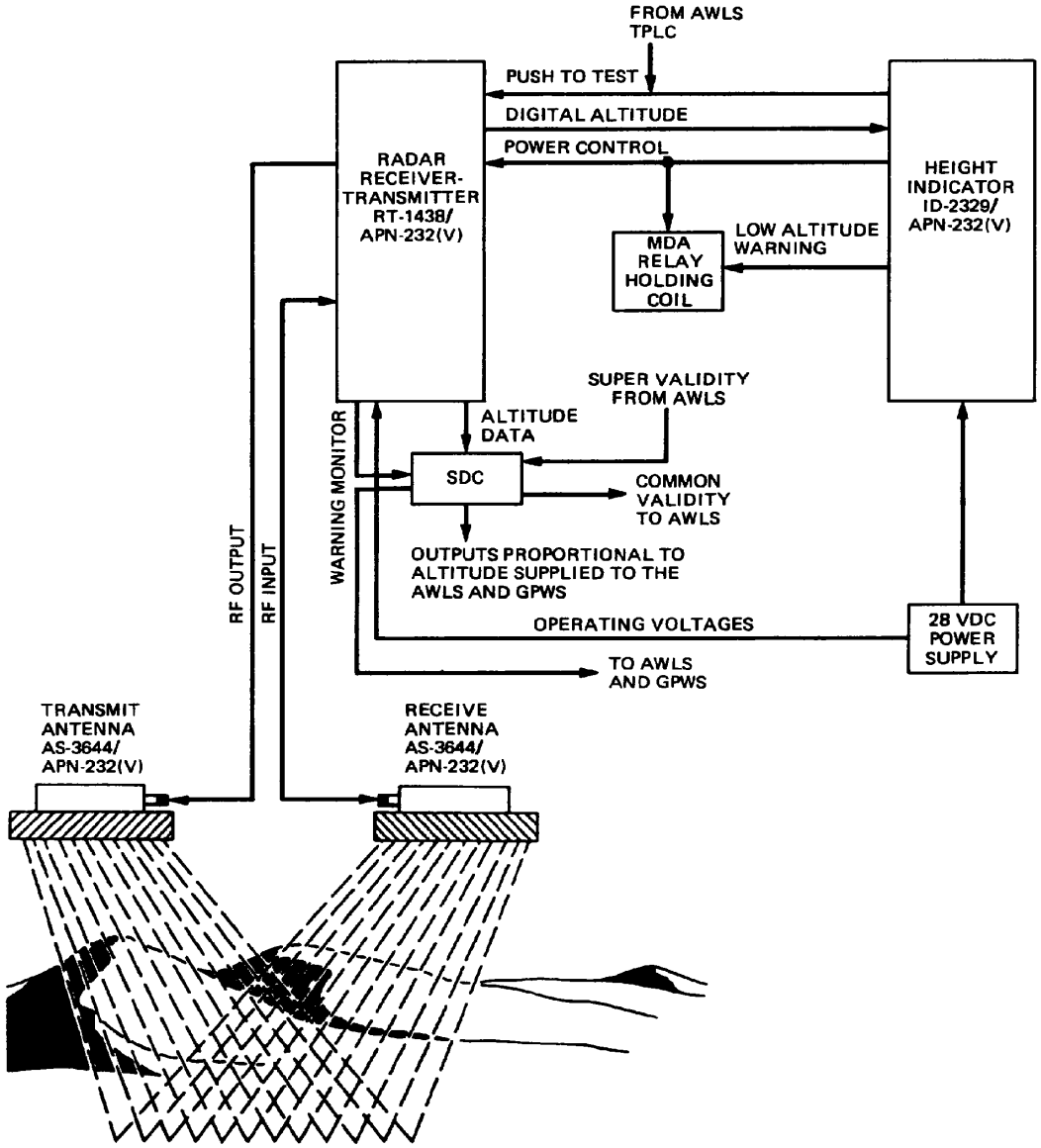

Radar Altimeter Functional Output Block Diagram

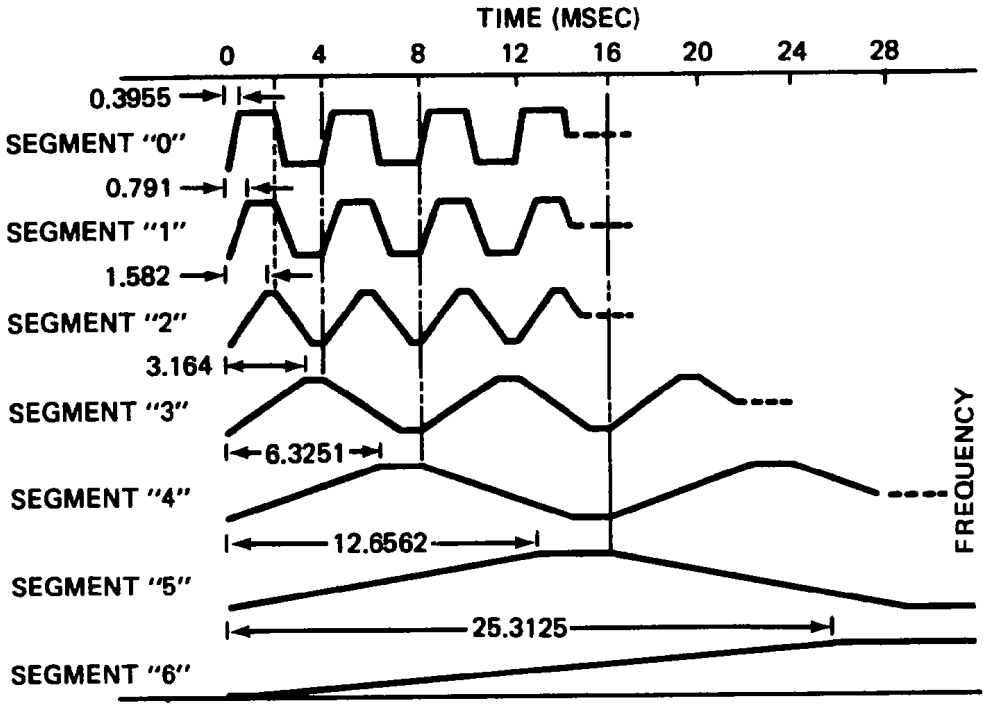

Radar Altimeter Segment RF Sweep Timing

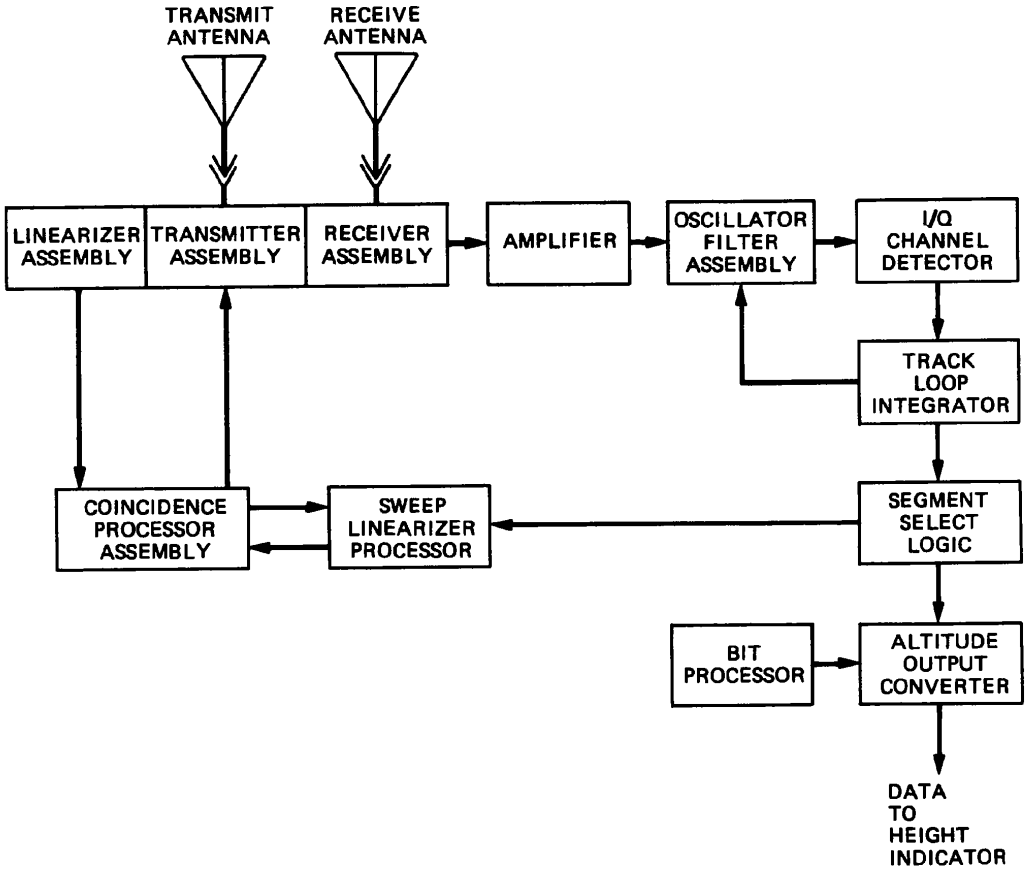

Receiver-Transmitter Functional Block Diagram

Attitude and Heading Reference System (AHRS)

The AHRS provides a backup source of magnetic heading (compass) and attitude signals to other airplane systems. Magnetic heading signal is used for airplane navigation. Attitude information is in the form of pitch and roll signals. The AHRS is the sole source of magnetic heading for the autopilot and flight recorder systems, and is the third source of magnetic heading to the pilot's and copilot's horizontal situation indicator (HSI), pilot's and navigator's bearing direction heading indicator (BDHI), tactical air navigation (TACAN), variable omni-range (VOR), and all weather landing system (AWLS). INS-1 and INS-2 are the prime two sources of magnetic heading. The AHRS processes signals from a detector that senses the earth's magnetic field. The AHRS also has a displacement gyroscope, all attitude platform, which provides pitch, roll, and azimuth signals. When selected, the system can provide roll and pitch signals to the pilot's and copilot's ADI, the TPLC, and the weather radar system. The AHRS also provides a turn rate signal that is used by the pilot's ADI rate of turn indicator. A validity discrete (on/off signal) which powers the pilot's RATE OFF (rate-of-turn power off) indicator is also provided. Also, outputs are provided by AHRS to drive the power-off flag in the HSI, the attitude warning flag in the ADI, and the power validity flag in the BDHI. The AHRS flag outputs are connected only to those indicators selected to receive AHRS information. The AHRS provides gyro-stabilized (slaved) magnetic heading in areas where magnetic meridians are strong and undistorted. The system thus has the long term accuracy of a magnetic sensor and the short term response of a gyroscope. AHRS also provides unslaved directional gyro (DG) heading in areas where magnetic meridians are weak and or distorted (primarily polar regions). The AHRS can also provide unstabilized magnetic heading, but this is an abnormal or emergency mode of operation. The system monitors its own operation and provides a warning discrete if output information is unreliable.

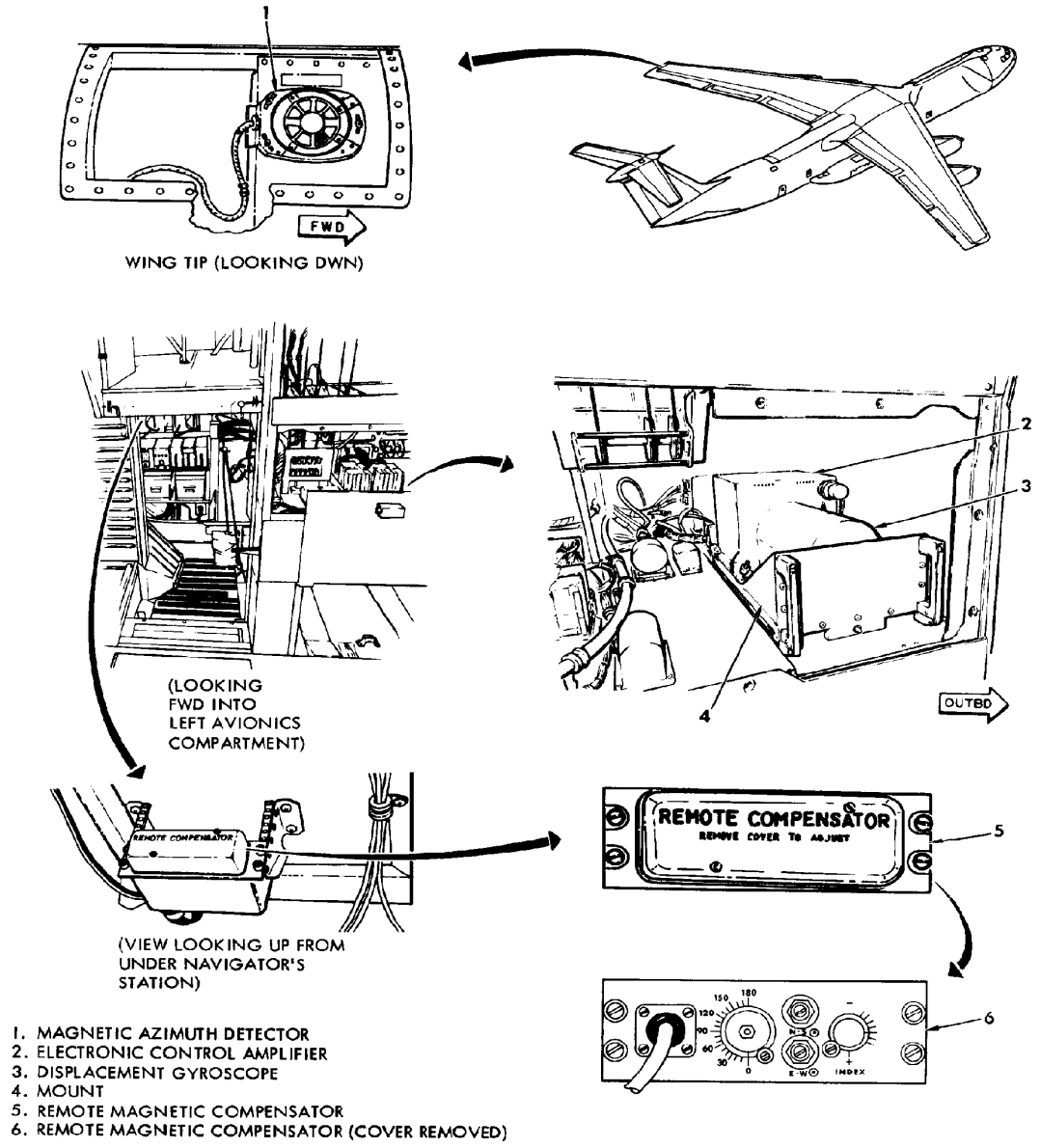

Attitude and Heading Reference System (AHRS) Components (Sheet 1 of 2)

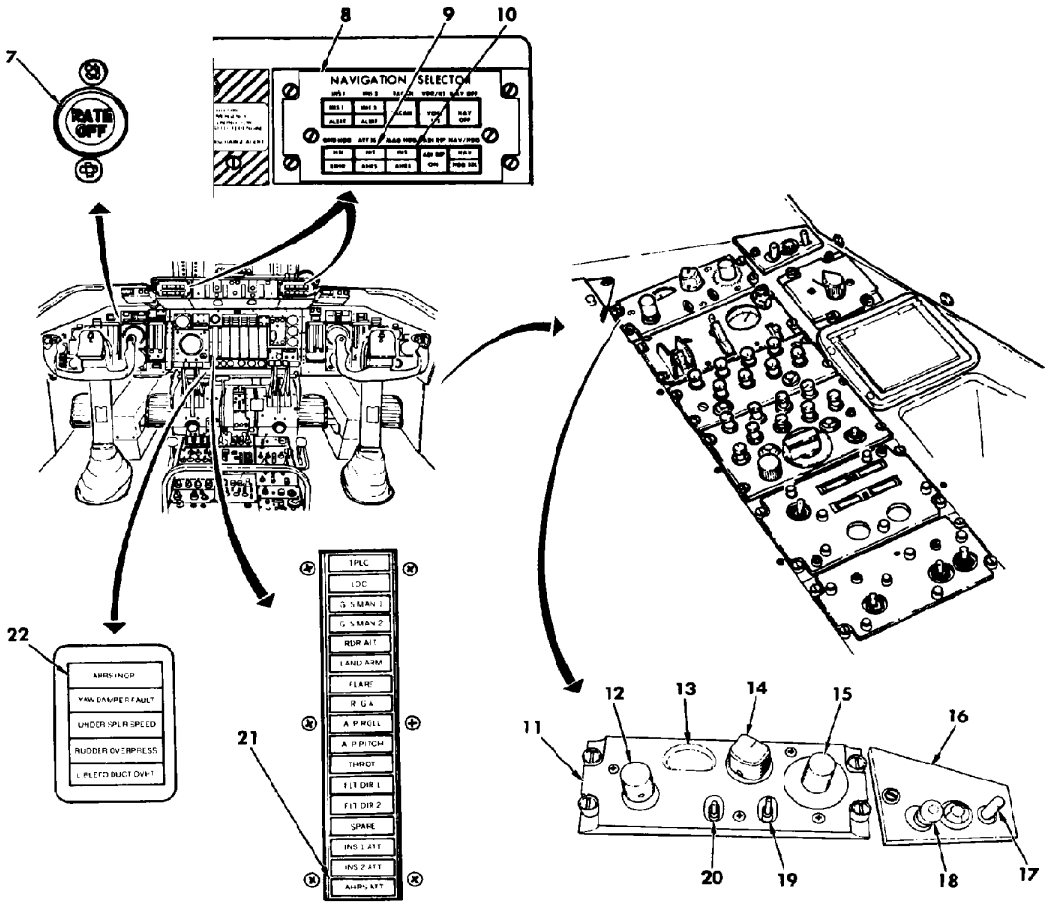

7. PILOT'S RATE OFF INDICATOR
8. NAVIGATION SELECTOR PANEL
9. ATTITUDE SELECT SWITCH
10. MAGNETIC HEADING SELECT SWITCH
11. COMPASS SYSTEM CONTROLLER
12. -HDG+/PUSH TO SYNC CONTROL
13. SYN IND
14. MODE SWITCH
15. LATITUDE CONTROL
16. AHRS POWER CONTROL PANEL
17. FAST ERECT-NORM SWITCH
18. POWER ON-OFF SWITCH
19. N-S HEMISPHERE SWITCH
20. MAG VAR SWITCH
21. AHRS ATT LIGHT
22. AHRS INOP LIGHT

Attitude and Heading Reference System (AHRS) Components (Sheet 2 of 2)

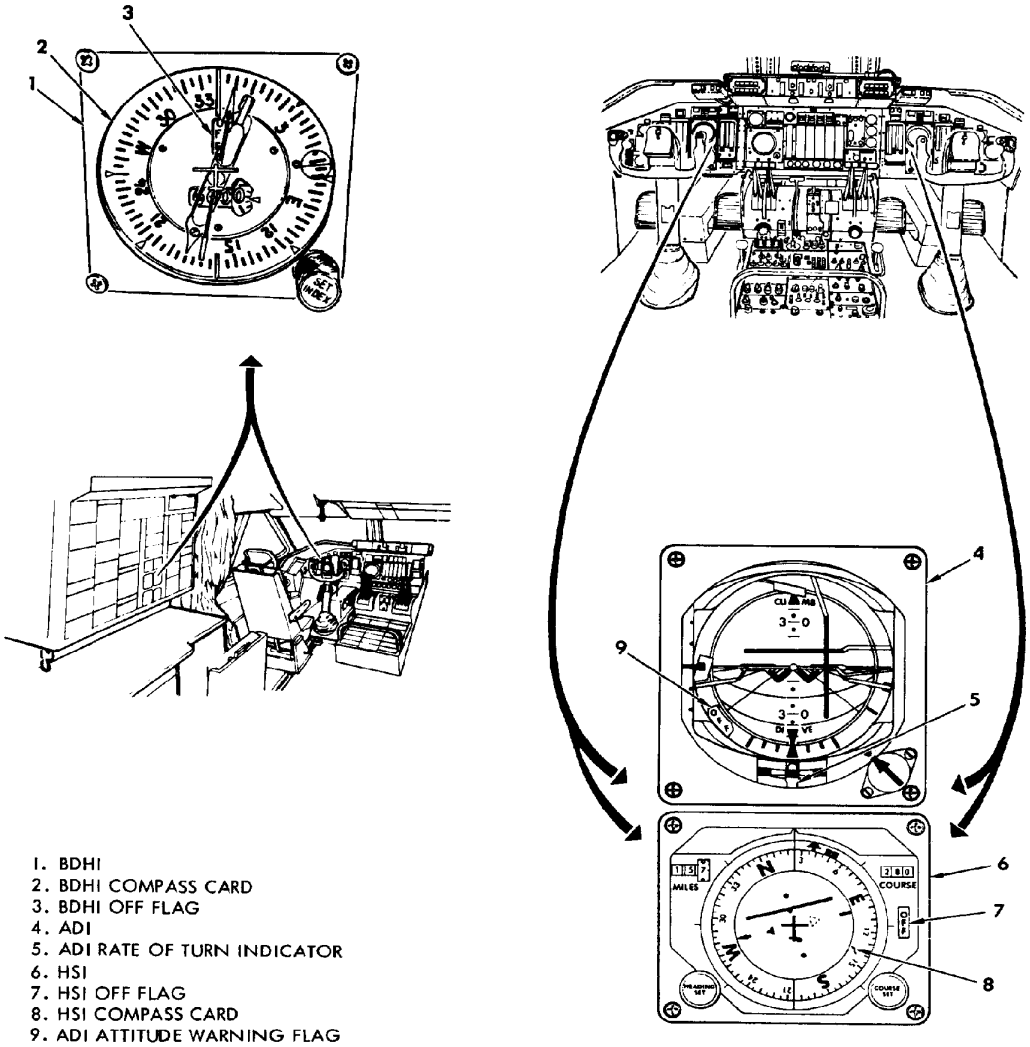

Attitude and Heading Reference System (AHRS) Related Indicators

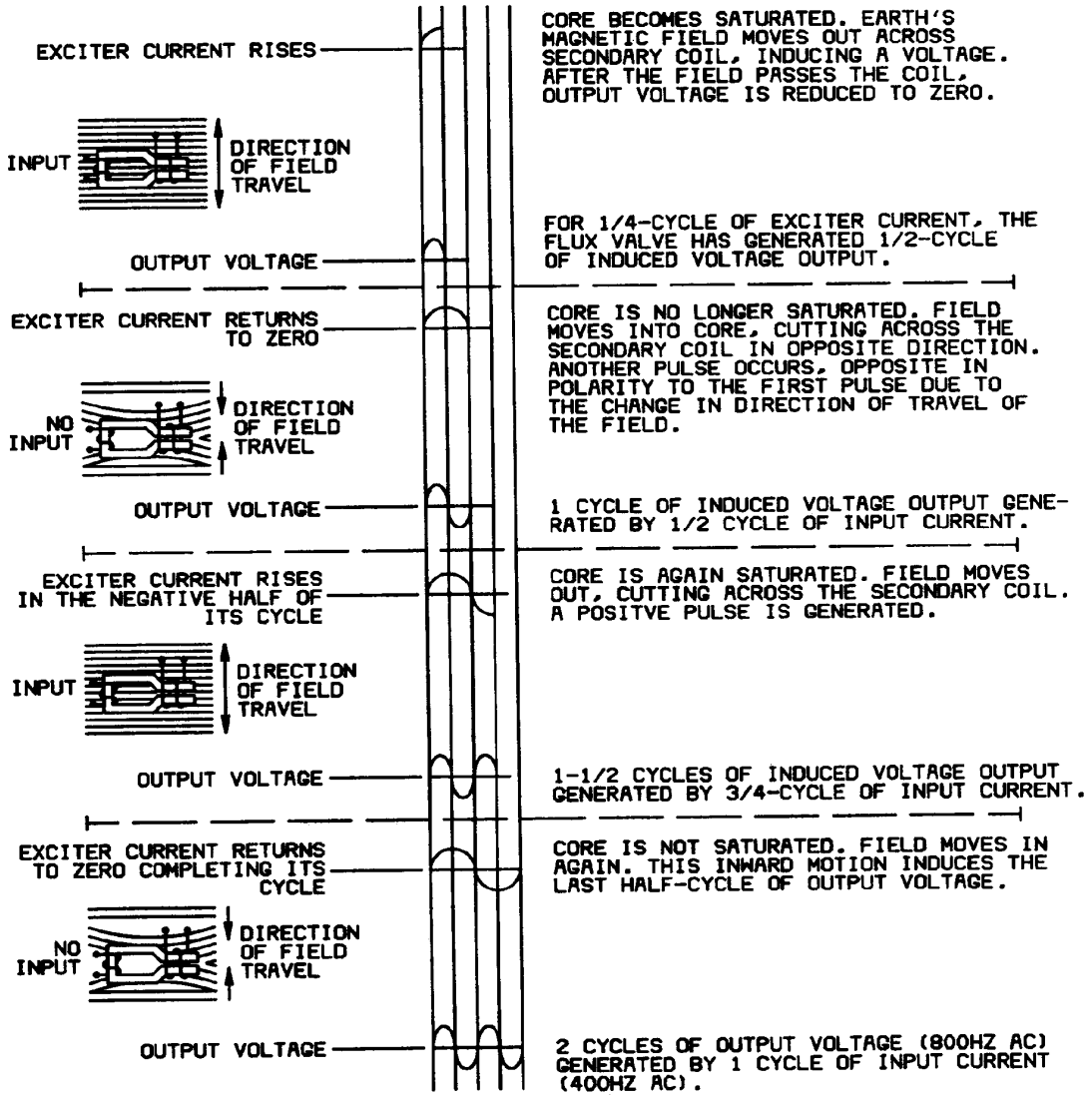

Basic Flux Valve Operation

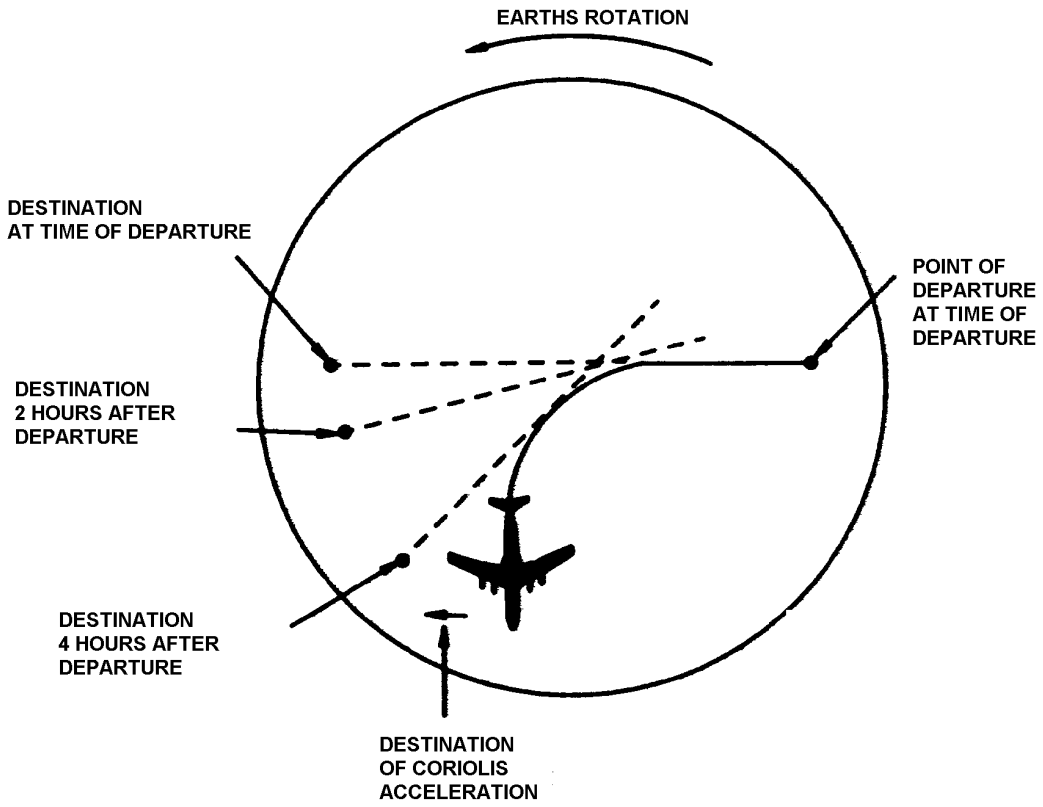

Coriolis Error

Flight Director System

The flight director system provides the pilot and copilot with a pictorial display of data required to perform instrument flight maneuvers. Two completely separate and independent flight director systems exist on the airplane. The No. 1 system is for the pilot and the No. 2 system is for the copilot. The pilot and copilot can independently select desired navigation aids. The flight director systems operate in the following modes to provide navigation information to the pilot and copilot: NAV OFF, MANUAL HEADING, VOR/ILS, TACAN, INS, FLARE, AUTOPILOT, GO-AROUND, and FSAS. During operation using navigation data from the dual radio navigation system (VOR, TACAN, ILS), the pilot's flight director system receives information from the No. 1 systems, and the copilot's flight director system receives information from the No. 2 systems. During operation using data from the INS, the pilot's and copilot's flight director systems may share data from a single INS or utilize them individually. The flight director systems present navigation data by means of the HSI and ADI located on the pilot's and copilot's instrument panels. The HSI display a pictorial view of the navigation situation as viewed from above.

The HSI present the pilot and copilot with heading and heading error (magnetic for radio; true for INS), distance course deviation and course error (for radio) or cross track deviation and desired track (for INS), bearing to station (for radio) or ground track (for INS), to-from indications of bearing arrow pointing to (toward) station or from station, and signal and power failure warning flags.

The ADI display a pictorial view of the navigation situation as viewed from behind. The ADI present the pilot and copilot with glideslope deviation, rate-of-turn, turn coordination (slip and skid), roll attitude with respect to horizon, pitch attitude, lateral computed guidance, vertical computed guidance, altitude, and signal and power failure warning.

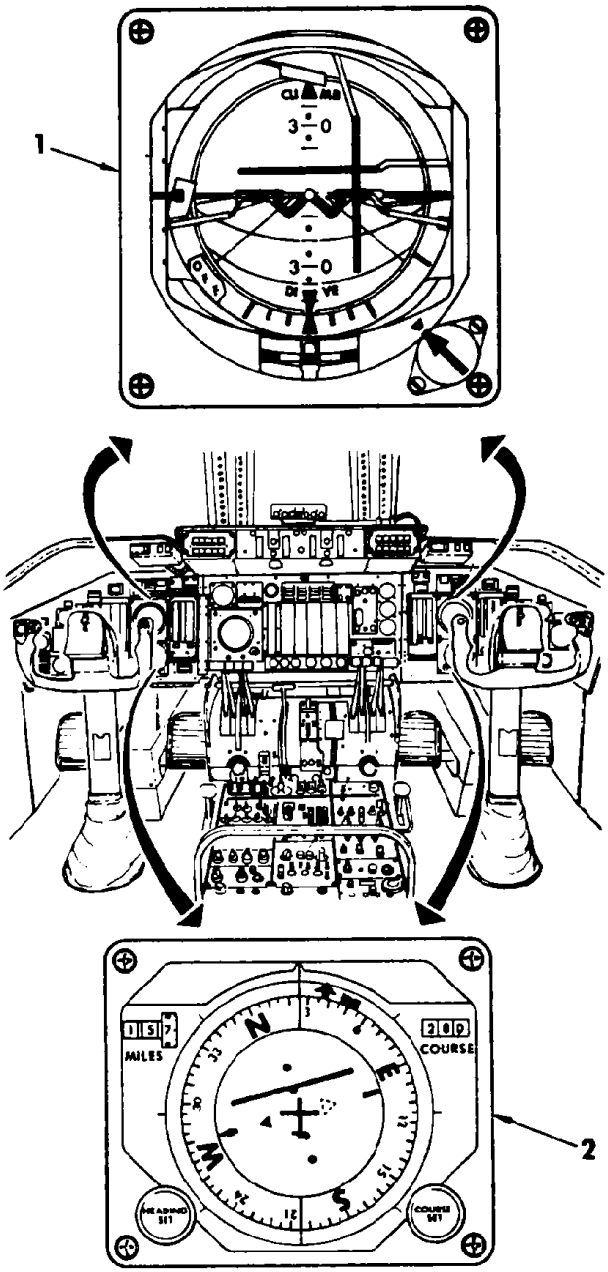

1. ATTITUDE DIRECTION INDICATOR
2. HORIZONTAL SITUATION INDICATOR

Flight Director System Components (Sheet 1 of 3)

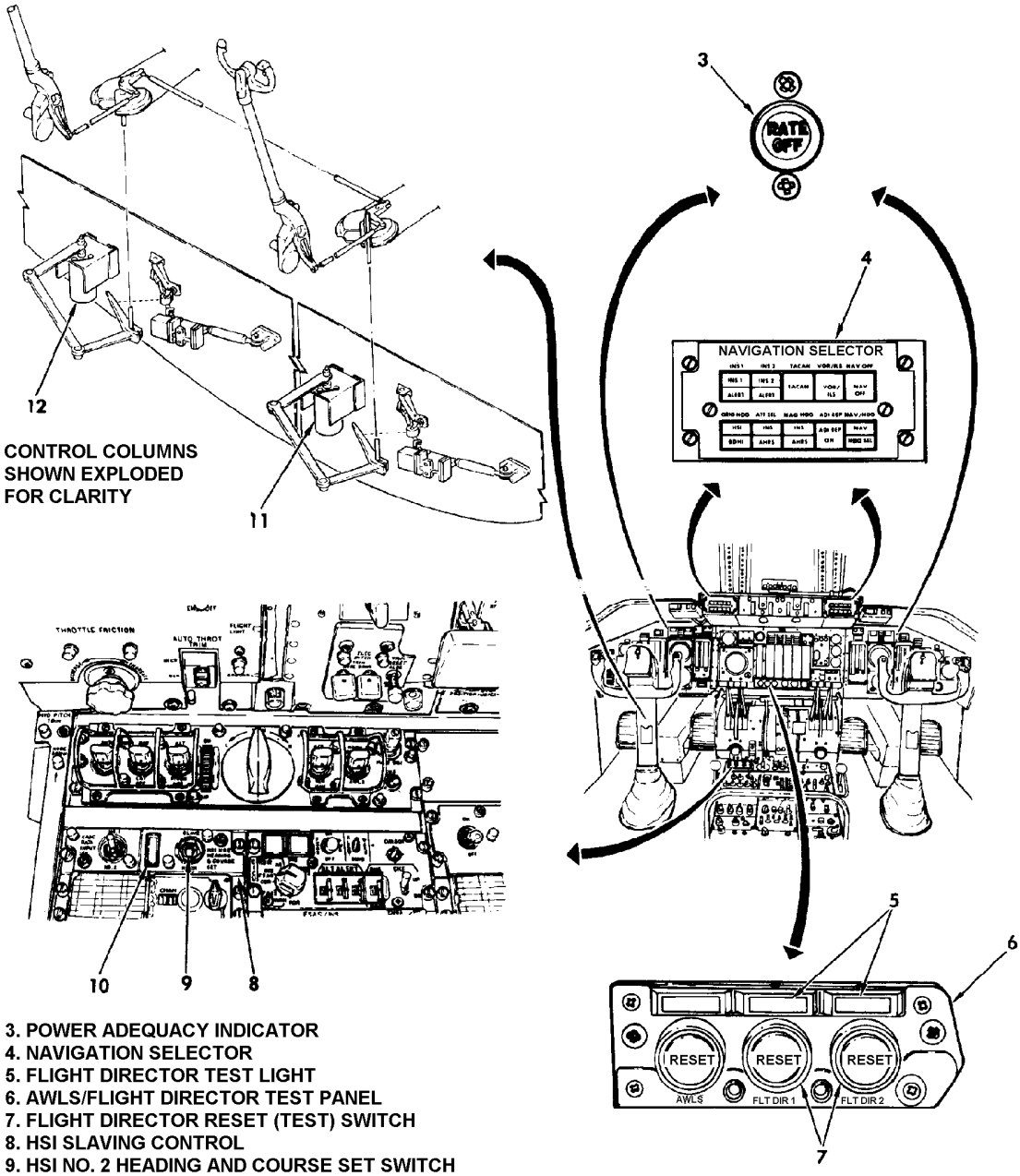

3. POWER ADEQUACY INDICATOR
4. NAVIGATION SELECTOR
5. FLIGHT DIRECTOR TEST LIGHT
6. AWLS/FLIGHT DIRECTOR TEST PANEL
7. FLIGHT DIRECTOR RESET (TEST) SWITCH
8. HSI SLAVING CONTROL
9. HSI NO. 2 HEADING AND COURSE SET SWITCH
10. SLAVE LIGHT
11. PILOT'S ELEVATOR POSITION TRANSMITTER
12. COPILOT'S ELEVATOR POSITION TRANSMITTER

Flight Director System Components (Sheet 2 of 3)

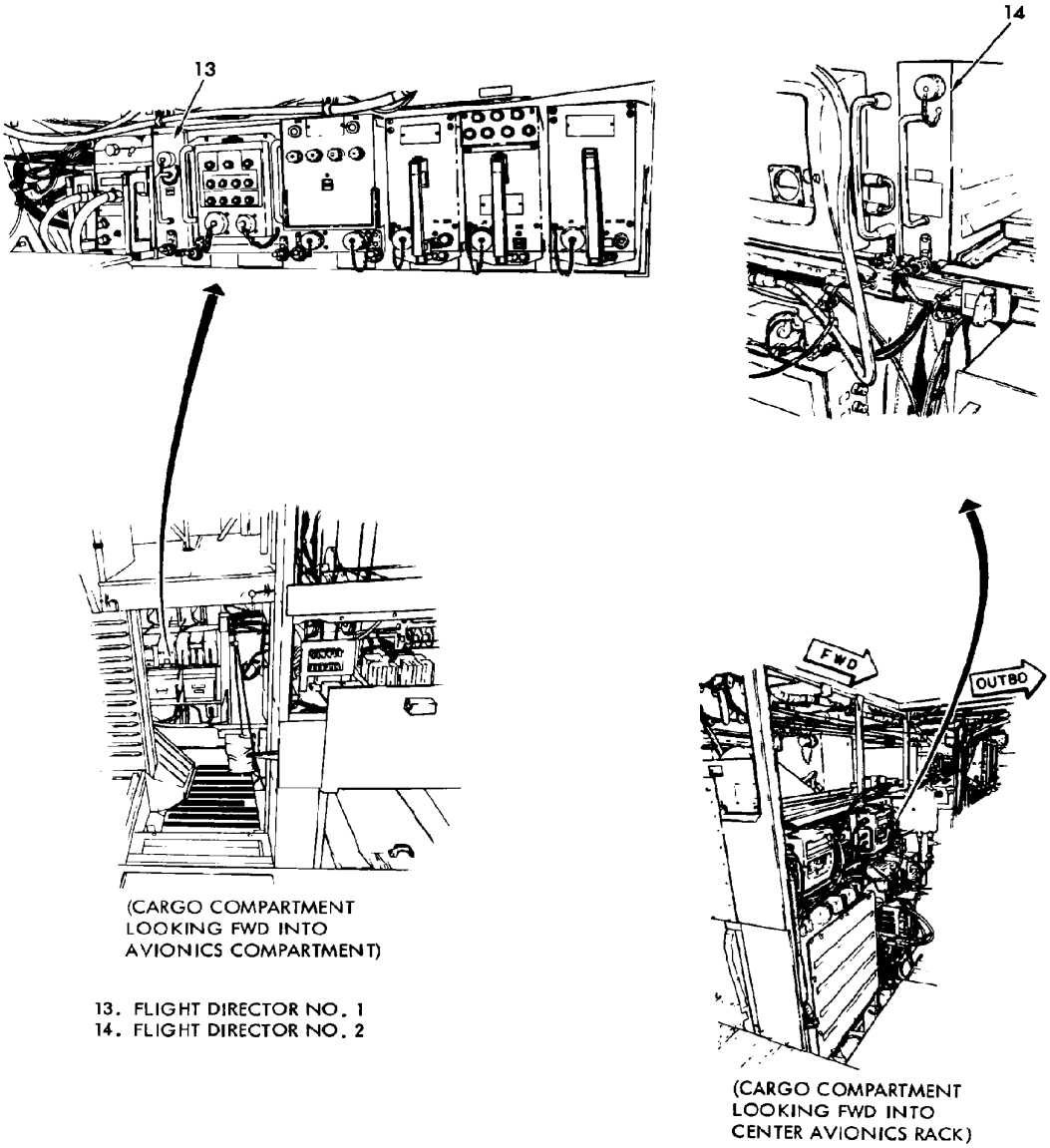

Flight Director System Components (Sheet 3 of 3)

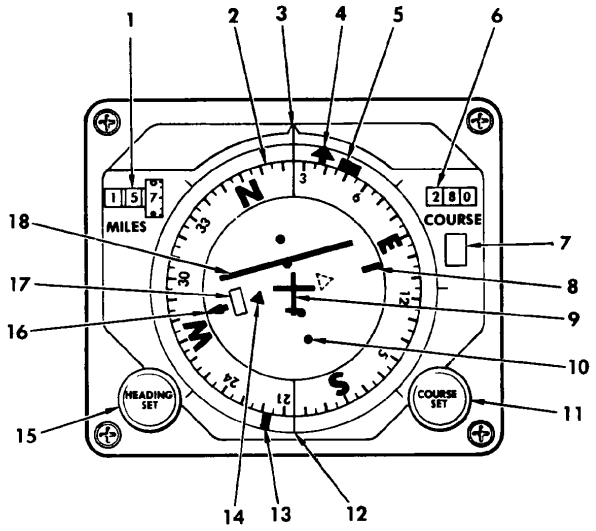

(HORIZONTAL SITUATION INDICATOR)

1. RANGE INDICATOR AND WARNING FLAG
2. COMPASS CARD
3. UPPER LUBBER LINE
4. BEARING POINTER (HEAD)
5. HEADING MARKER
6. COURSE SELECTOR WINDOW
7. POWER OFF WARNING
8. COURSE ARROW (TAIL)
9. AIRPLANE SYMBOL
10. COURSE DEVIATION SCALE
11. COURSE SET KNOB
12. LOWER LUBBER LINE
13. BEARING POINTER TAIL
14. TO-FROM INDICATOR
15. HEADING SET KNOB
16. COURSE ARROW (HEAD)
17. COURSE WARNING FLAG
18. COURSE DEVIATION INDICATOR

Horizontal Situation Indicator

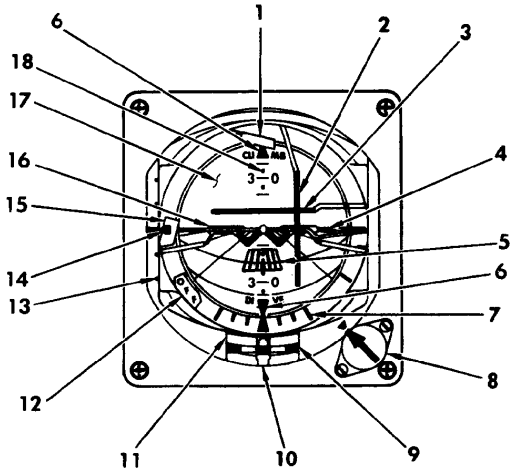

(ATTITUDE DIRECTOR INDICATOR)

1. COURSE WARNING FLAG
2. BANK STEERING BAR
3. PITCH STEERING BAR
4. HORIZON BAR
5. ALTITUDE POINTER (RUNWAY SYMBOL)
6. BANK POINTERS
7. BANK SCALE
8. PITCH TRIM KNOB
9. RATE OF TURN SCALE
10. RATE OF TURN INDICATOR
11. TURN AND SLIP INDICATOR
12. ATTITUDE WARNING FLAG
13. GLIDESLOPE DEVIATION SCALE
14. DISPLACEMENT POINTER (GLIDESLOPE)
15. GLIDESLOPE WARNING FLAG
16. MINIATURE AIRPLANE
17. ATTITUDE SPHERE
18. PITCH REFERENCE SCALE

Attitude Director Indicator

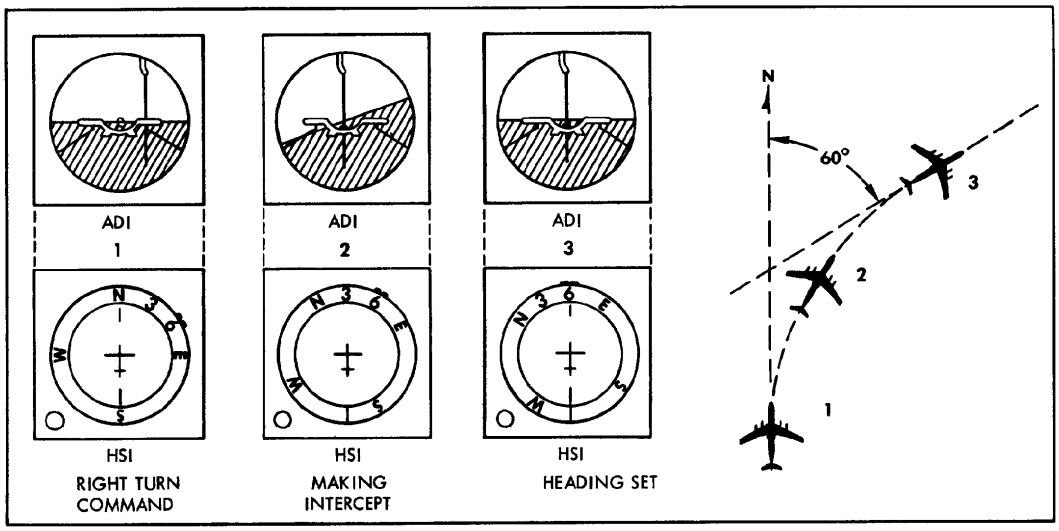

Typical Manual Heading Presentation

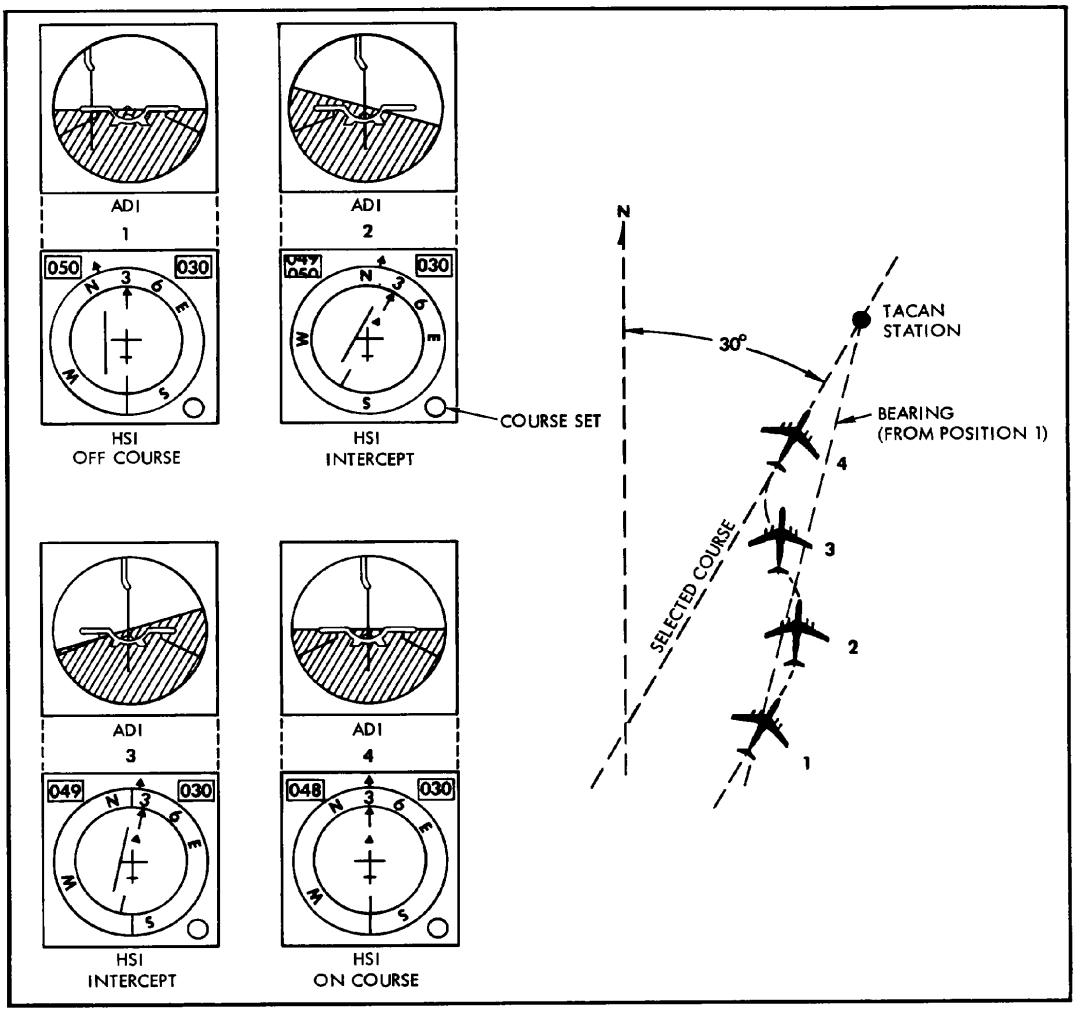

Typical TACAN or VOR Presentation

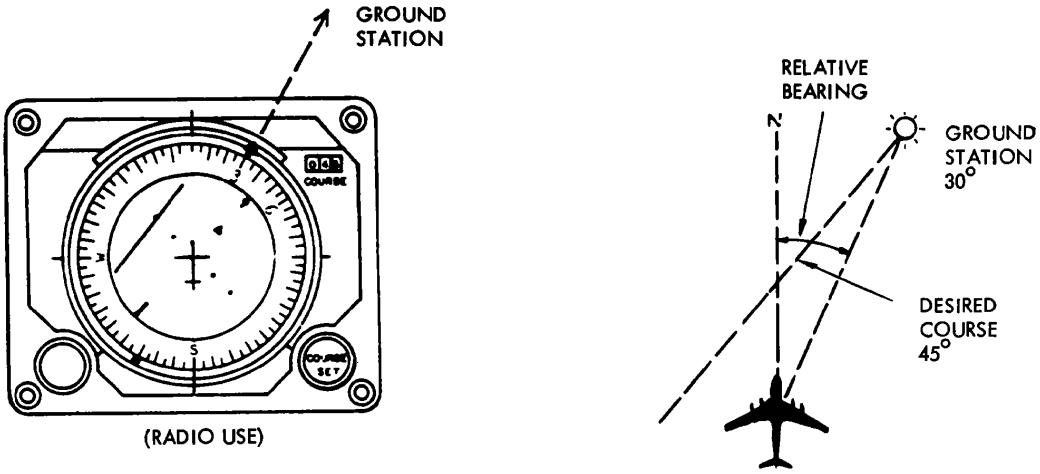

Simplified TACAN of VOR Bearing and Course Display

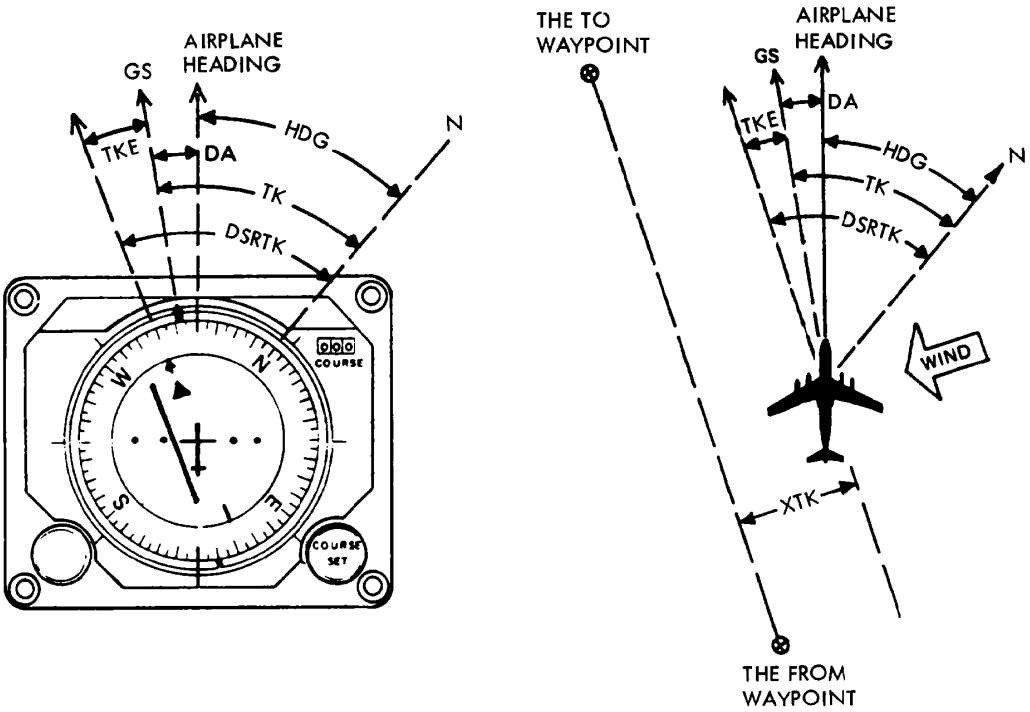

HSI Display of INS Data

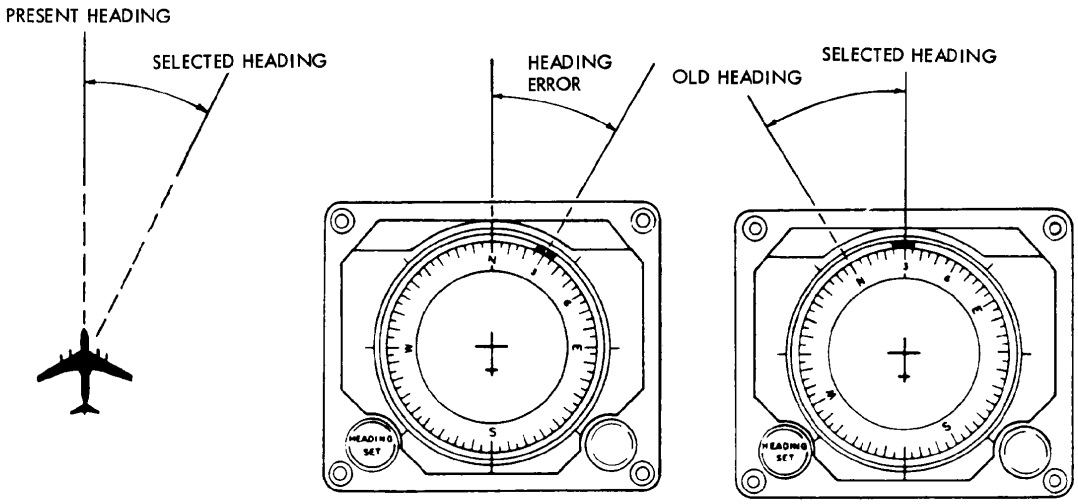

Simplified Selected Heading Error and On Heading Display

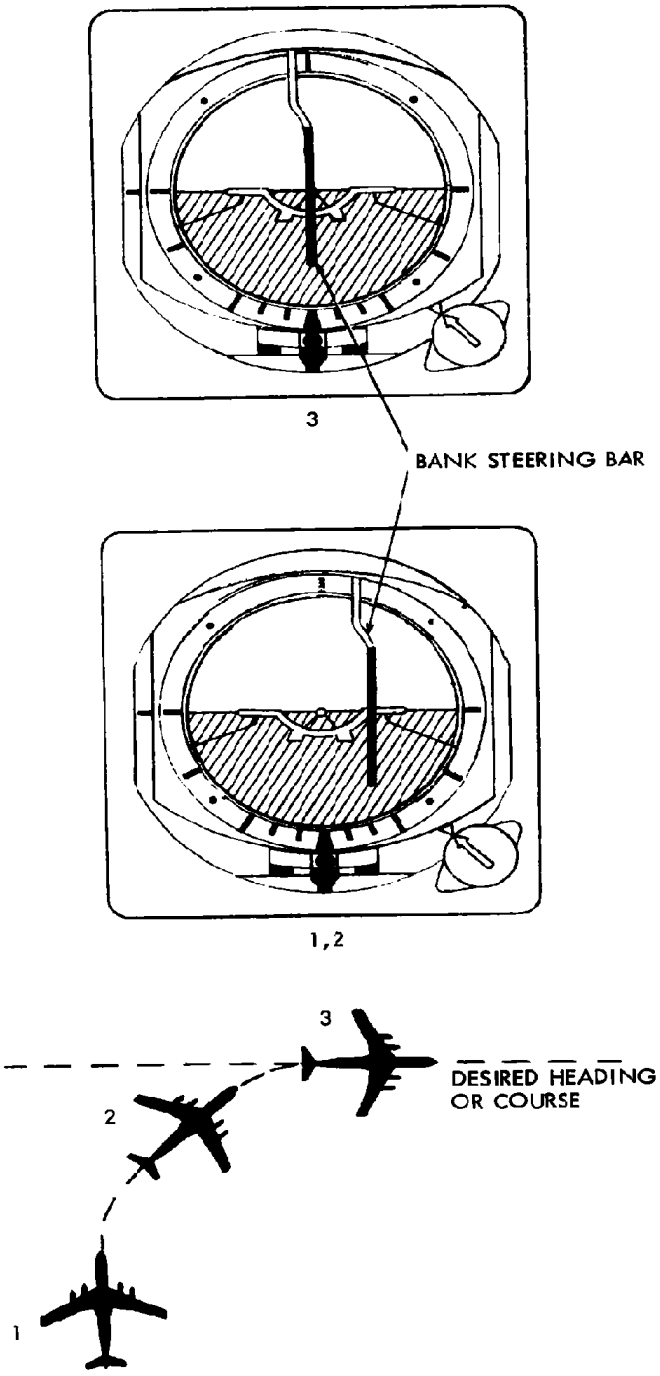

Computed Lateral Guidance

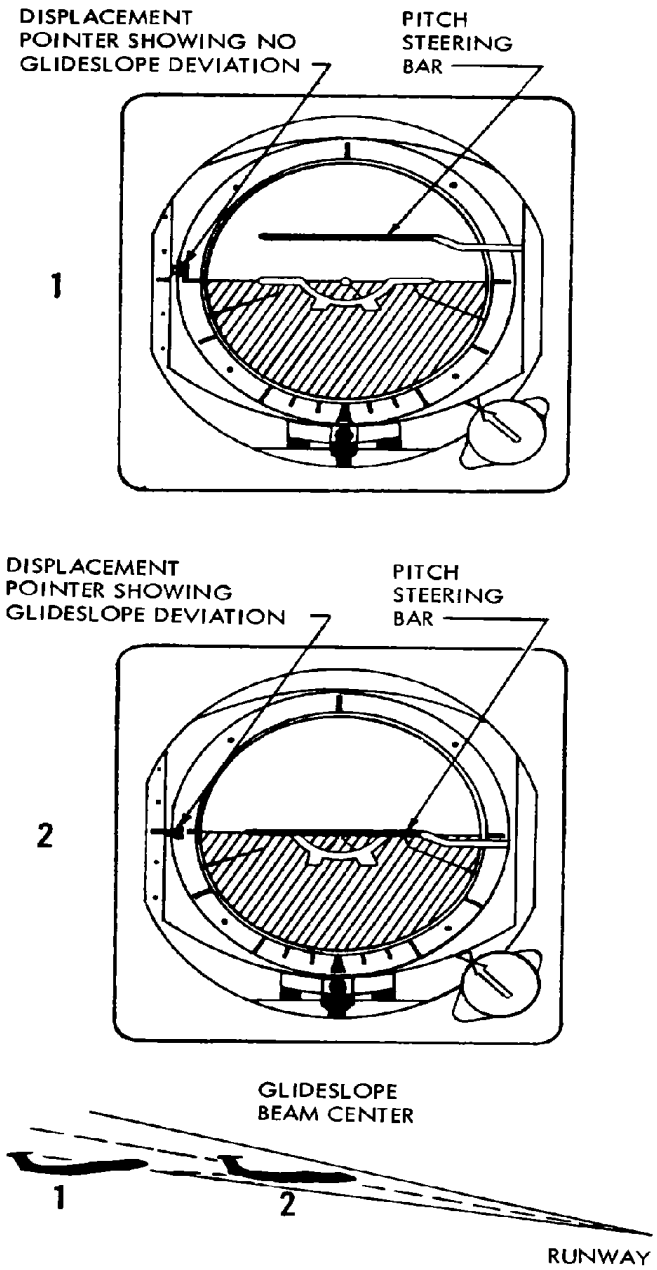

Computed Vertical Guidance

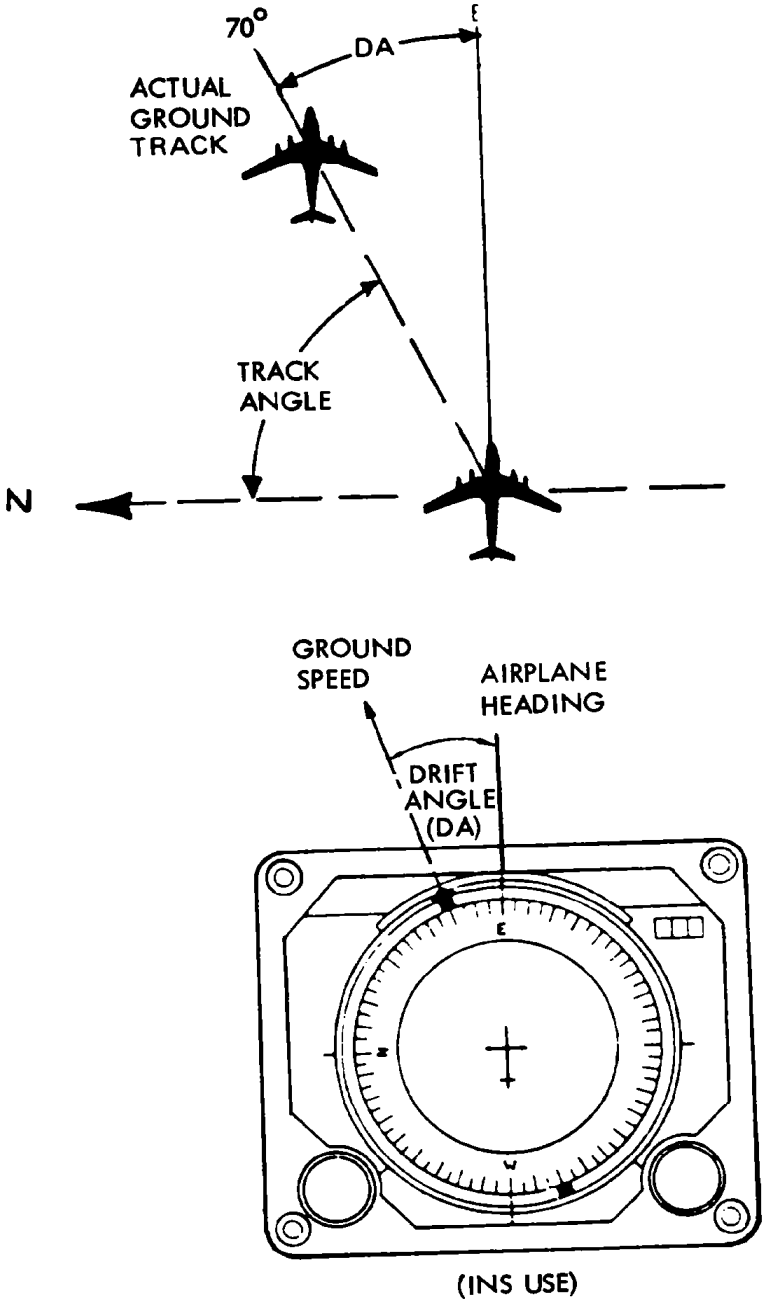

Simplified Track Angle Error Display

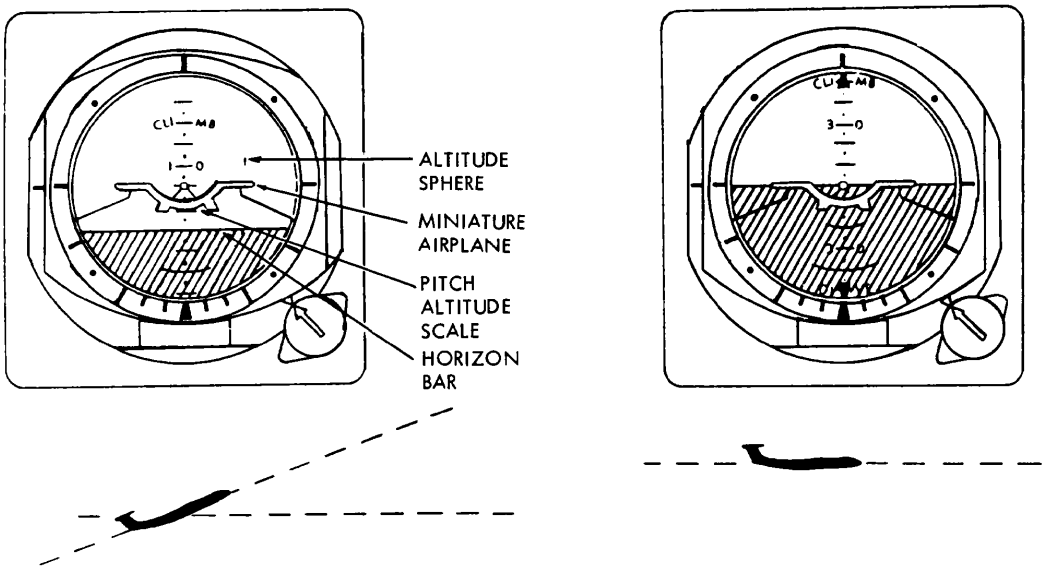

Pitch Attitude Display

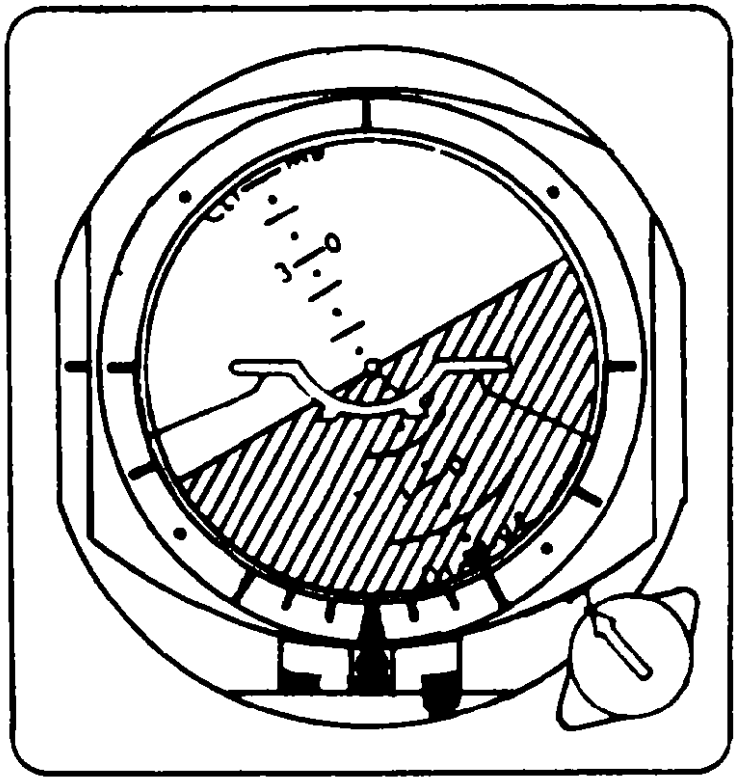

(VIEW FROM THE REAR)

Thirty-Degree Right Bank

Glideslope (G/S) System

The G/S systems are used by the pilot and copilot as a landing aid. Two complete G/S systems are on the airplane: the pilot's G/S system No. 1 and the copilot's G/S system No. 2. The G/S systems are used together with the VHF navigation systems during an instrument approach to the runway. As a part of the instrument landing system (ILS), they rely on a ground based transmitting system. The ground based system is located near the approach end of the runway. The G/S systems supply vertical guidance information and the VHF navigation systems supply lateral guidance information. The information is presented as steering commands on the pilot's and copilot's attitude director indicators (ADI).

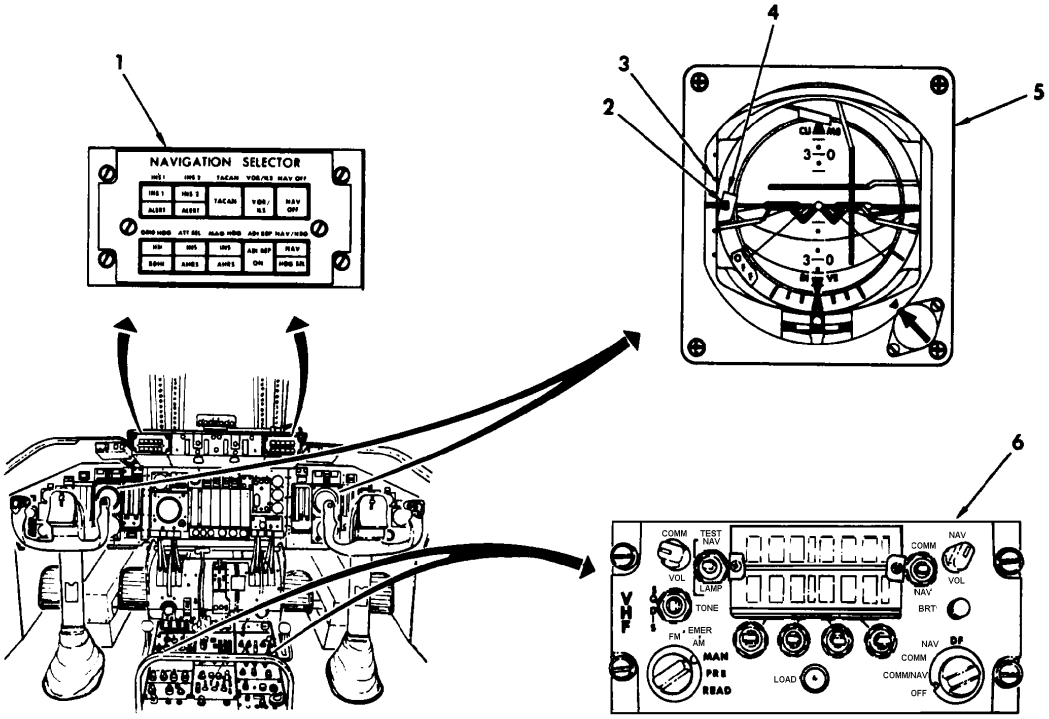

1. NAVIGATION SELECTOR
2. GLIDESLOPE DISPLACEMENT POINTER
3. GLIDESLOPE DEVIATION SCALE
4. GLIDESLOPE WARNING FLAG
5. ATTITUDE DIRECTOR INDICATOR
6. VHF COMM/NAV CONTROL PANEL

Glideslope (G/S) System Components (Sheet 1 of 2)

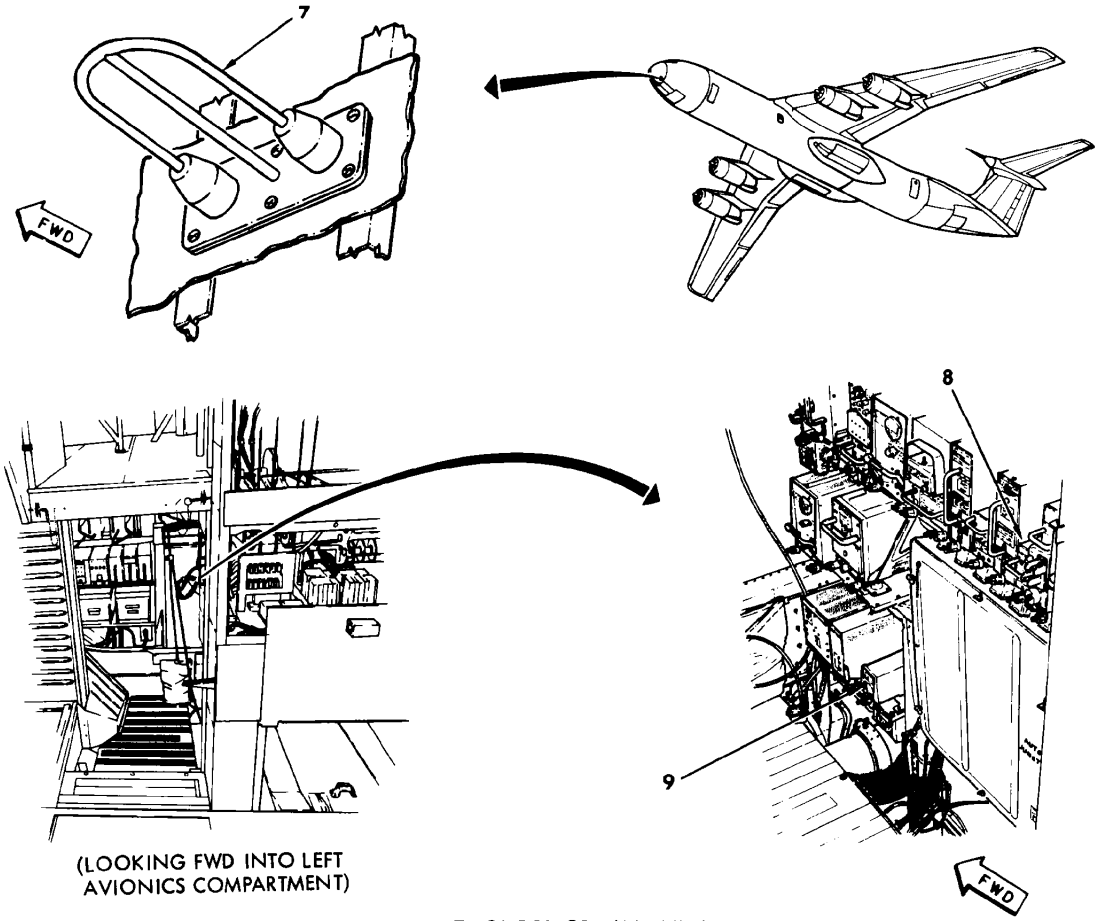

7. GLIDESLOPE ANTENNA
8. GLIDESLOPE RECEIVER NO. 1
9. GLIDESLOPE RECEIVER NO. 2

Glideslope (G/S) System Components (Sheet 2 of 2)

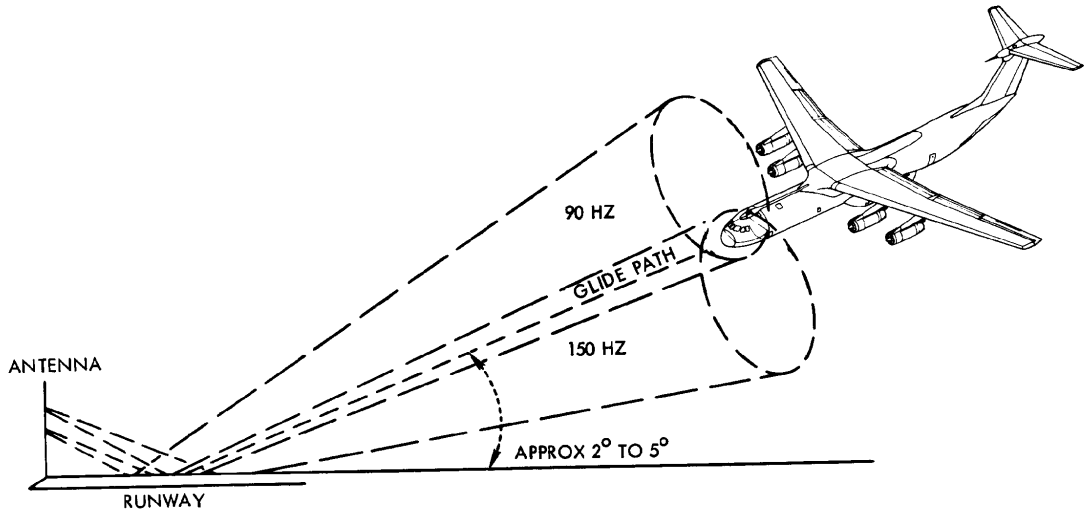

Typical Glideslope (G/S) (Sheet 1 of 2)

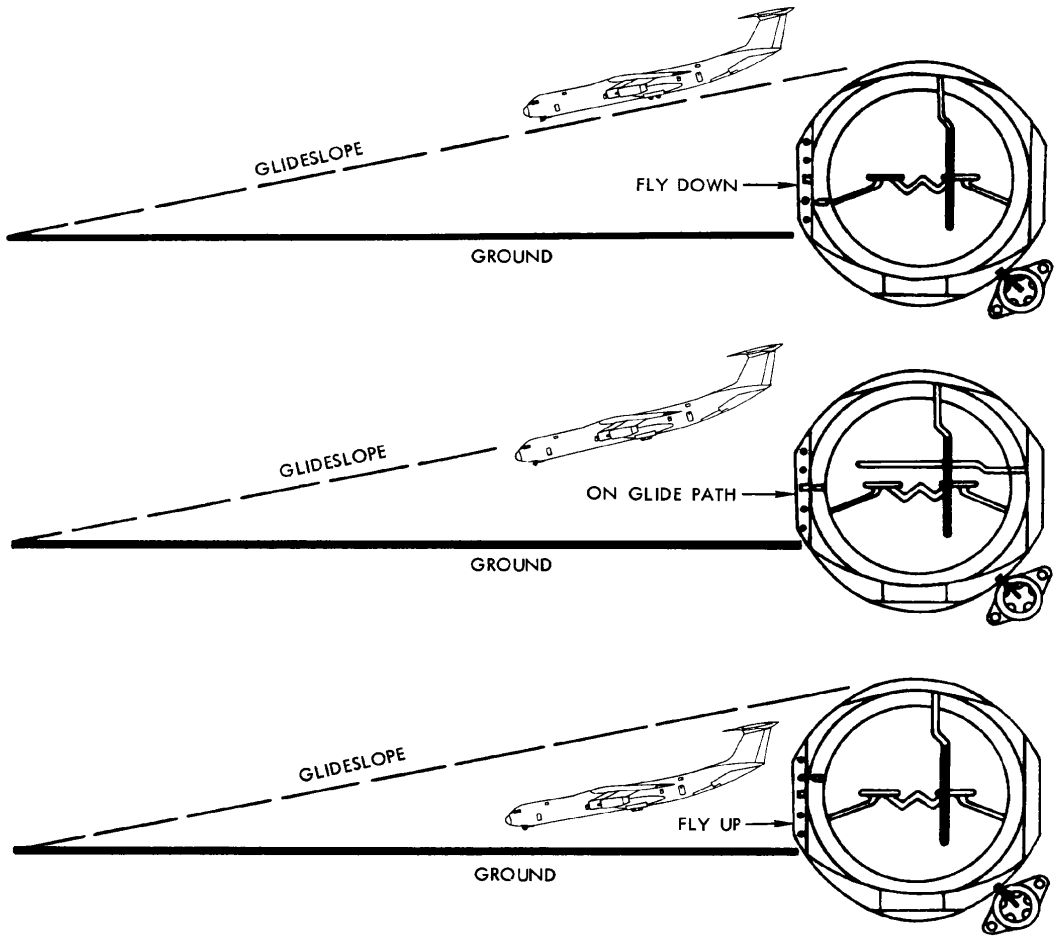

Typical Glideslope (G/S) (Sheet 2 of 2)

Marker Beacon System

The marker beacon system informs the flight crew when the airplane passes over a marker beacon ground station. The system provides the pilot and copilot with both visual and audio indications. Visual indications of station passage is provided by three indicator lights. Audio indication is by coded tones heard over the interphone system in the flight crew's headsets. Two types of marker beacon ground stations exist: the airways type and the instrument landing system (ILS) type. The airways type is used as a navigation aid during cross-country flights. The airways type transmits an audio tone in morse code of its station identification, and also causes an indicator light to come on. The ILS type station provides three marker reference points along the runway approach. Reference point identification is provided by three different audio tones heard over the interphone system. A set of indicator lights will sequence on during an approach.

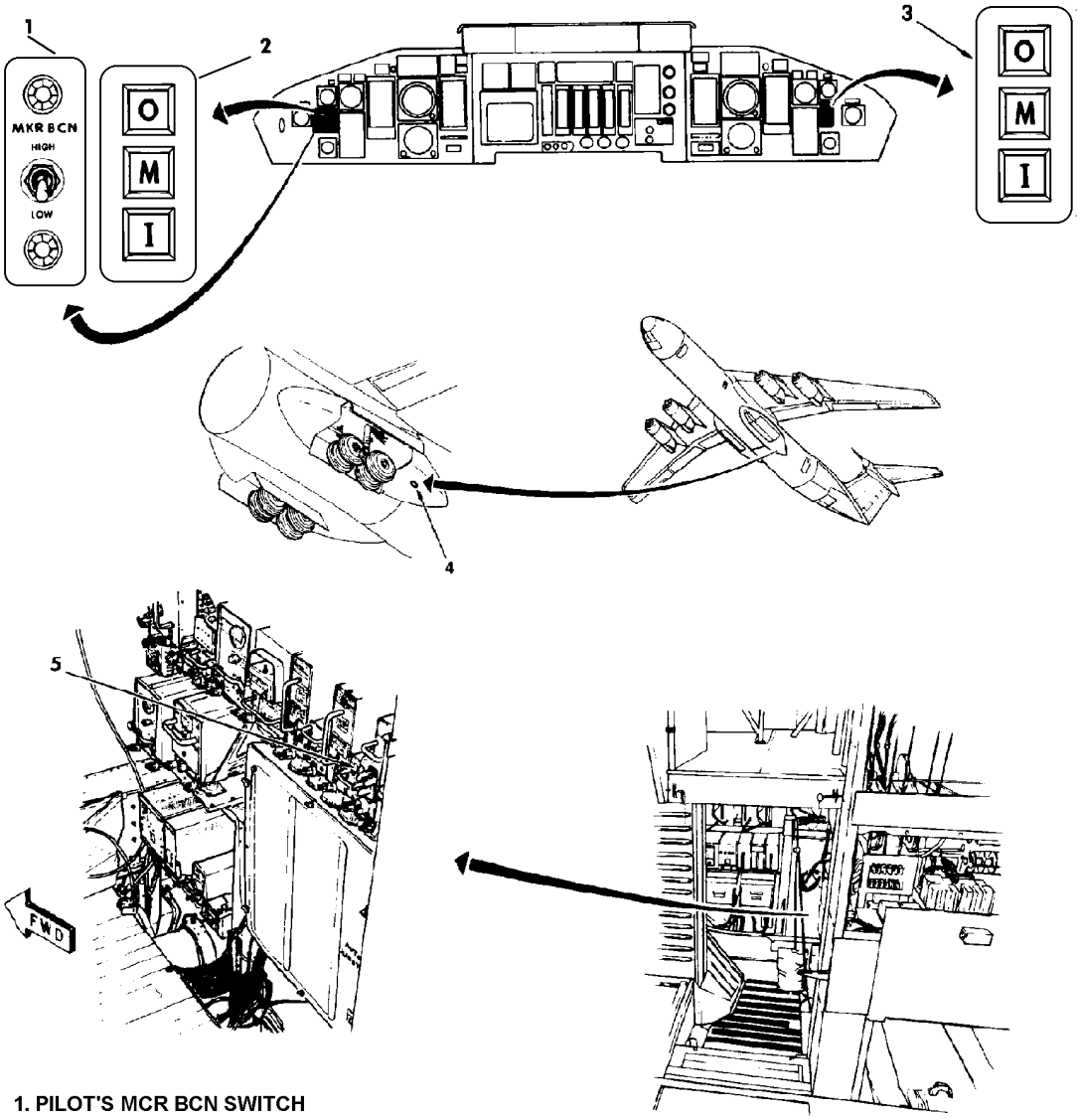

1. PILOT'S MCR BCN SWITCH
2. PILOT'S MARKER BEACON INDICATOR
3. COILOT'S MARKER BEACON INDICATOR
4. MARKER BEACON ANTENNA
5. MARKER BEACON RECEIVER

LOOKING FWD INTO LEFT
AVIONICS COMPARTMENT

Marker Beacon System Components

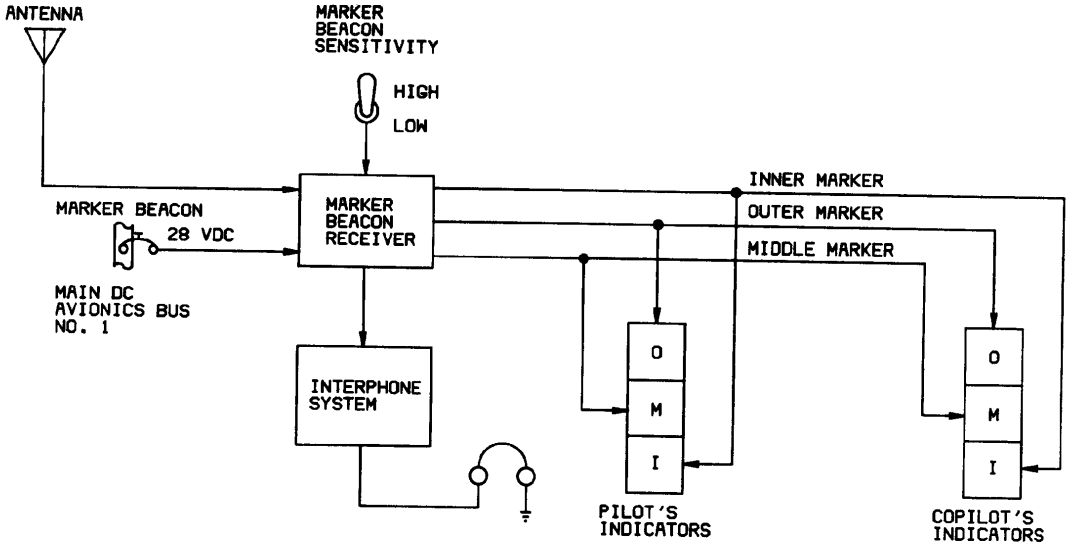

Marker Beacon System Data Flow

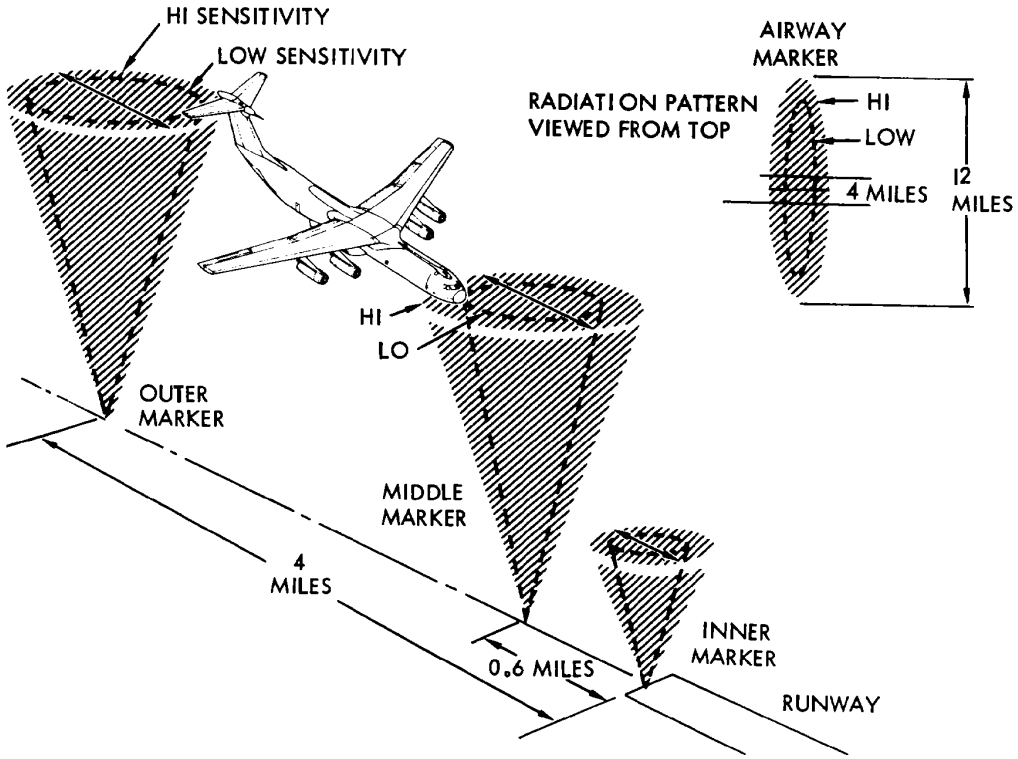

Typical Marker Beacon Ground Stations

Identification Friend or Foe (IFF) System

The IFF system provides automatic radar identification of the airplane when interrogated by surface or airborne radar sets. This APX-72 IFF is the airborne portion of the air traffic control (ATC) radar beacon system. The ATC radar beacon system is an international network that controls and monitors movement of all airplanes. Stations are strategically located to provide the most coverage in the most densely travelled areas of the world. Also, the system enables friendly airplanes to identify themselves apart from other friendly airplanes and provides a means of transmitting a special coded signal known as an emergency reply. In addition to the identification information, the reply signal can report the pressure altitude of the airplane.

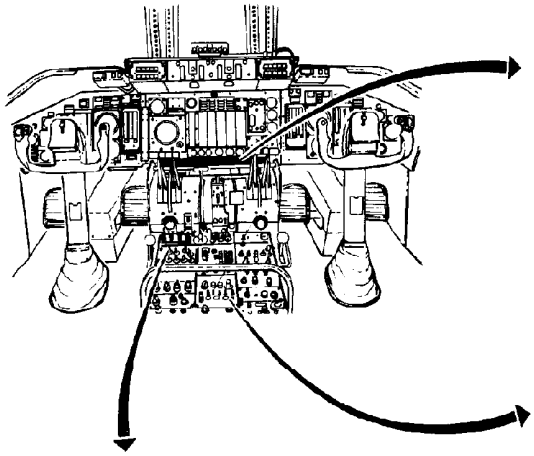

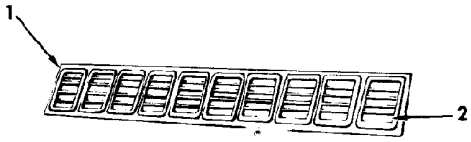

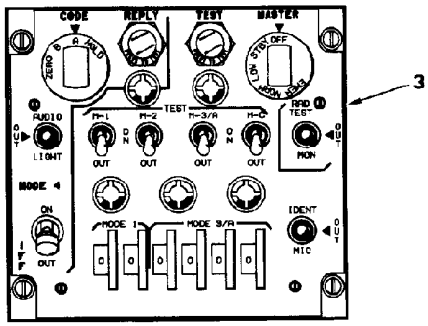

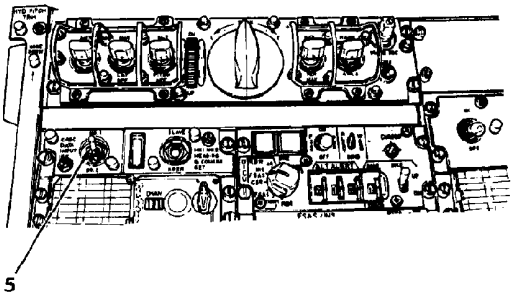

1. ANNUNCIATOR PANEL
2. IFF LIGHT
3. IFF CONTROL PANEL
4. IFF RECEIVER/TRANSMITTER
5. CADC DATA INPUT IFF SELECTOR SWITCH

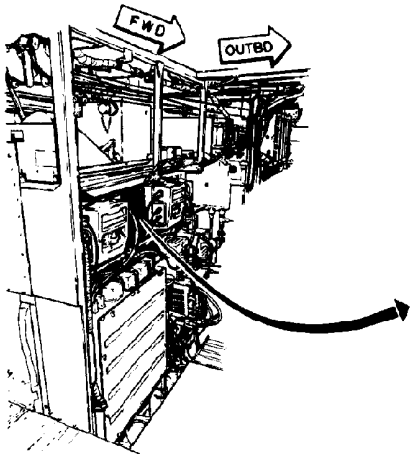

(LOOKING FWD INTO RIGHT AVIONICS COMPARTMENT)

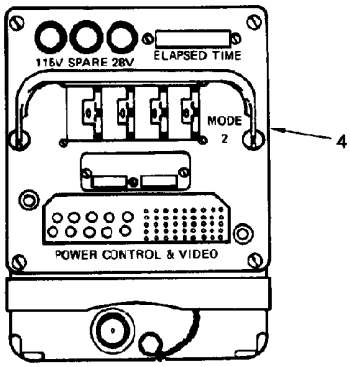

IFF System Components (Sheet 1 of 3)

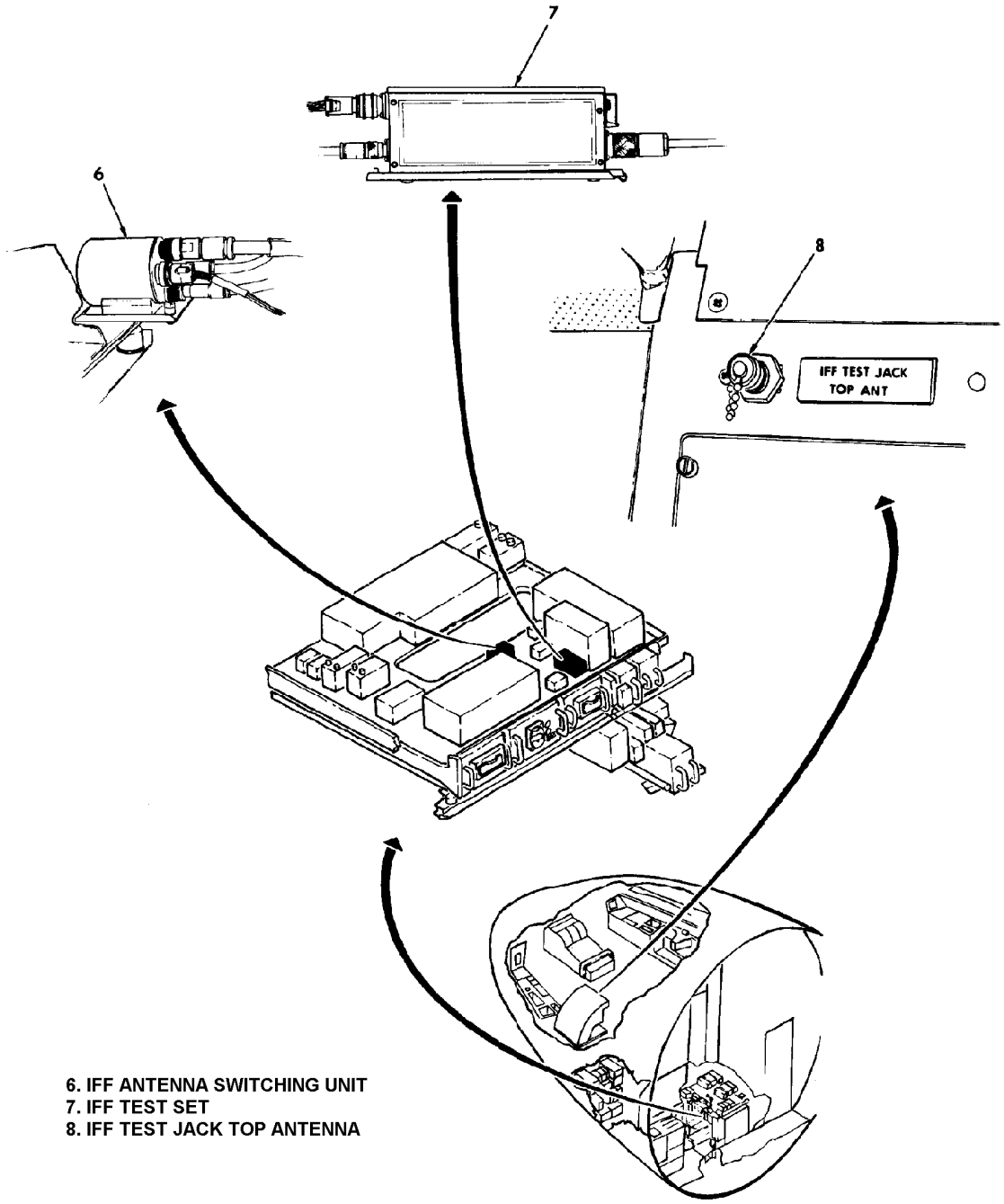

6. IFF ANTENNA SWITCHING UNIT
7. IFF TEST SET
8. IFF TEST JACK TOP ANTENNA

IFF System Components (Sheet 2 of 3)

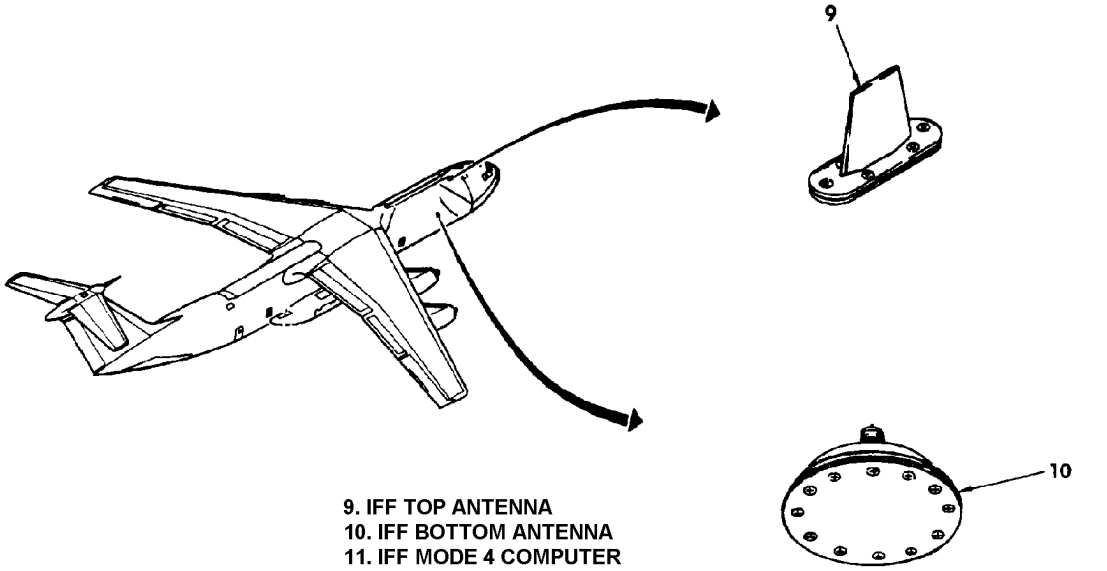

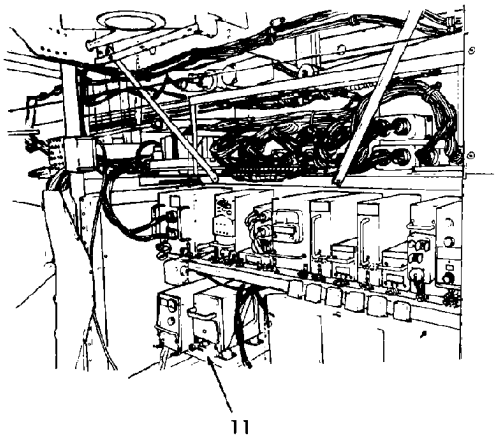

IFF System Components (Sheet 3 of 3)

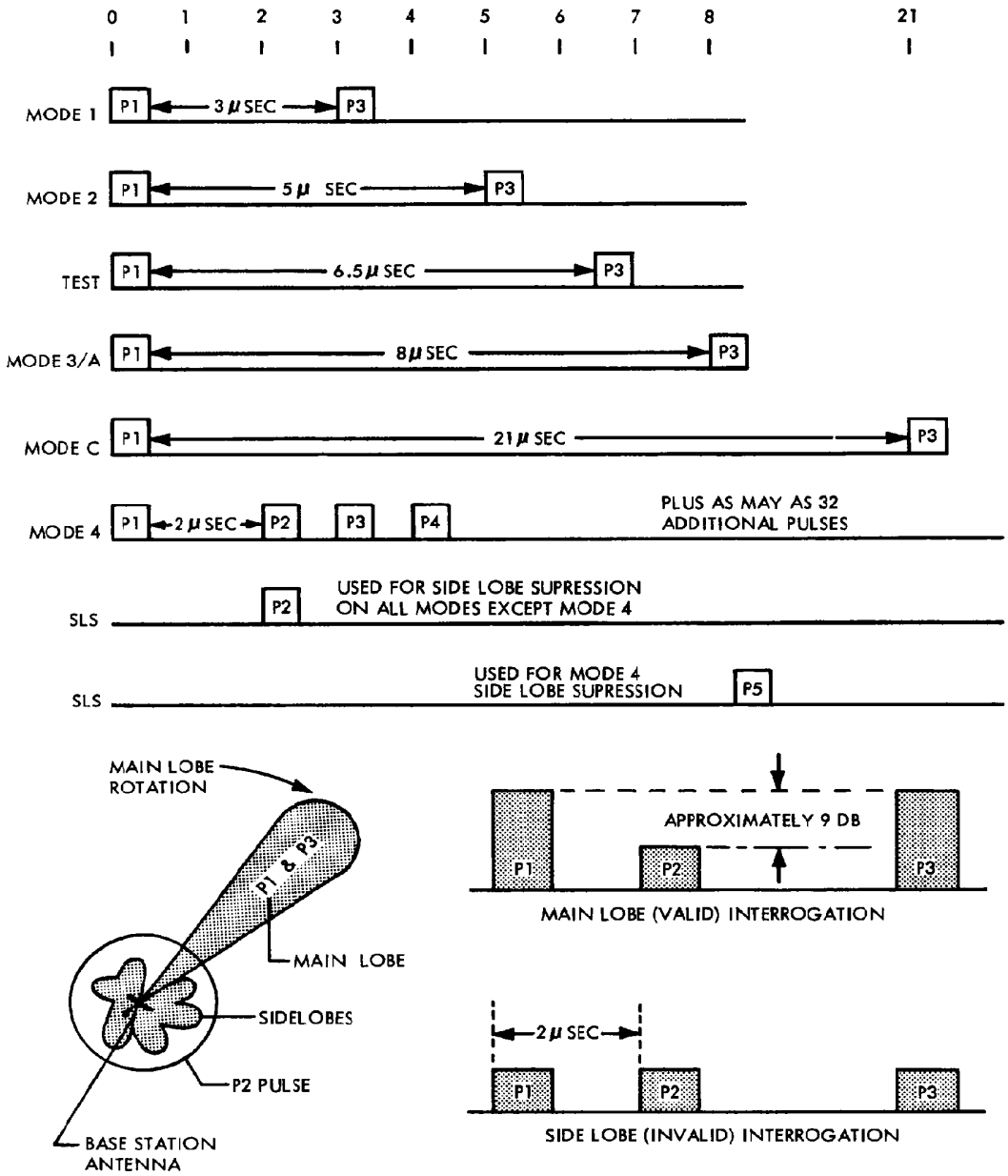

Base Station Interrogation Pulses and Signal Pattern

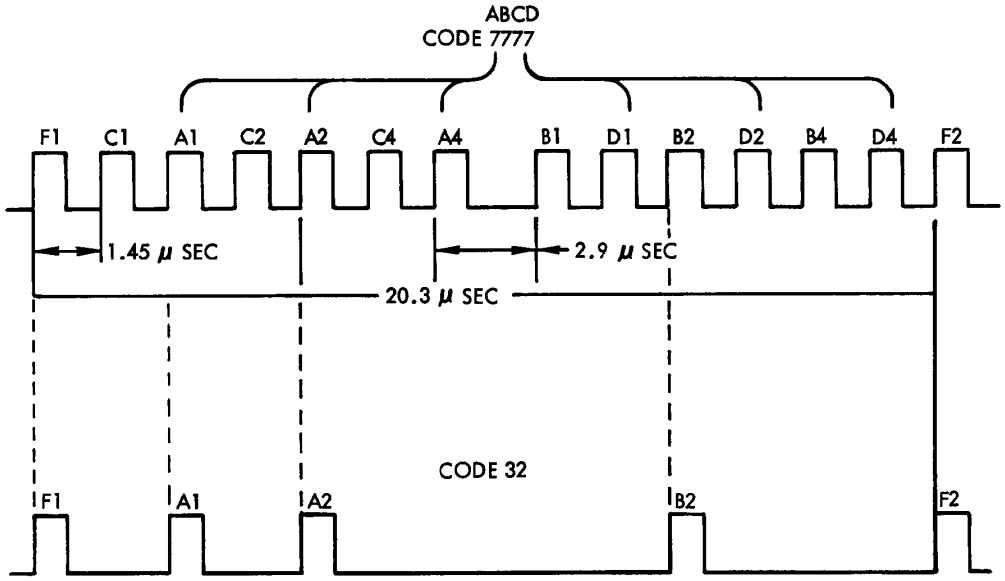

IFF Reply Pulse Train

Weather Radar System

The APS-133 color weather radar system has the primary function of providing weather warning information. The weather radar system can also be used for long and short range terrain mapping, air-to-air mapping, and beacon interrogation. As a weather warning radar set, it provides a display of weather information such as precipitation areas and storm clouds. As a terrain mapping radar, it provides a display of prominent terrain features such as cities, shorelines, islands, and high ground as an aid to navigation. As a beacon interrogation set, it interrogates ground or air beacons within range and displays their response(s) as a further aid to navigation. As an air-to-air mapping radar, it provides a display of other airplanes in the vicinity. The set also generates fixed azimuth cursors, fixed and variables range markers, and explanatory alphanumerics. This information is presented as a color coded display on 4-color multifunction displays mounted at the pilot's center instrument panel and, on station keeping equipped (SKE) airplanes, at the navigator's position.

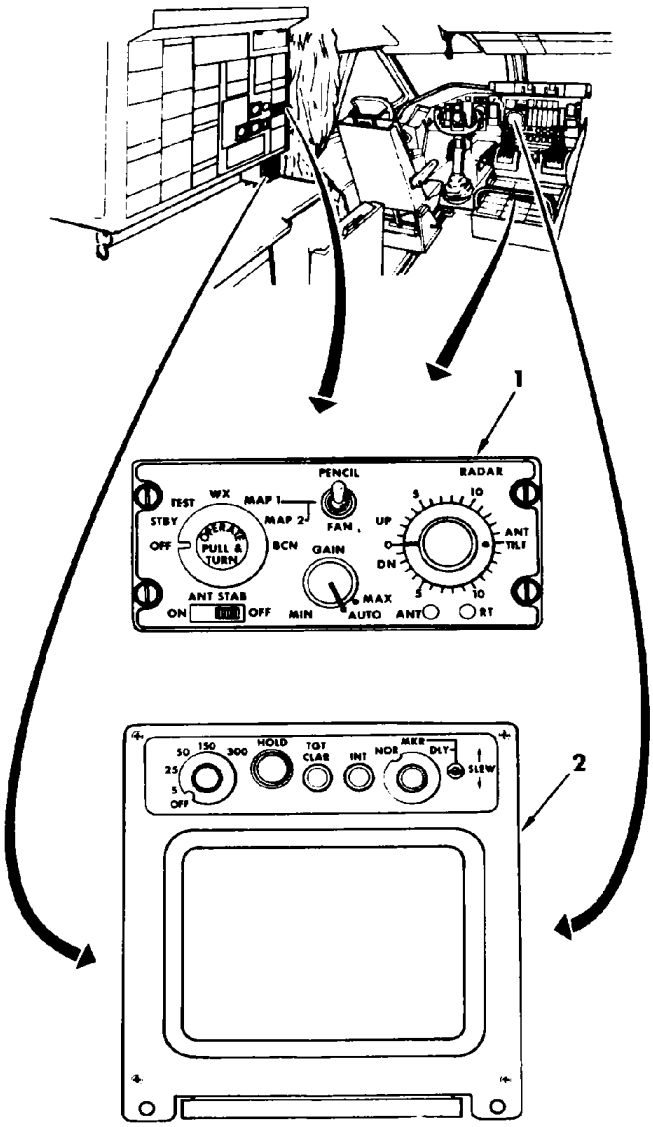

1. RADAR CONTROL PANEL (NOTE: ON SKE EQUIPPED AIRPLANES MAY BE INSTALLED IN NAVIGATOR'S INSTRUMENT PANEL OR CENTER CONSOLE.)

2. MULTIFUNCTION DISPLAY (SKE EQUIPPED AIRPLANES HAVE TWO MFD INSTALLED)

Weather Radar System Components (Sheet 1 of 2)

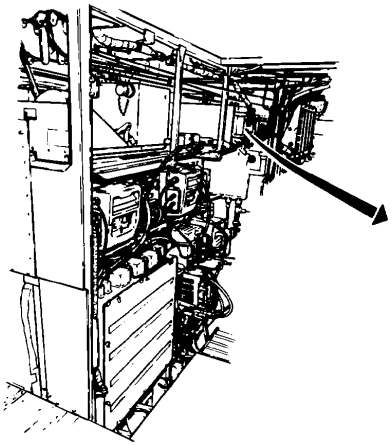

(LOOKING FWD INTO RIGHT AVIONICS COMPARTMENT)

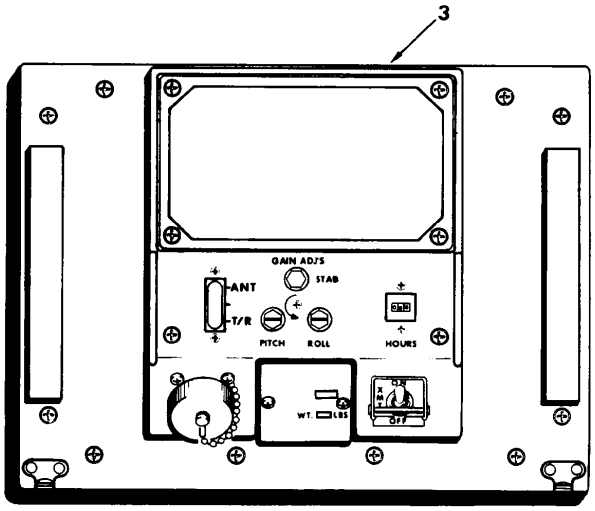

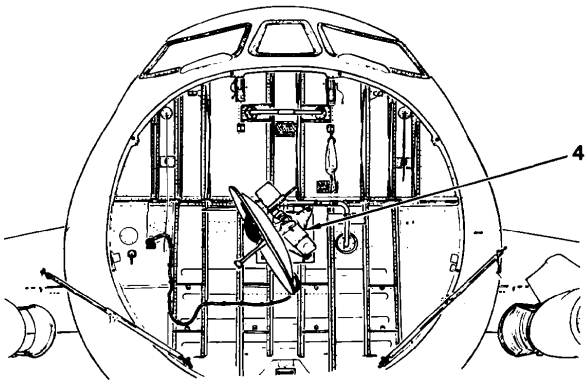

(RADOME REMOVED FOR CLARITY)

3. RECEIVER -TRANSMITTER
4. ANTENNA

Weather Radar System Components (Sheet 2 of 2)

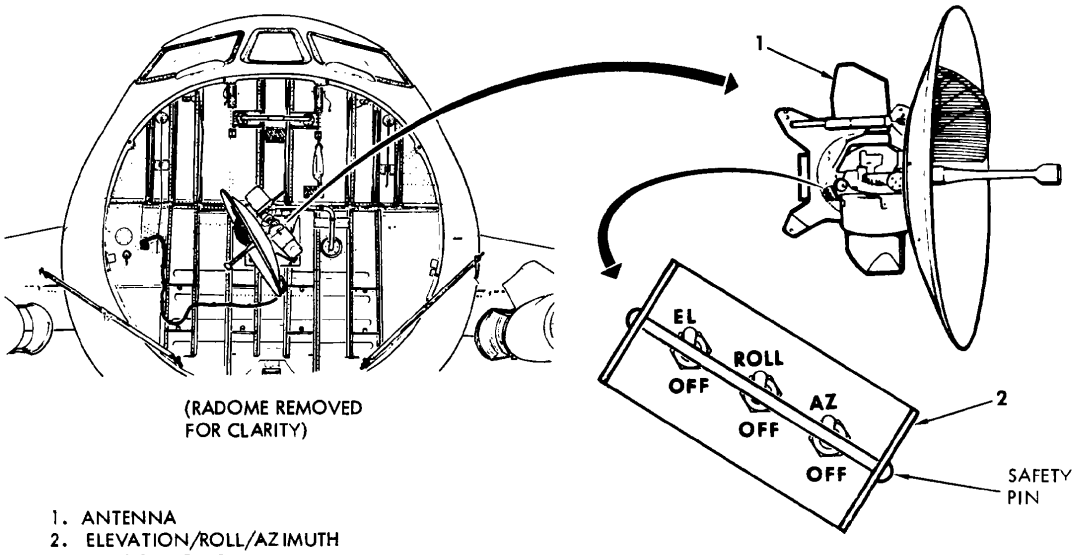

1. ANTENNA
2. ELEVATION/ROLL/AZIMUTH AXES SWITCHES

Weather Radar Antenna Exterior Controls

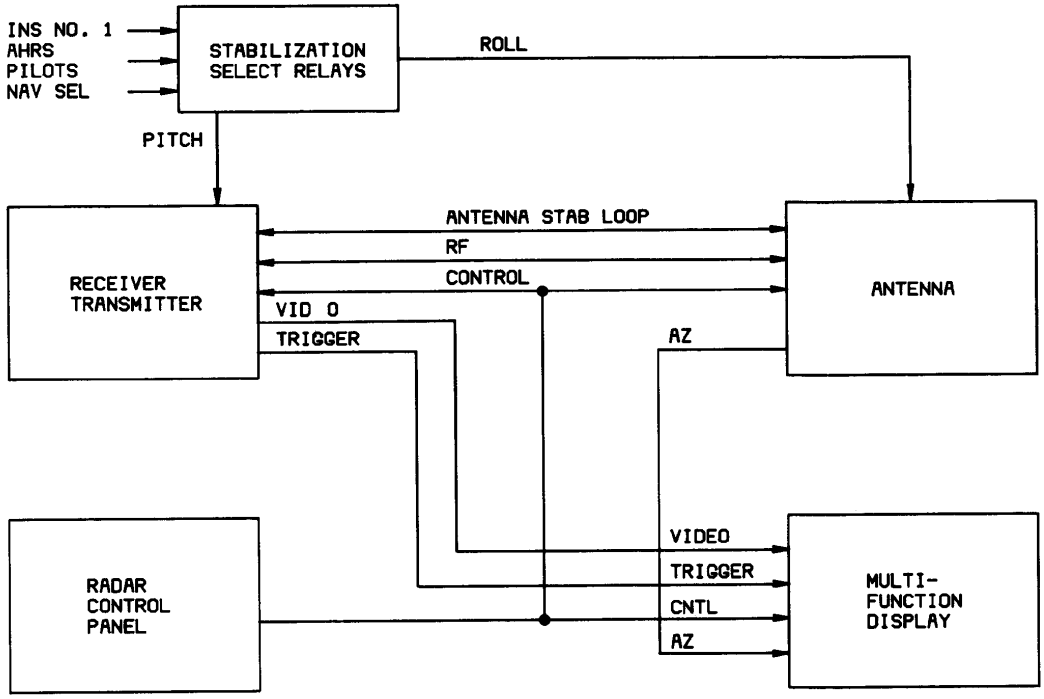

Weather Radar System Block Diagram

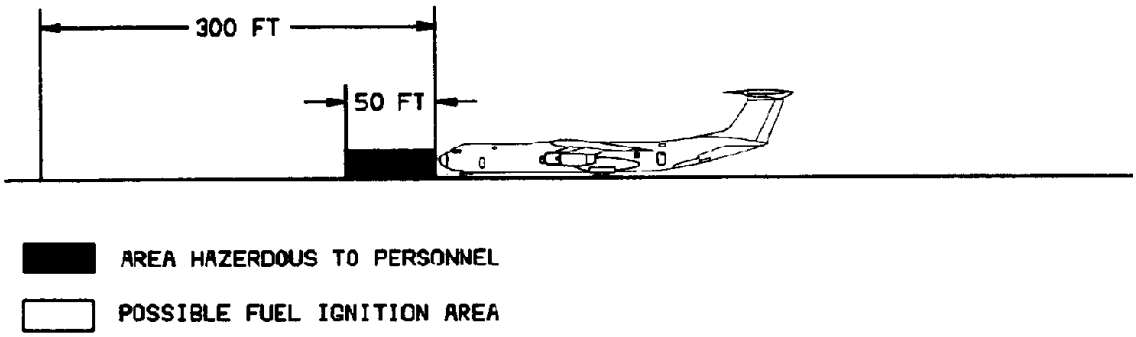

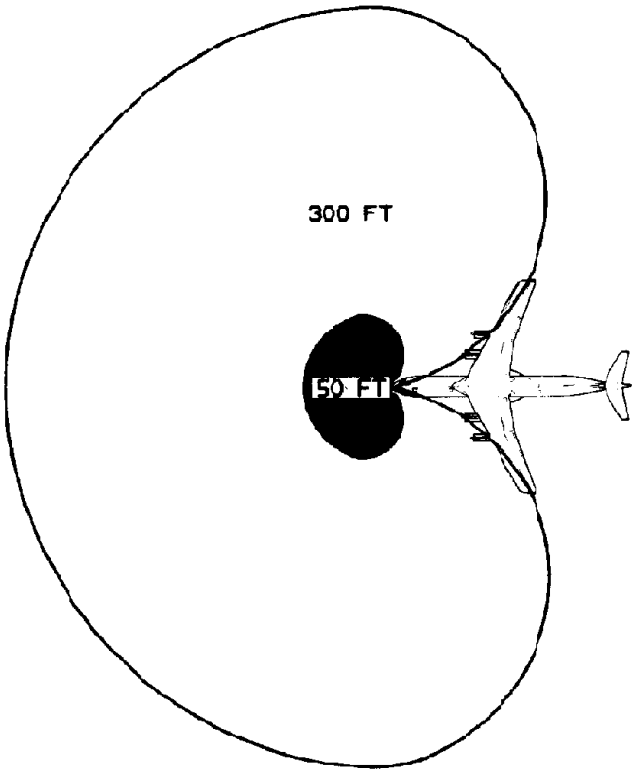

Weather Radar System Hazard Areas

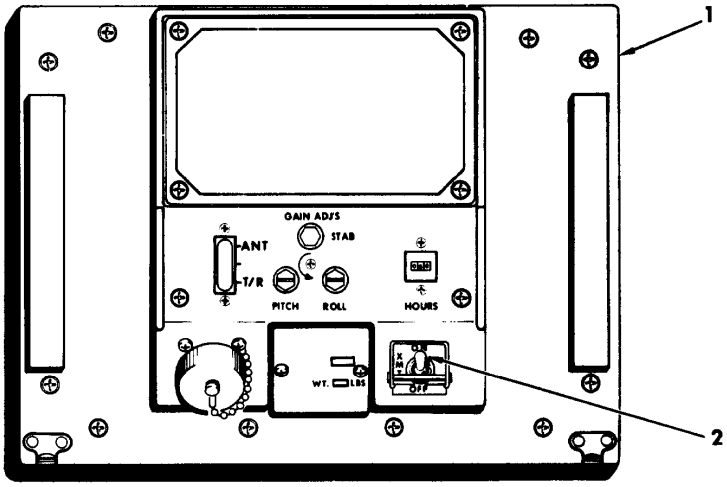

1. WEATHER RADAR RECEIVER-TRANSMITTER
2. WEATHER RADAR TEST SWITCH

(LOCATED IN RIGHT AVIONICS COMPARTMENT)

Weather Radar Receiver-Transmitter

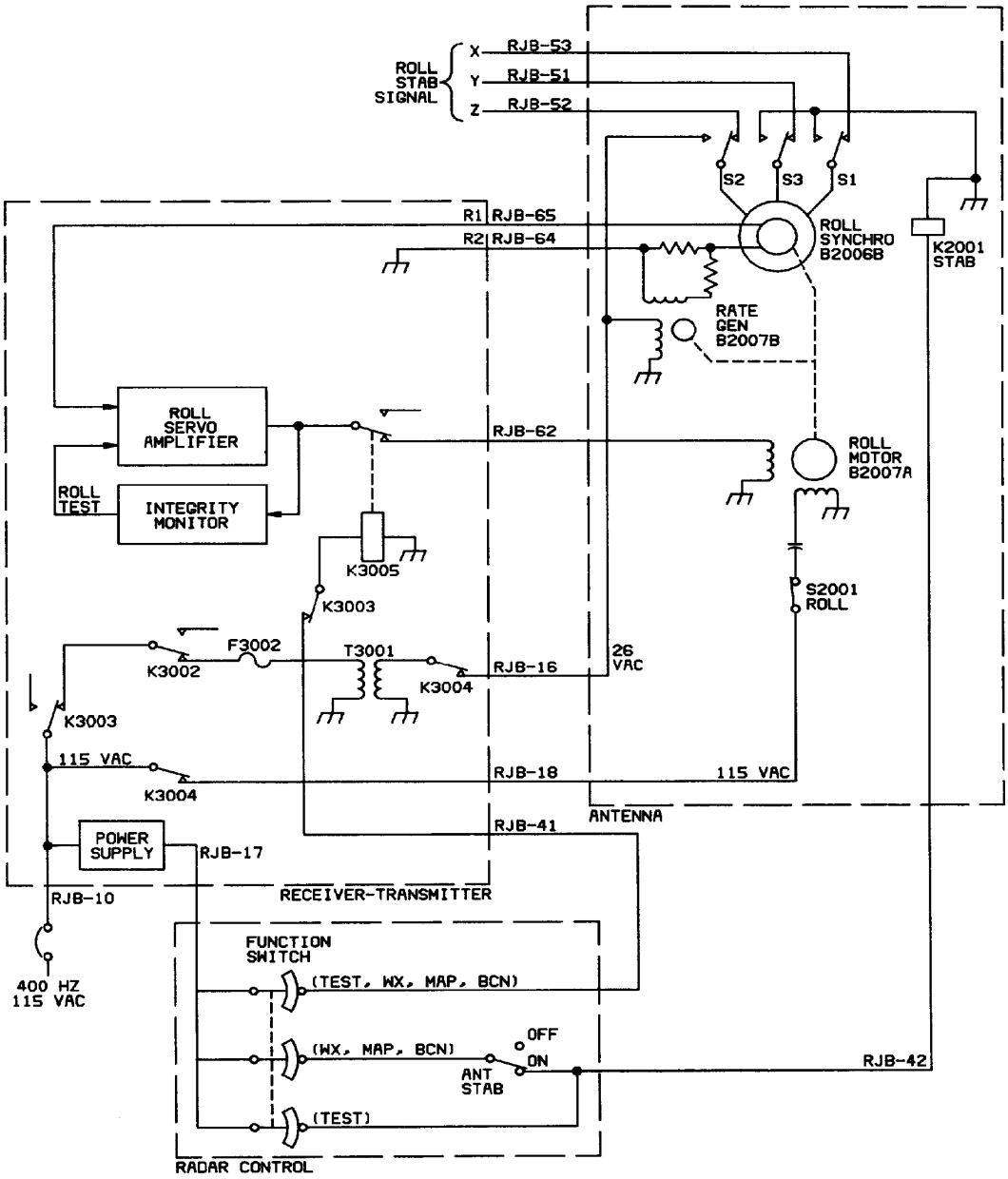

Antenna Roll Stabilization Electrical Schematic Diagram

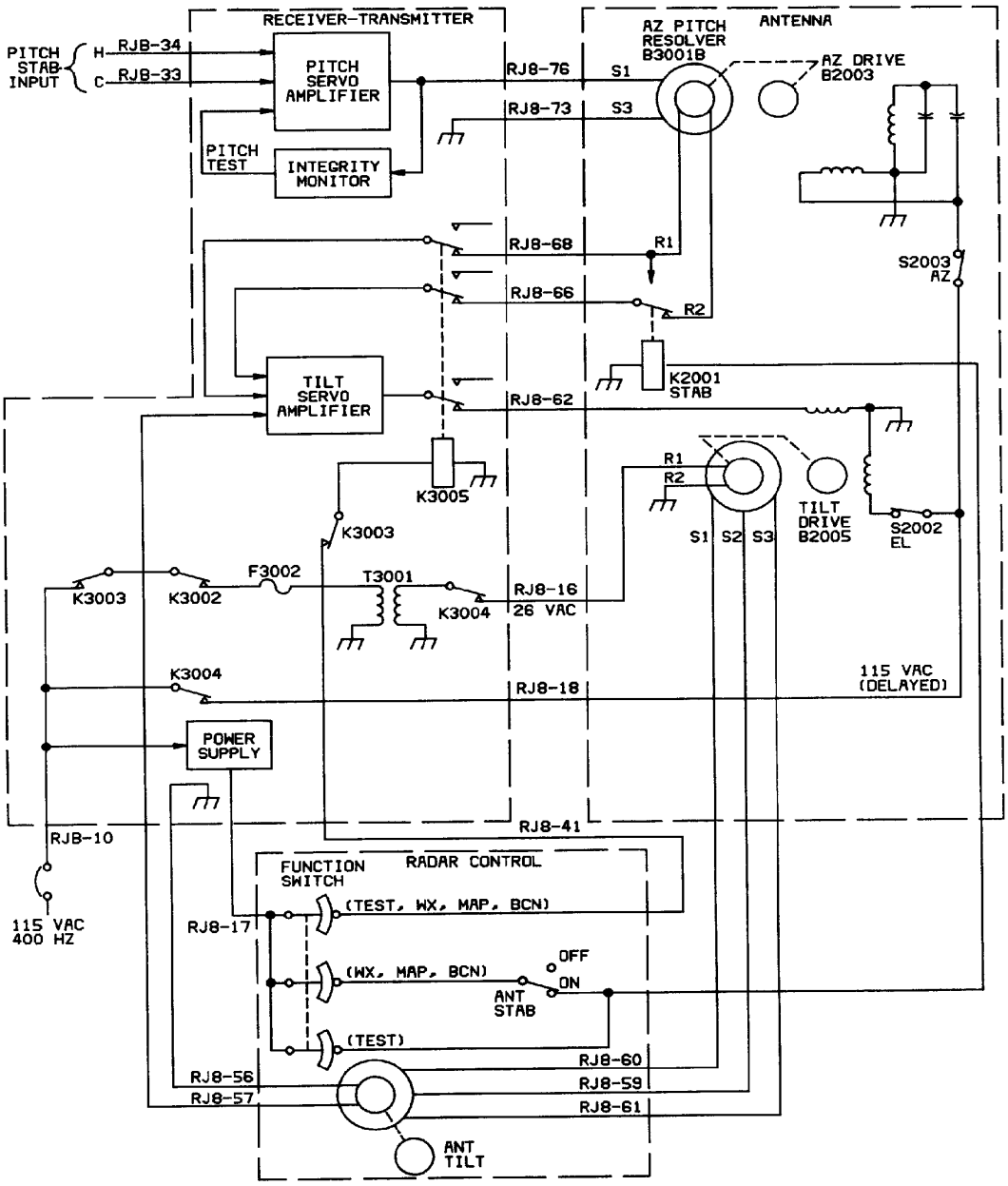

Antenna Pitch Stabilization Electrical Schematic Diagram

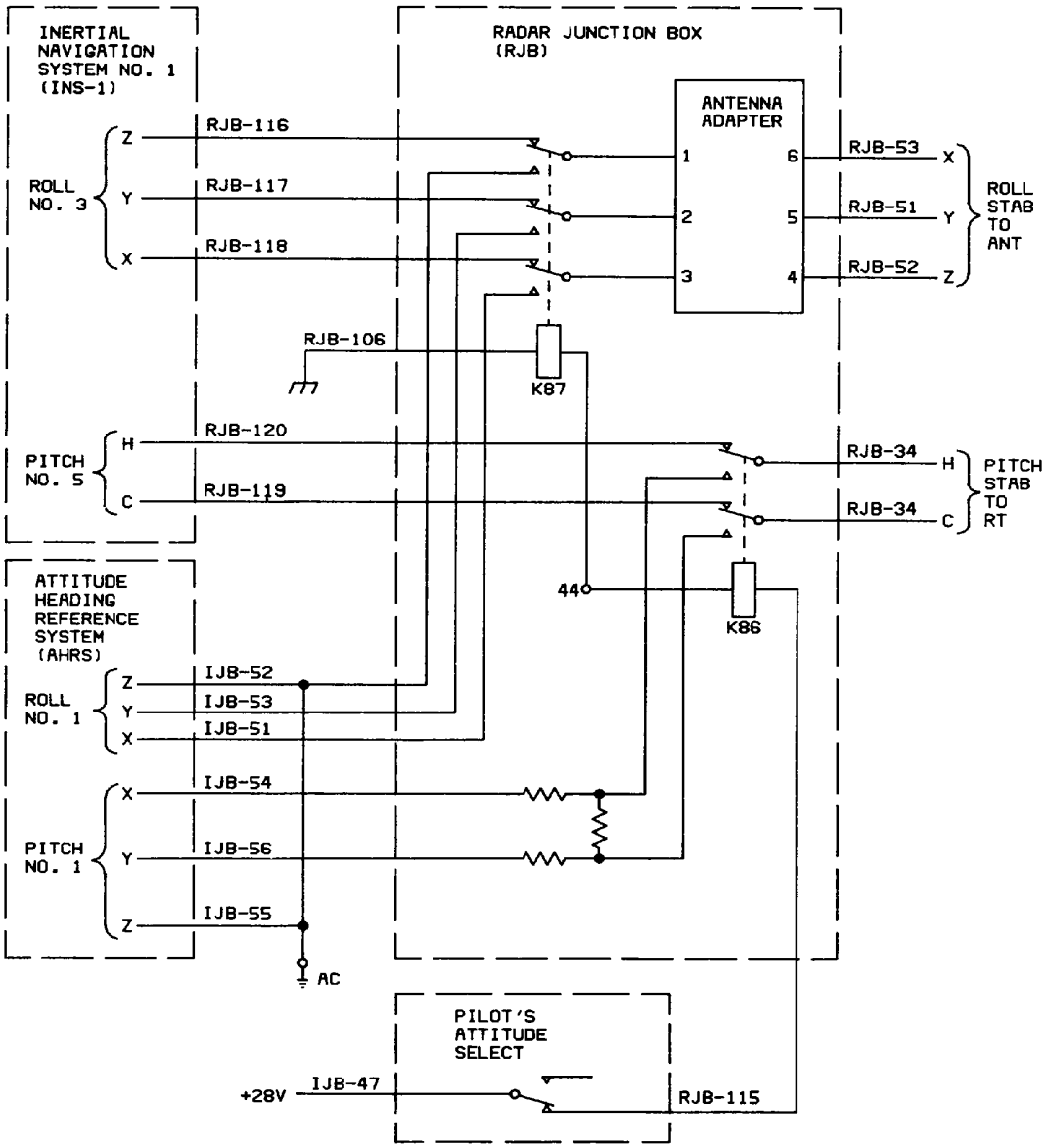

Antenna Pitch and Roll Inputs Electrical Schematic Diagram

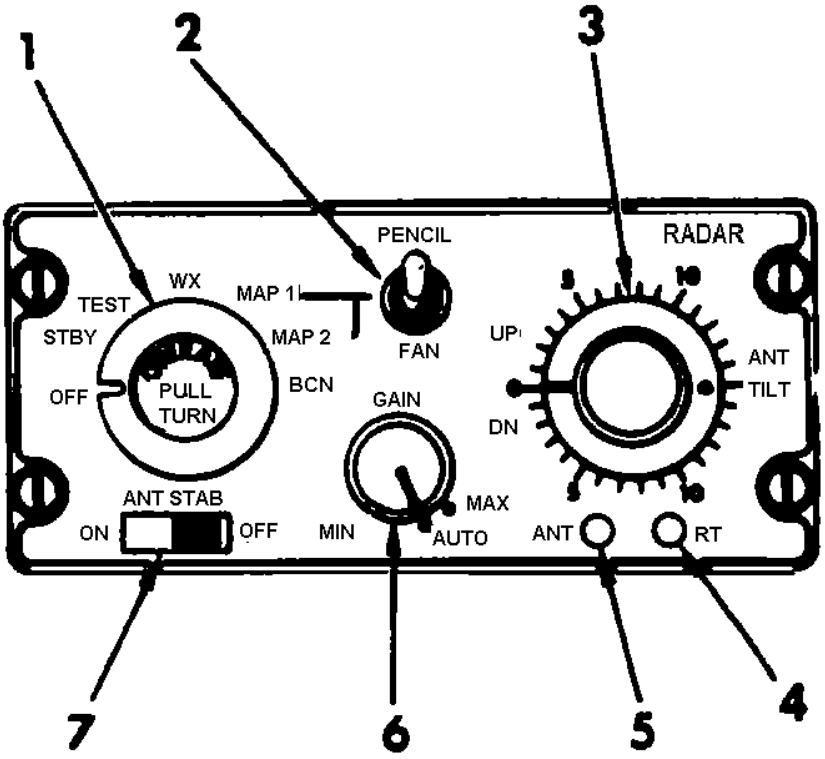

1. FUNCTION SWITCH
2. PENCIL/FAN SWITCH
3. ANTENNA TILT CONTROL
4. RT SELF TEST LIGHT
5. ANTENNA SELF-TEST LIGHT
6. GAIN CONTROL
7. ANTENNA STABILATION SWITCH

Weather Radar Control Panel

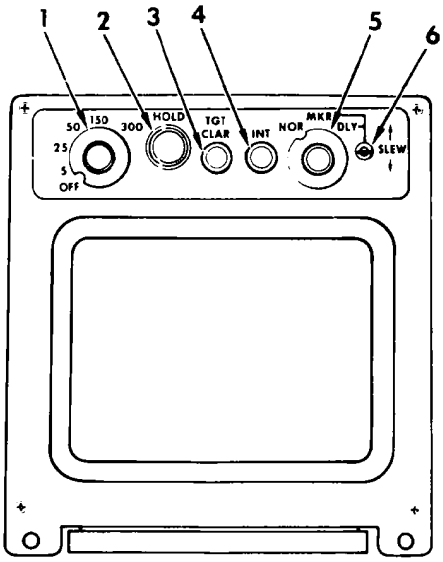

1. RANGE SWITCH
2. HOLD PUSHBUTTON
3. TGT CLAR CONTROL
4. INT CONTROL
5. NOR-MKR-DLY SWITCH
6. SLEW SWITCH

Multifunction Display

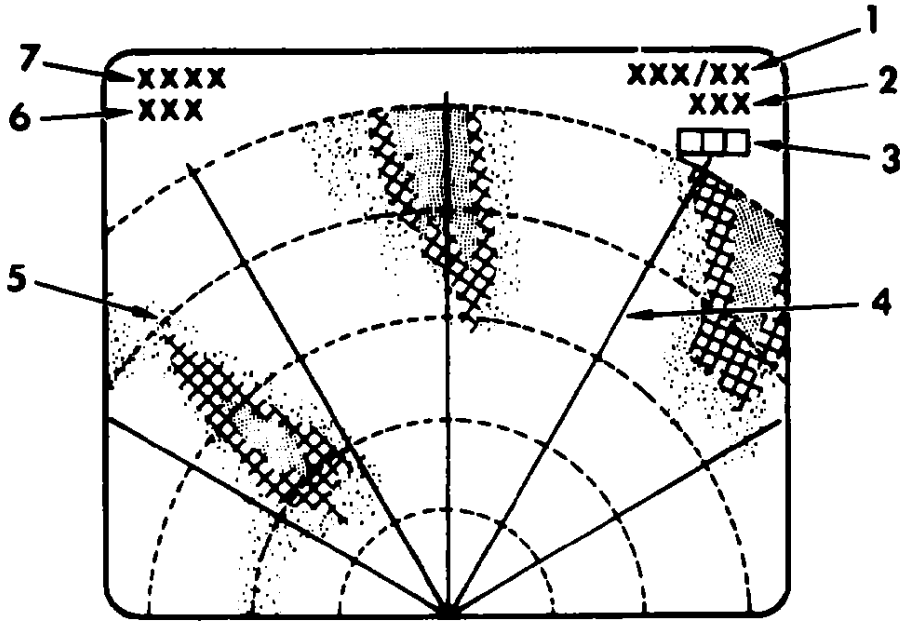

1. RANGE/MARK SCALE
2. VARIABLE RANGE MARKER POSITION/DELAY RANGE
3. VIDEO COLOR BAR
4. FIXED AZIMUTH CURSORS
5. FIVE SEGMENTED RANGE MARKS
6. DLY OR MKR
7. OPERATING MODE

Multifunction Display Presentation

Ground Proximity Warning System (GPWS)

The GPWS provides the flight crew with visual and audio warning of possibly dangerous flight paths relative to the ground. GPWS issues visual warnings via lights on the pilot's and copilot's GPWS panels. The audio warnings include synthesized voice commands heard over the GPWS loudspeaker and in the flight crew's headsets if the interphone system is on. The warning modes are active when the airplane is flying between 50 and 2450 feet above the ground. For this range of altitude, the GPWS monitors both the airplane's height and change in height (altitude rate). The system trys to predict when the airplane is too close to the ground. When a warning occurs, the flight crew must take corrective action (such as a pullup). The warning stops only when the unsafe ground proximity situation no longer exists. Some warning modes can be inhibited for special reasons (such as low-level flying). The GPWS monitors its operational status as soon as initial power is applied. If the GPWS is inoperative, the GPWS INOP annunciator on the master caution panel will come on.

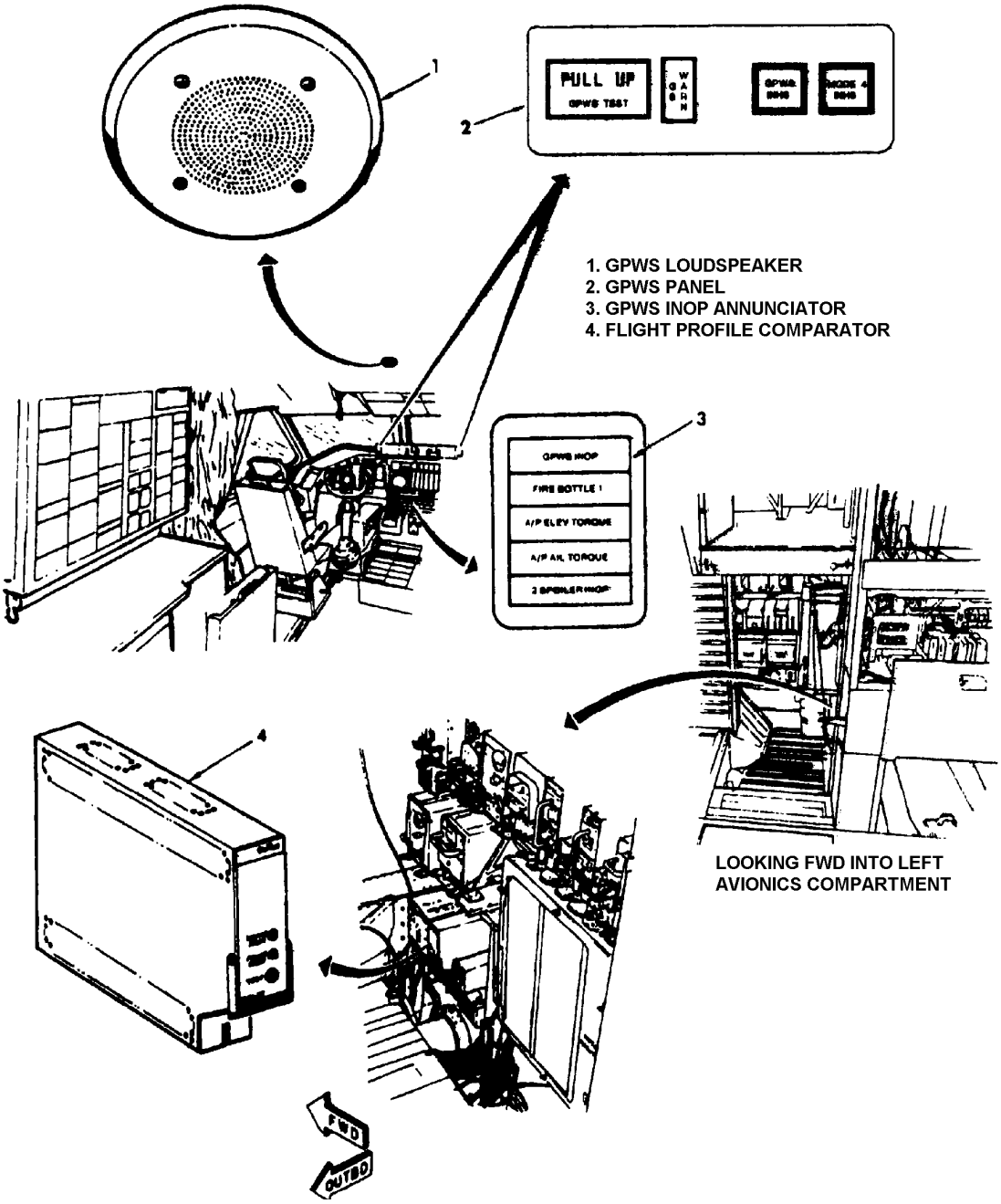

Ground Proximity Warning System Components

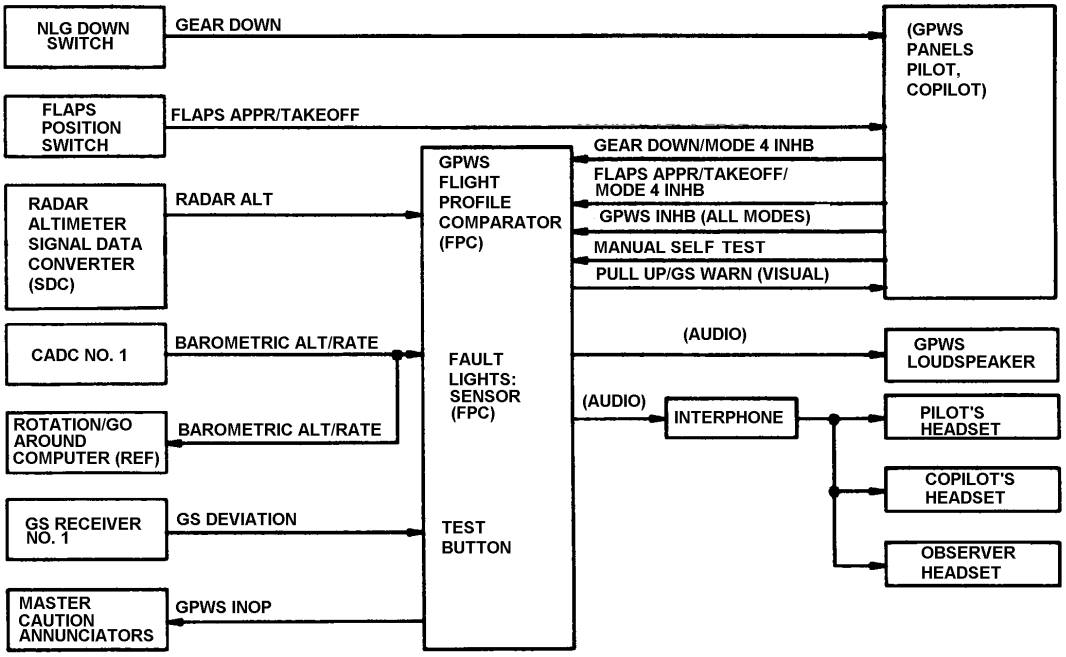

Ground Proximity Warning System Signal Flow Block Diagram

Inertial Navigation System (INS)

The INS provides a dual navigation system composed of the necessary sensors, computer processing and monitoring displays to provide precision attitude reference and accurate global navigation entirely independent of ground reference signals. Appropriate system outputs provide smooth, flyable commands to the pilot, copilot, and autopilot. The fundamental ability employed in the system to accomplish the navigation function is the sensing and measurement of acceleration. Each INS consists of one navigation unit (NU), mode selector unit (MSU), battery unit (BU), fuel savings advisory system/inertial navigation system control and display unit (FSAS/INS CDU) on the center console , a second INS control and display unit (INS CDU) at the navigator's station, an alternate control display unit at pilot's station (supplied by FSAS/INS CDU), and an INS mount assembly consisting of an avionics rack, navigation unit blower fan, and air flow sensor.

The navigation unit includes a precision, gyro-stabilized platform on which acceleration sensors (accelerometers) are mounted along with a digital computer which performs navigation computations. Each INS calculates and monitors track, ground speed, heading, drift angle, wind direction, velocity, and position (latitude and longitude). Insertion of the desired flight plan provides the system with information necessary to compute flight plan related information, such as desired track, cross track distance, track angle error and distance and time to the next waypoint (a point on the earth to be over-flown). All of this information can be called up and displayed on the control and display unit (CDU). In addition to performing primary navigation functions, an INS is also a source for: enroute steering signals for the automatic flight control system (AFCS) (autopilot), driving signals for flight instruments (HSI, ADI, BDHI), air drop calculations, and navigation information to FSAS for display on multifunction display(s).

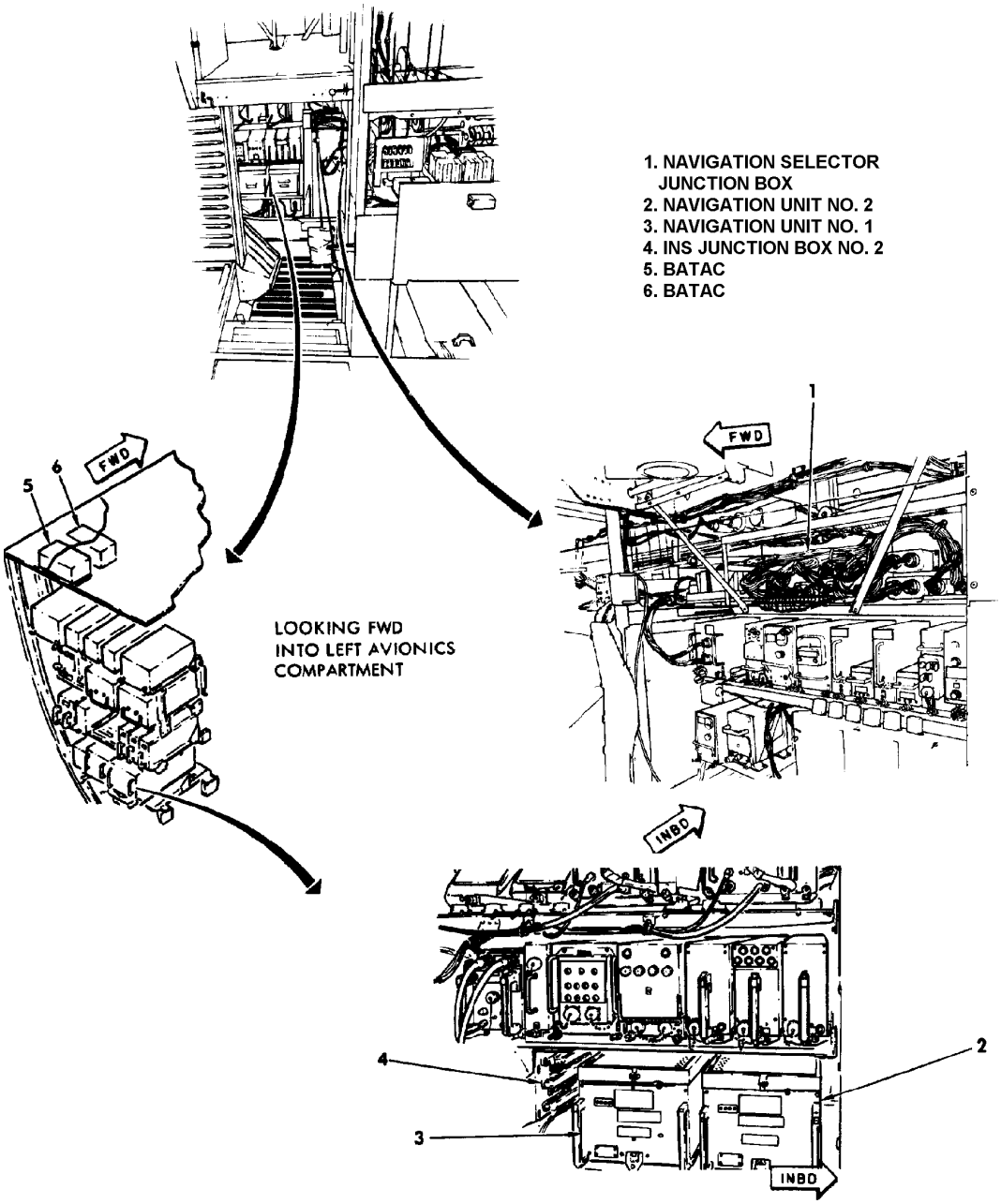

INS Components (Sheet 1 of 4)

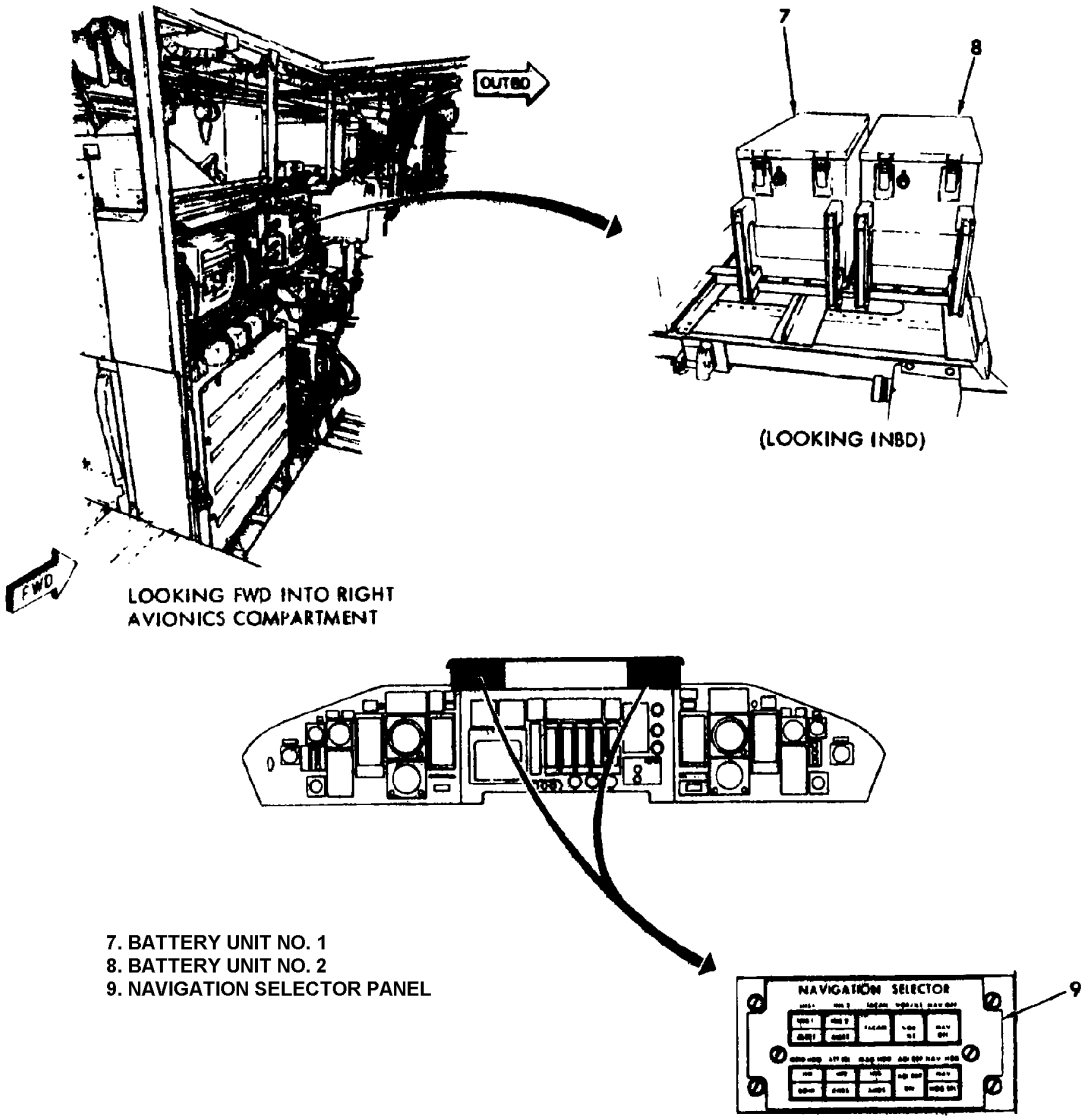

7. BATTERY UNIT NO. 1
8. BATTERY UNIT NO. 2
9. NAVIGATION SELECTOR PANEL

INS Components (Sheet 2 of 4)

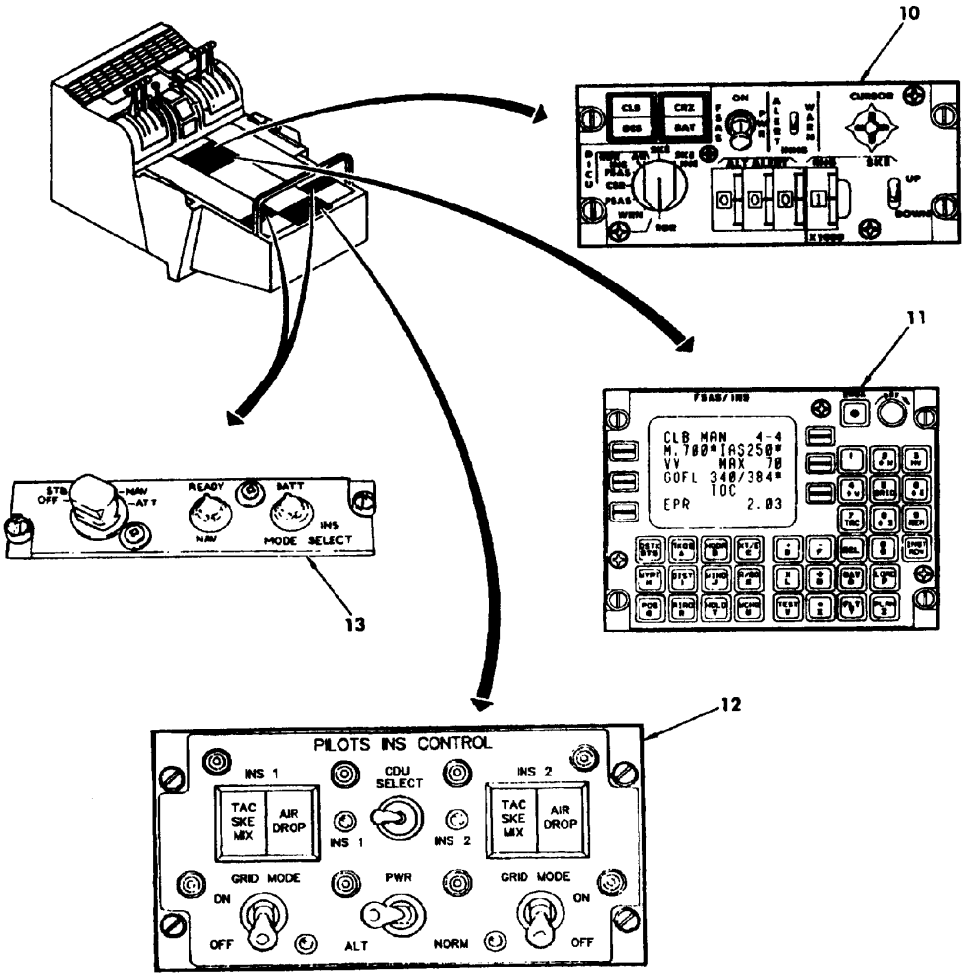

10. DISPLAY INTERFACE AND CONTROL UNIT (DICU)
11. CONTROL AND DISPLAY UNIT (FSAS/INS CDU)
12. PILOT'S INS CONTROL UNIT (PICU)
13. MODE SELECTOR UNIT (MSU)

INS Components (Sheet 3 of 4)

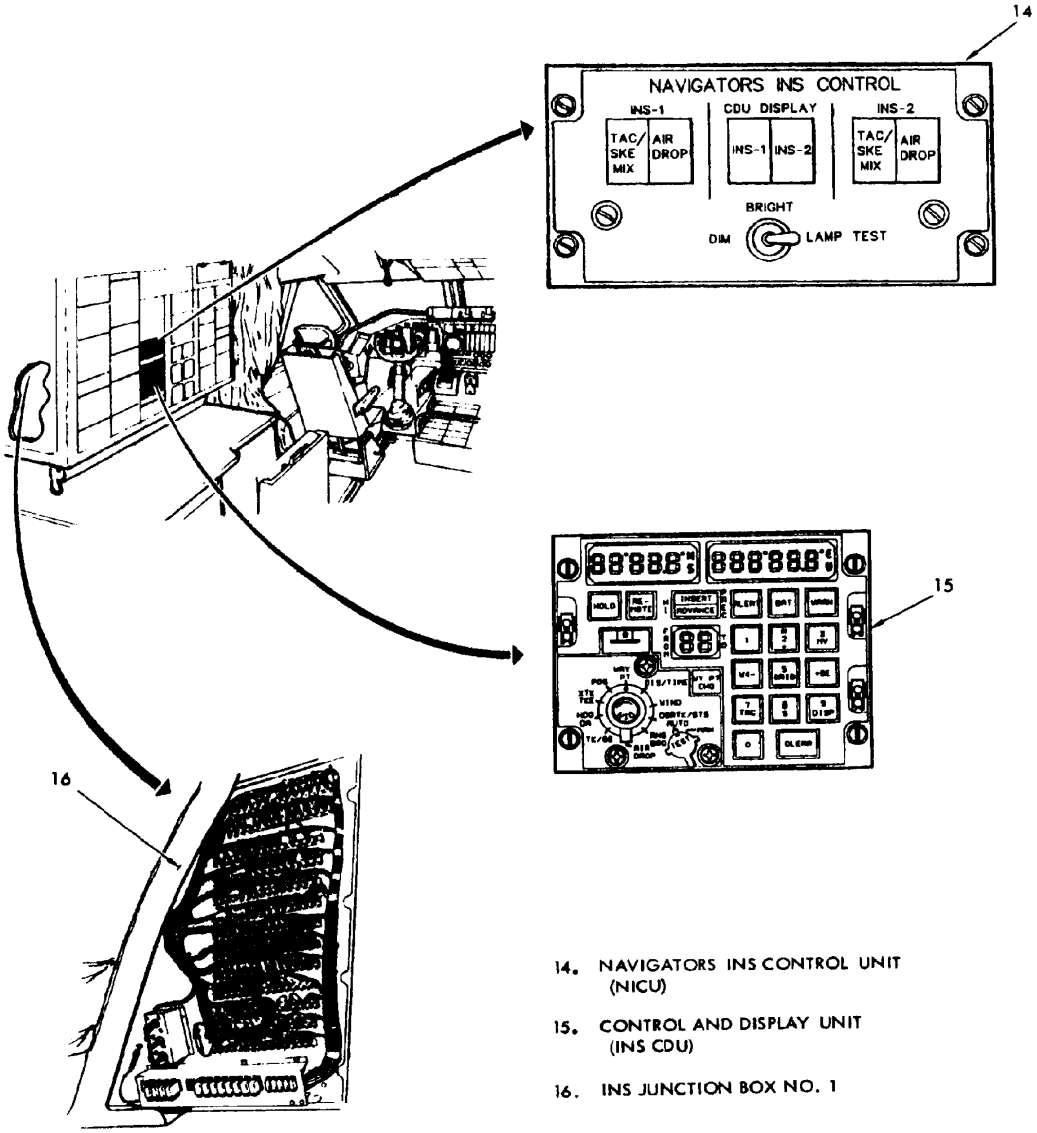

14. NAVIGATORS INS CONTROL UNIT (NICU)

15. CONTROL AND DISPLAY UNIT (INS CDU)

16. INS JUNCTION BOX NO. 1

INS Components (Sheet 4 of 4)

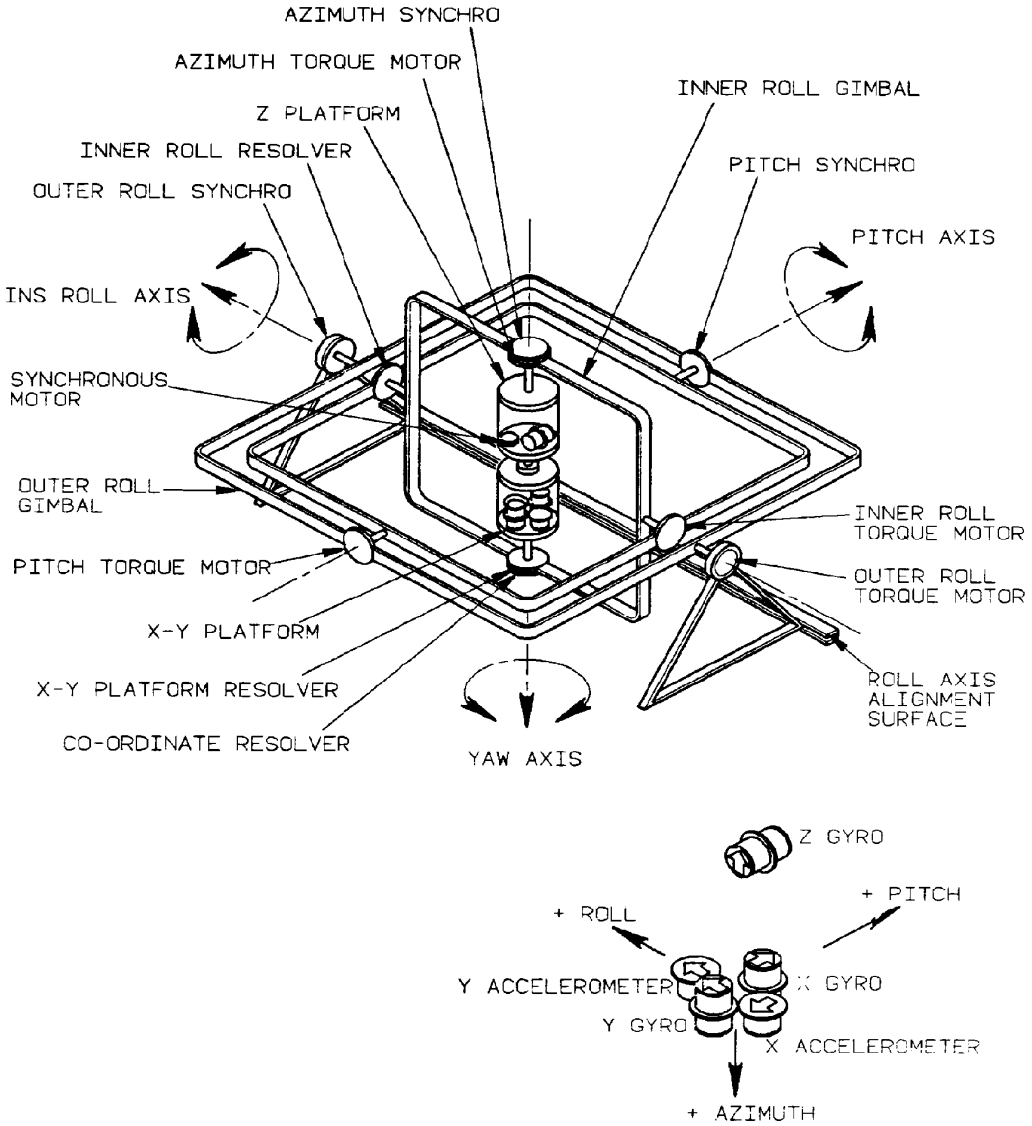

Inertial Platform

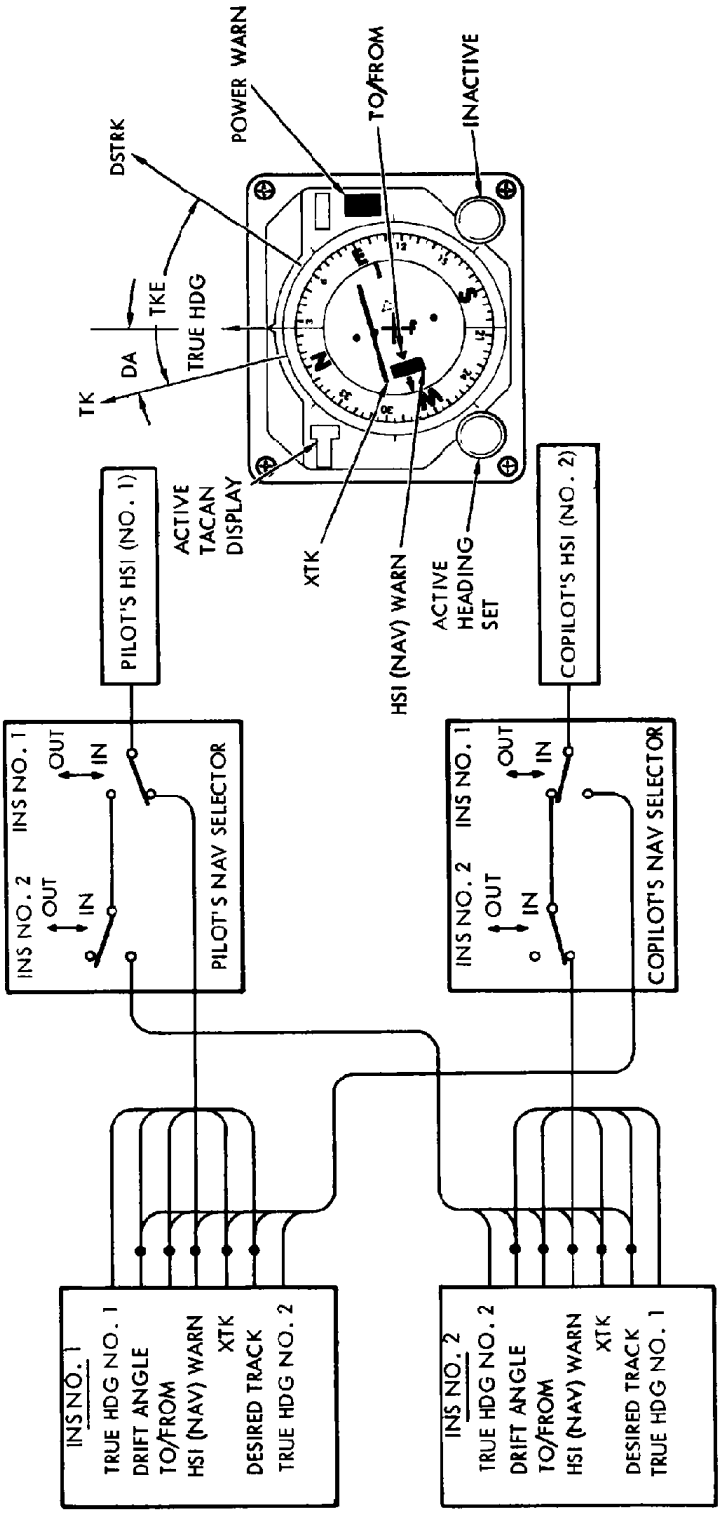

HSI Interface

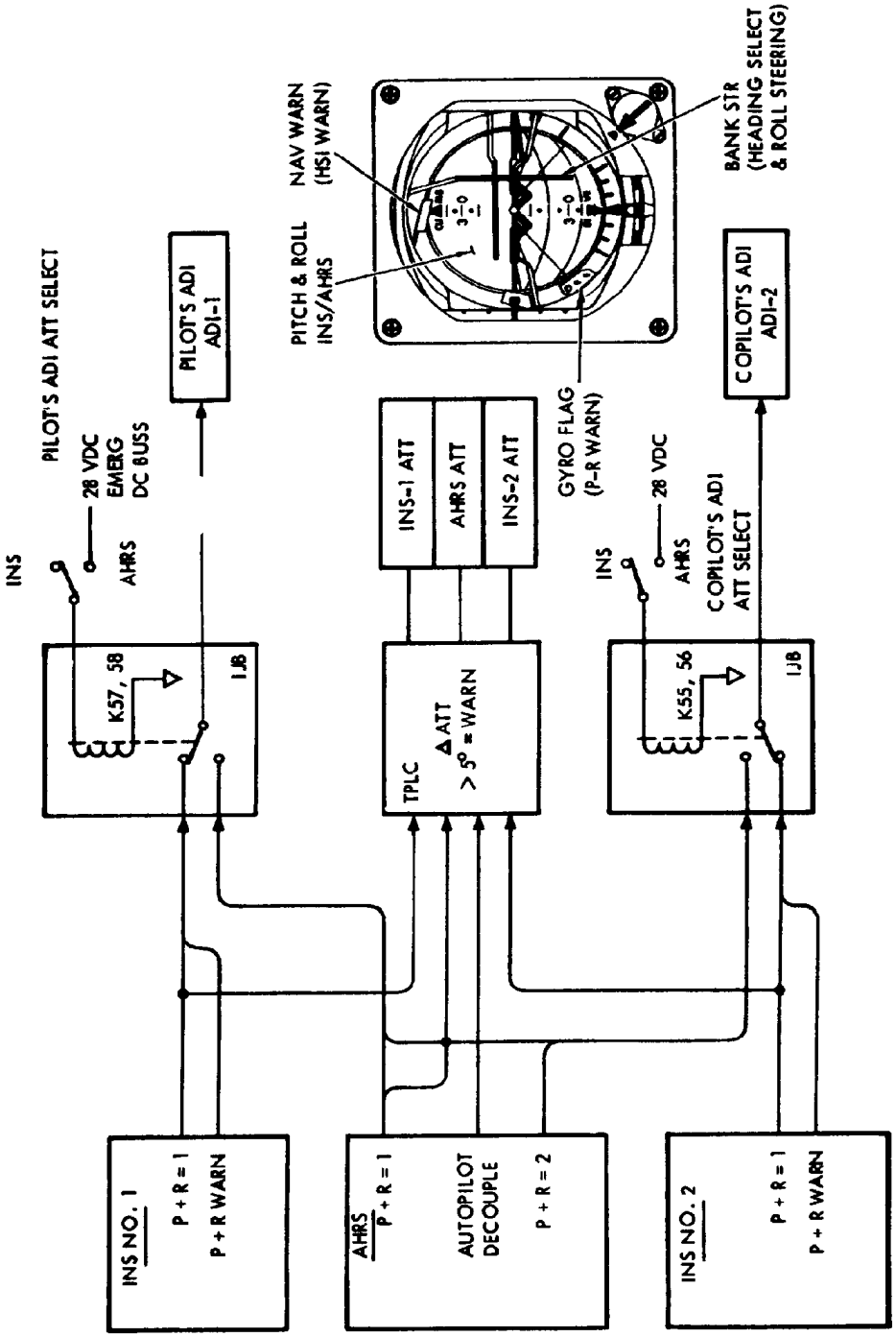

Attitude Interface

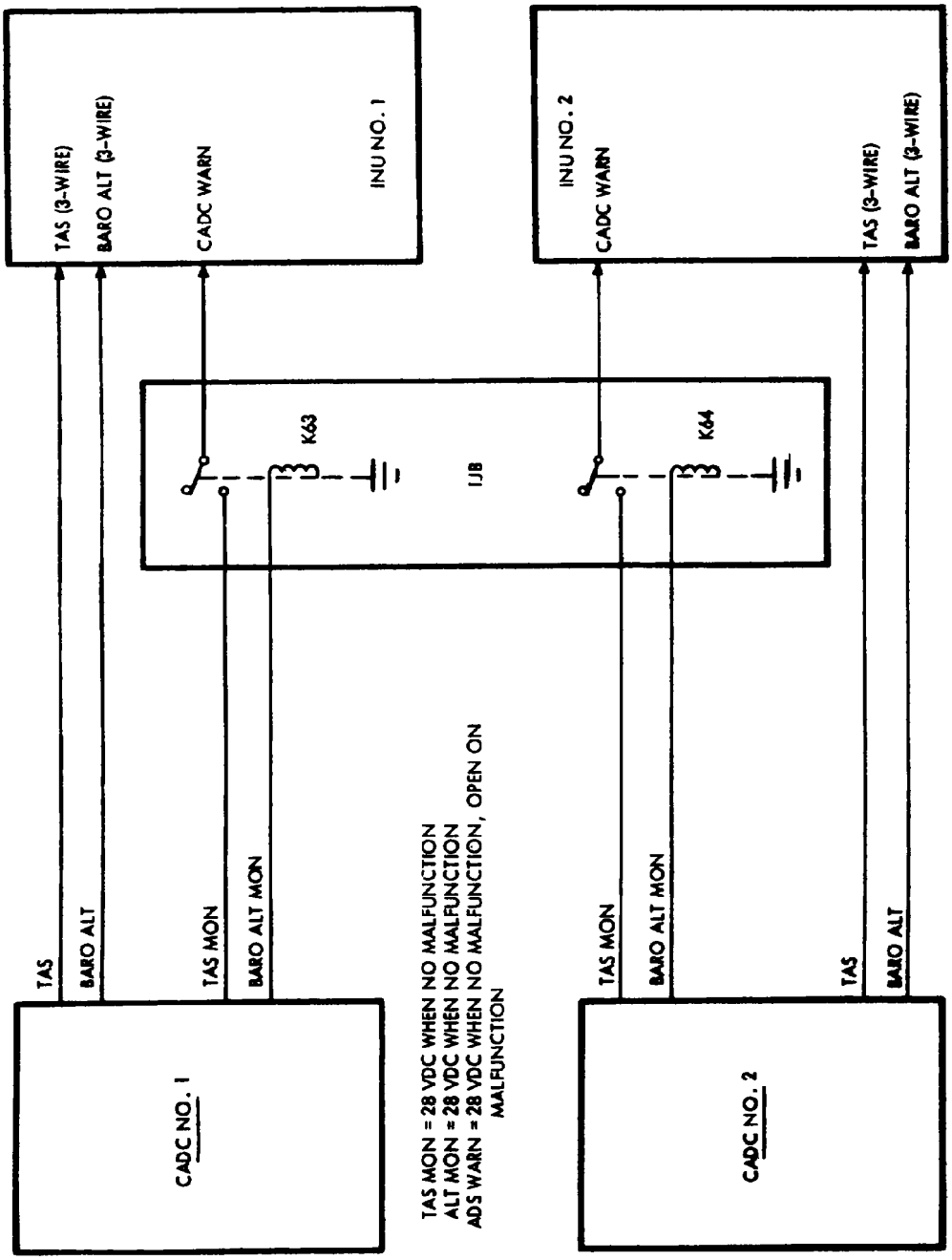

CADC Interface Functional Diagram

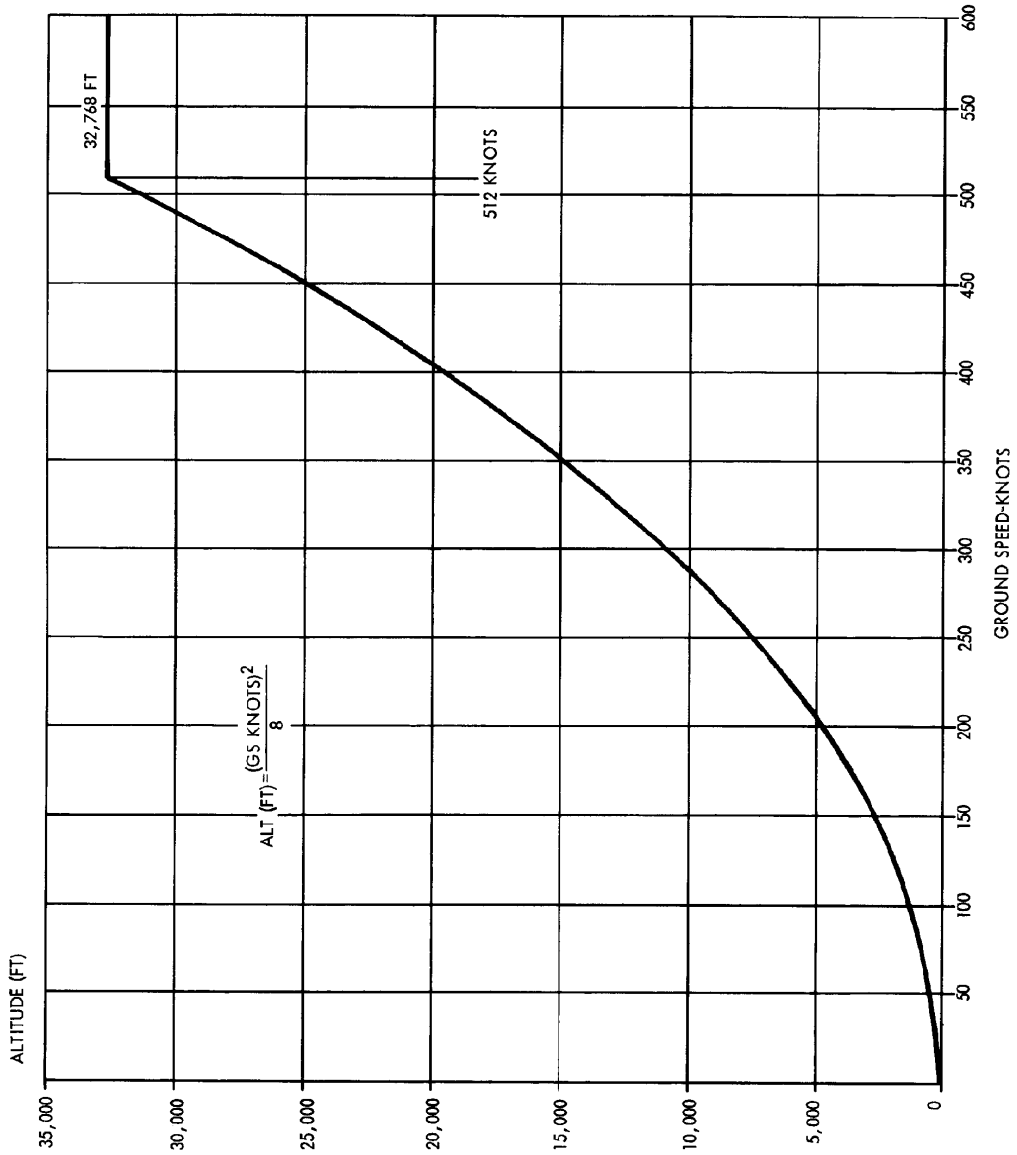

C-141 Canned Altitude Profile

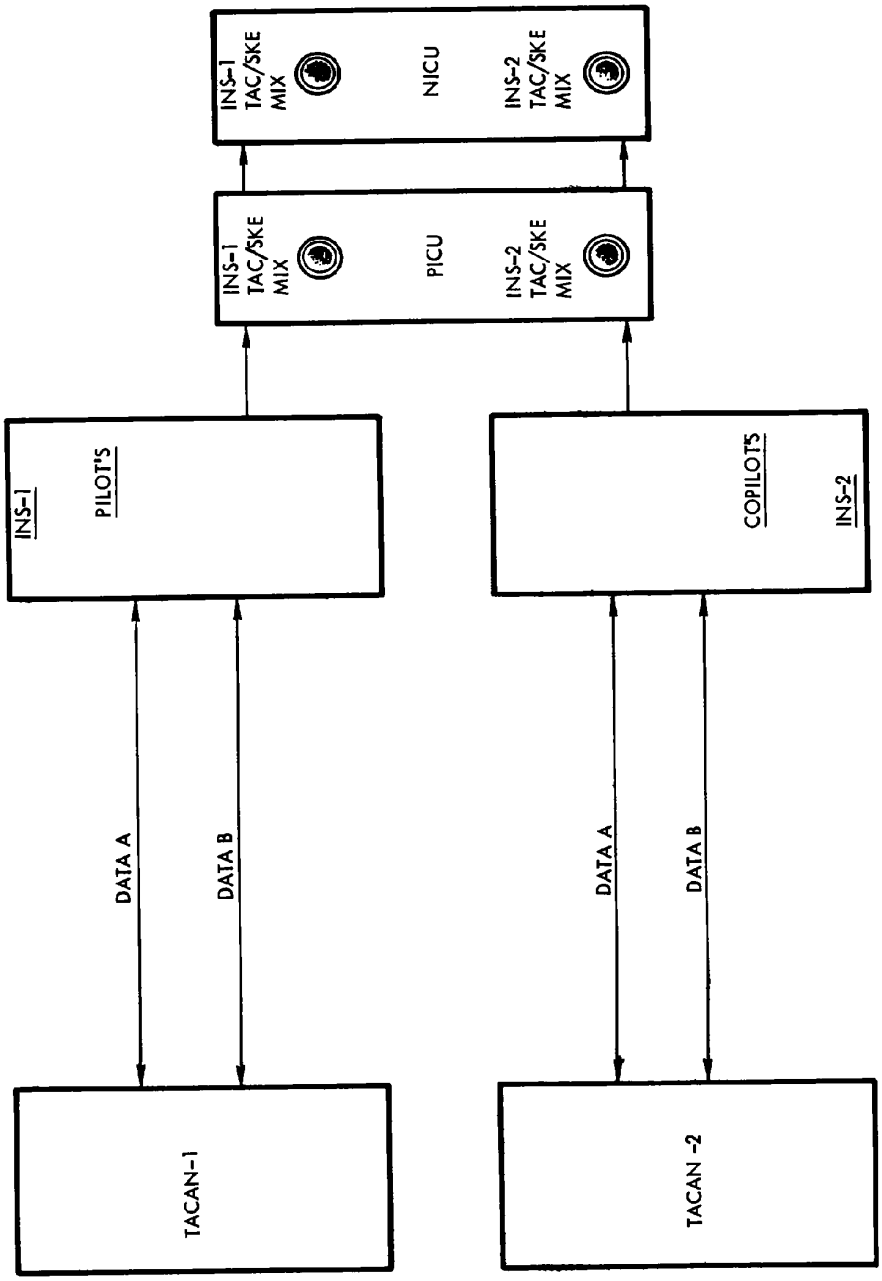

TACAN/INS Interface

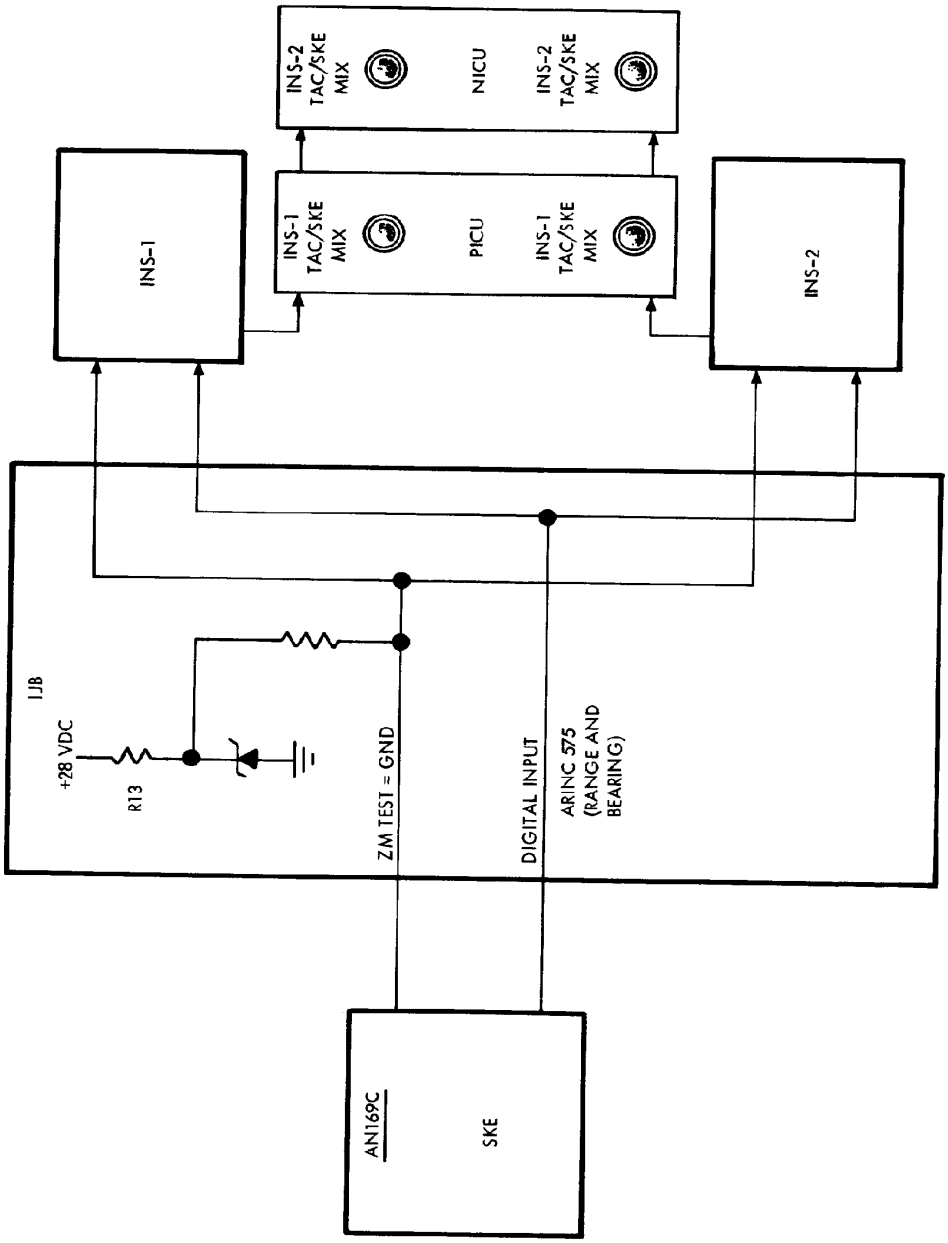

SKE/INS Interface

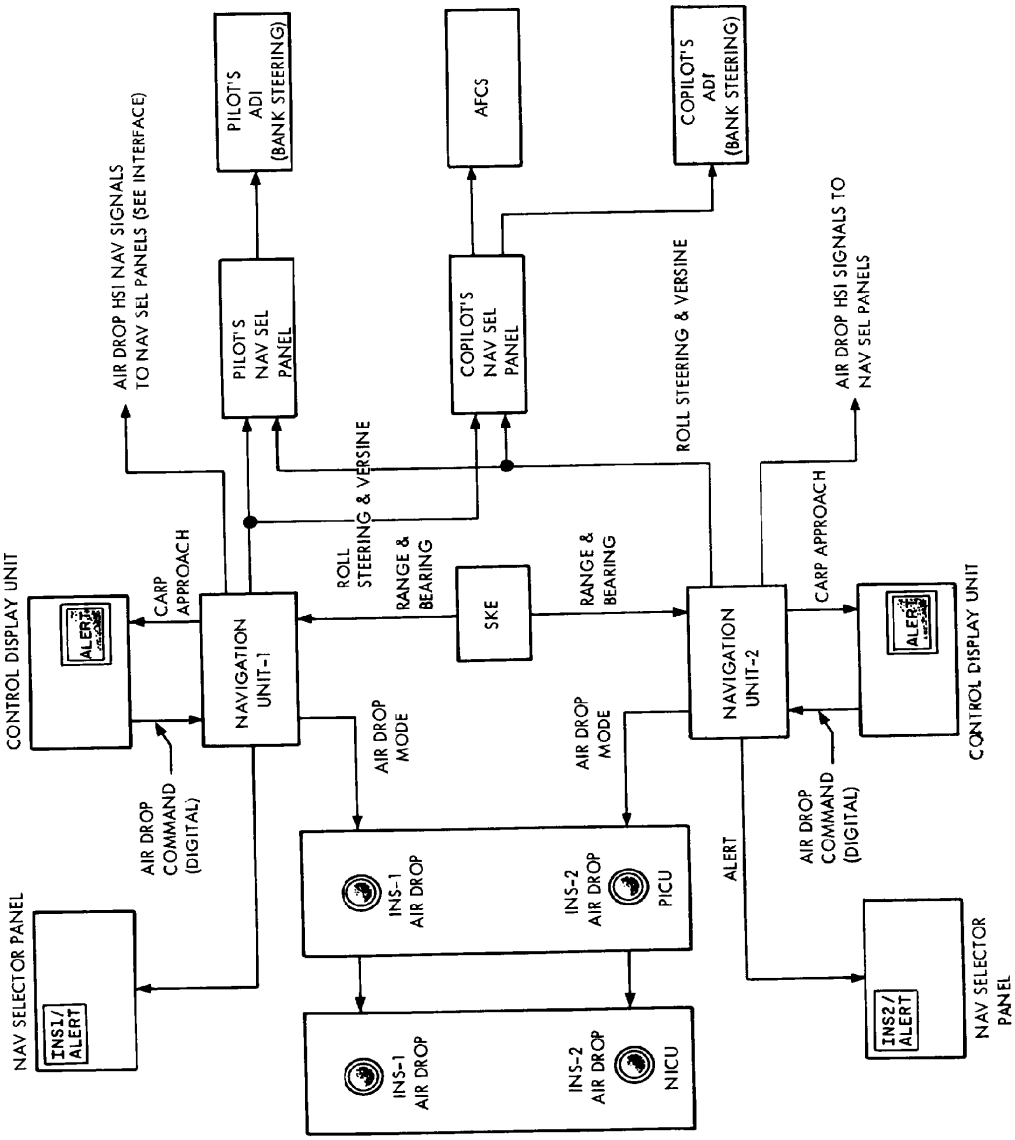

Air Drop Interface

INS COMPUTED AIR RELEASE DATA						DATE
NAVIGATOR				SIGNATURE		
ORGANIZATION			DROP ZONE		AIRCRAFT IDENTIFICATION	
PILOT				FORMATION POSITION		
ITEM	AIR DROP DATA		CDU T-WHEEL NO.	PREFLIGHT		ACTUAL	
				LEFT DISP	RIGHT DISP	LEFT DISP	RIGHT DISP
1	DZ ALT SET (in of Hg)		0				
2	TEMPERATURE (°C)		1				
3	RATE OF FALL (ft/s)		1				
4	PI ALTITUDE (ft)		2				
5	VERTICAL DIST (ft)		3				
6	TIME OF FALL CONSTANT (s)		3				
7	MEW SPEED (kt)		4				
8	MEW ANGLE (°)		4				
9	A/C ALTITUDE (ft)		5				
10	FWD TRAVEL TIME (s)		5				
11	BCN ONLY	AL TR DIST (yd)	6				
12		CR TR DIST (yd)	6				
13		ALTITUDE (ft)	7				

INS Air Drop Data Form

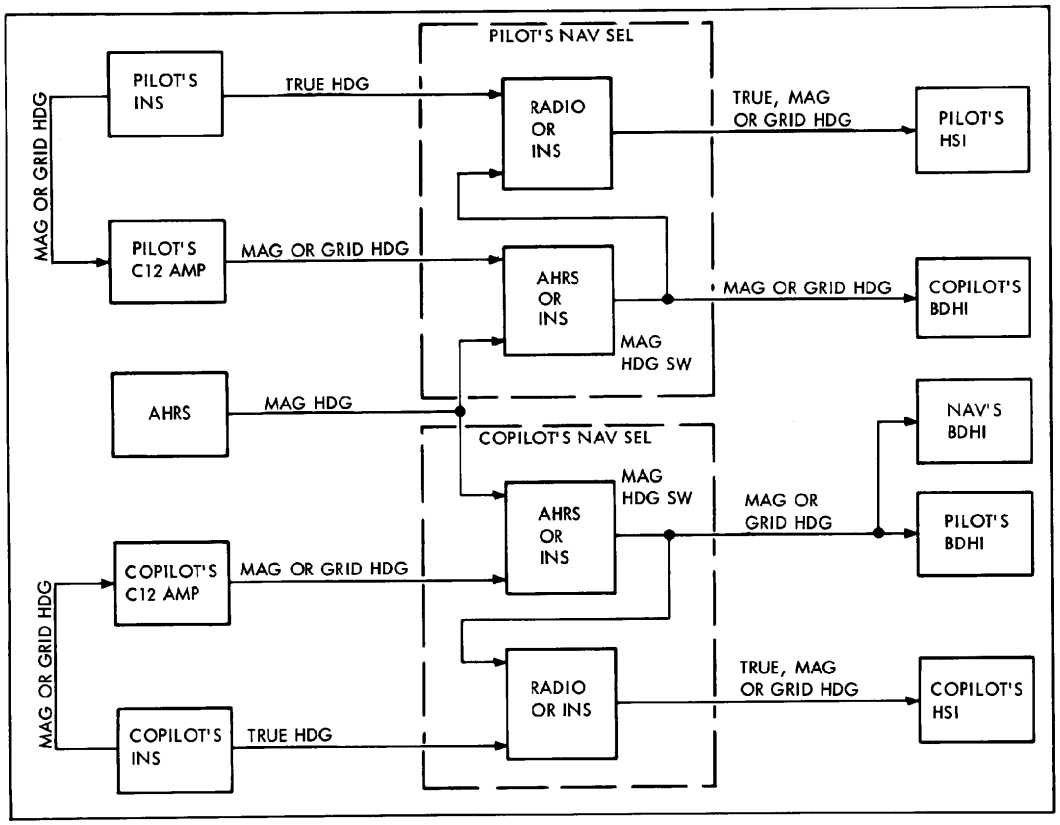

Heading Selection and Distribution

NAV STATUS	MALF. ACTION	CODE CODE	BLANK	ALIGN'T STATUS	COMPUTER MODE

RIGHT SIDE DATA DISPLAY

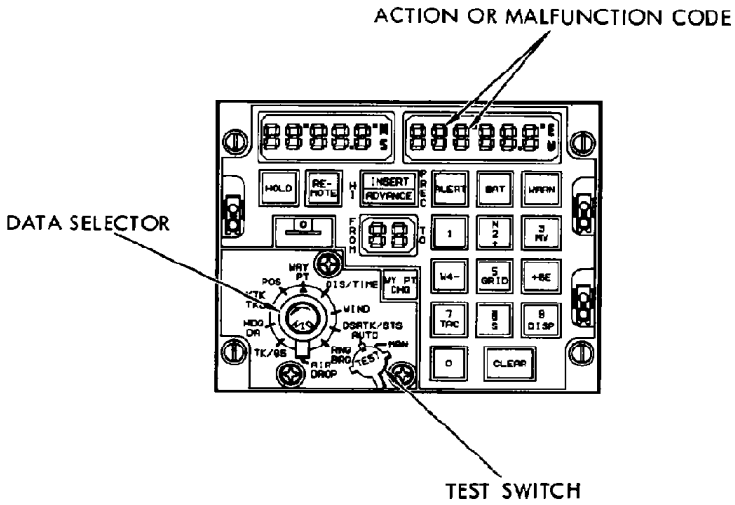

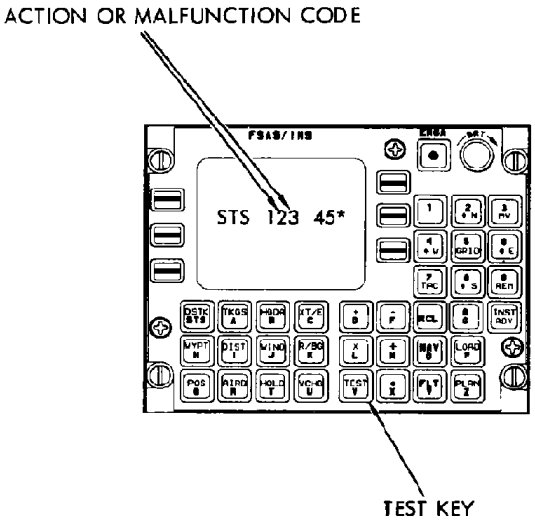

CDU Malfunction Monitor

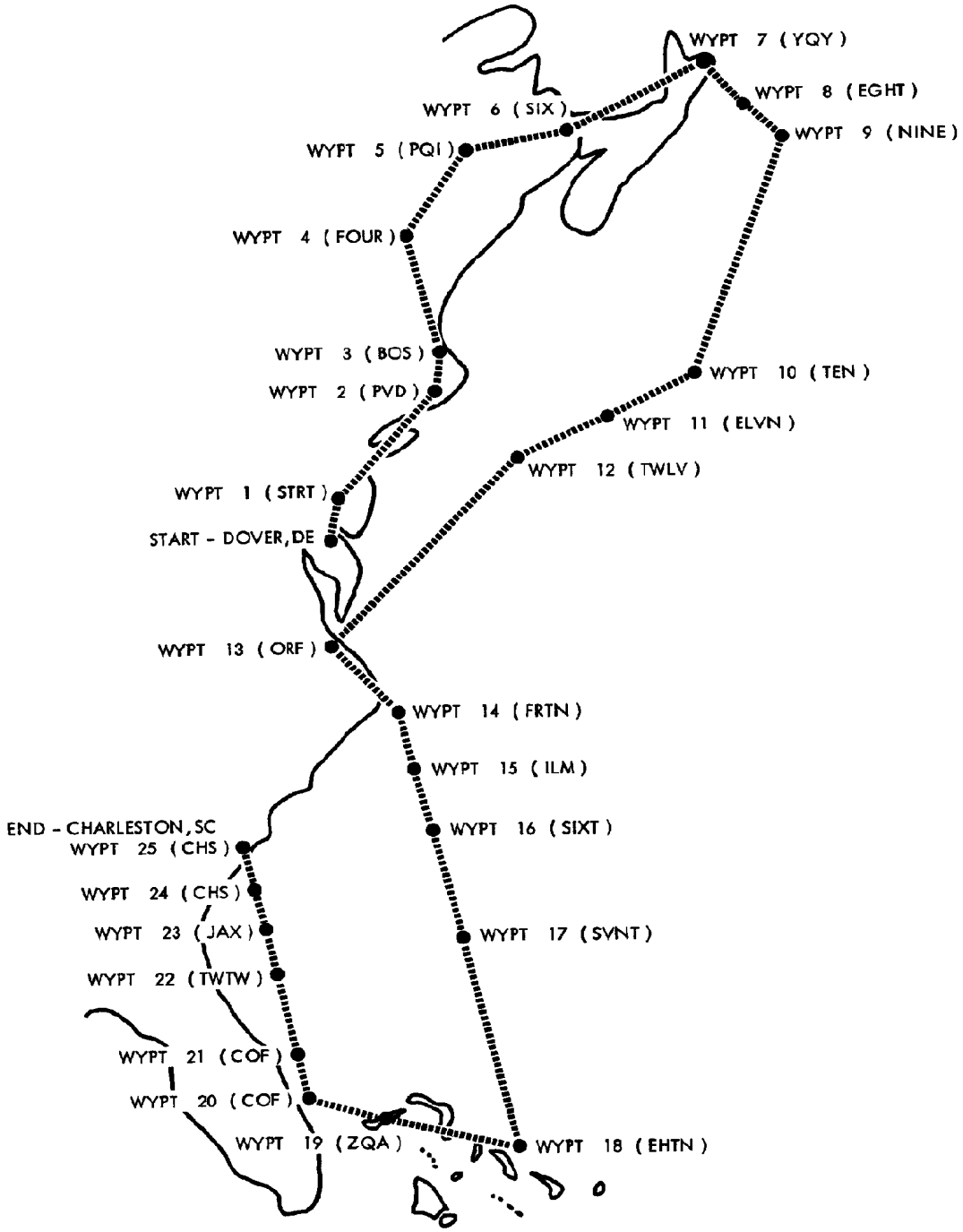

Simulated Flight Plan

Automatic Direction Finder (ADF) System

The ADF provides the flight crew with a radio aid for information and navigation. The ADF is a radio receiving system which can be tuned to stations broadcasting in the frequency range of 190 to 1750 KHz. The ADF can receive amplitude modulated (AM), continuous wave (CW) or unmodulated carrier signals. Many types of stations operate in this range, including ground beacon stations, radio range stations, weather stations, and standard AM radio stations. The ADF can also be used as a radio compass with automatic and manual direction finding. The relative bearing (angle) between airplane heading and selected station is displayed at the pilot's, copilot's, and navigator's positions on BDHIs . Bearing information may be used to direct the airplane to a station (homing), or to provide a fix of airplane position. When the bearings of two or more stations are taken, the position of the airplane can be found by triangulation on a navigation map. The airplane has two complete systems called the No. 1 and No. 2 ADF systems.

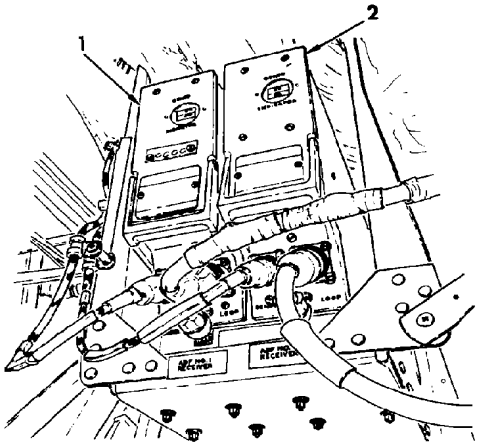

(LOOKING UP AND FWD)

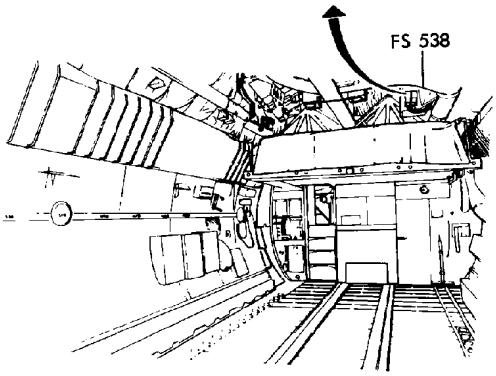

(CARGO COMPARTMENT LOOKING FWD)

1. NO. 1 ADF RECEIVER
2. NO. 2 ADF RECEIVER
3. ADF CONTROL PANEL
4. LOOP L-R SWITCH
5. VOICE-CW SWITCH
6. TUNING KNOB
7. BAND SELECTOR SWITCH
8. FREQUENCY DIAL
9. FUNCTION SELECTOR SWITCH
10. VOLUME CONTROL
11. TUNING METER

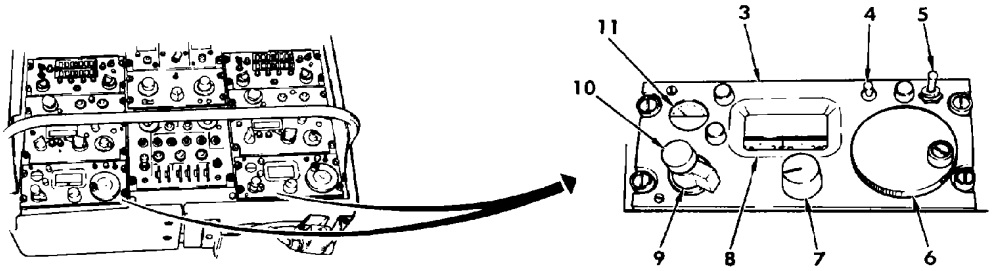

(CENTER CONSOLE)

Automatic Direction Finder System Components (Sheet 1 of 2)

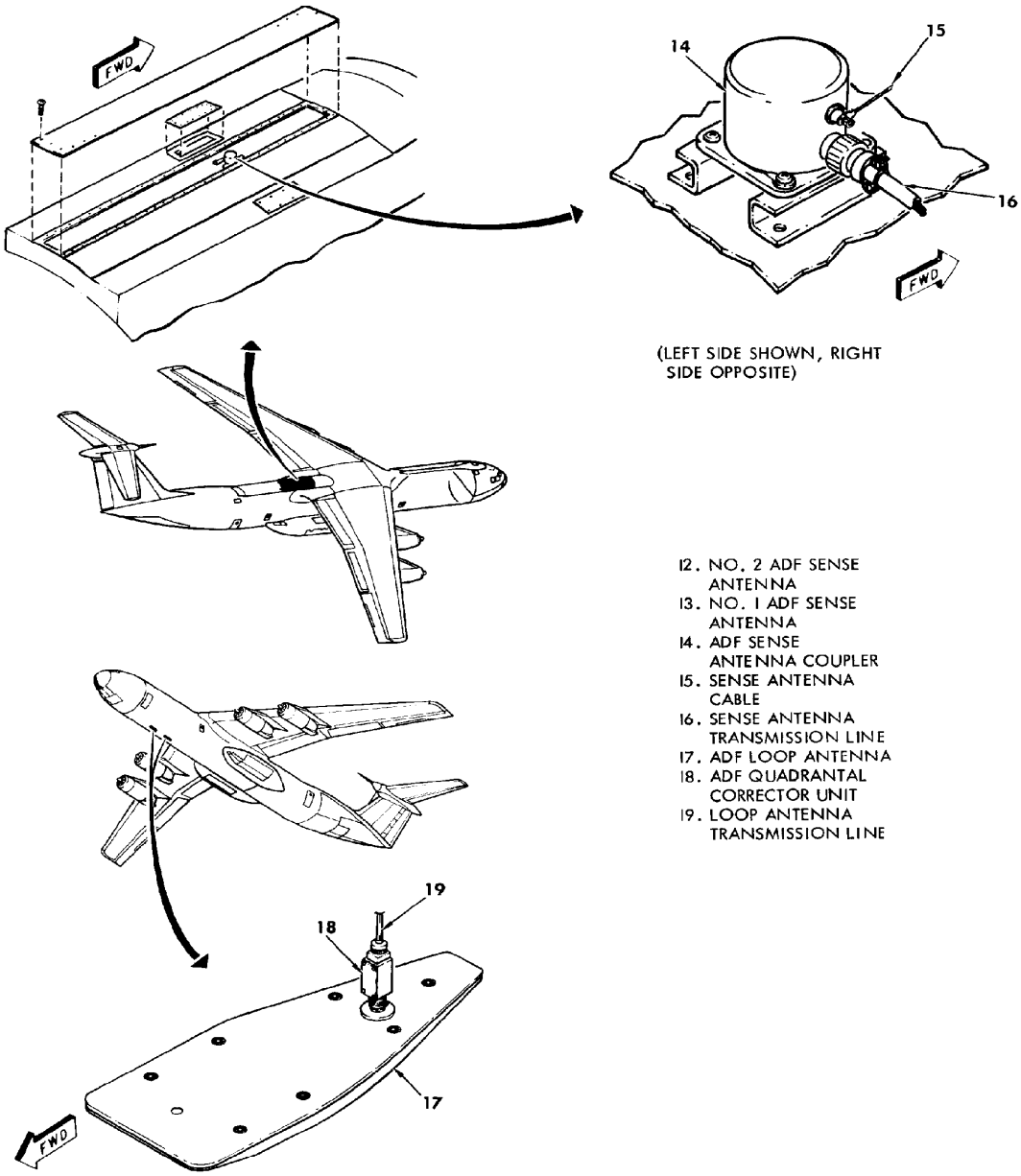

Automatic Direction Finder System Components (Sheet 2 of 2)

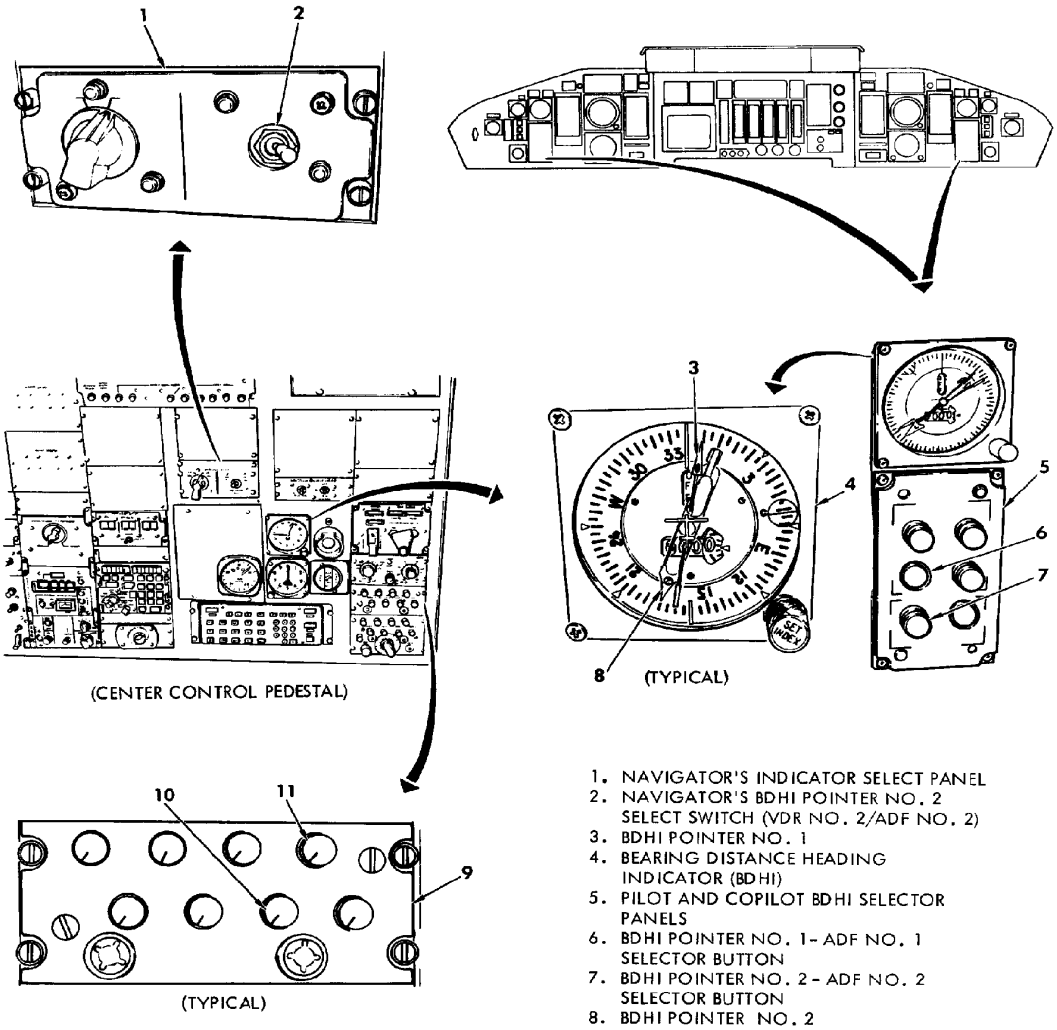

1. NAVIGATOR'S INDICATOR SELECT PANEL
2. NAVIGATOR'S BDHI POINTER NO. 2 SELECT SWITCH (VDR NO. 2/ADF NO. 2)
3. BDHI POINTER NO. 1
4. BEARING DISTANCE HEADING INDICATOR (BDHI)
5. PILOT AND COPILOT BDHI SELECTOR PANELS
6. BDHI POINTER NO. 1- ADF NO. 1 SELECTOR BUTTON
7. BDHI POINTER NO. 2 - ADF NO. 2 SELECTOR BUTTON
8. BDHI POINTER NO. 2
9. INTERPHONE CONTROL PANEL (TYPICAL)
10. INTERPHONE ADF NO. 2 CONTROL
11. INTERPHONE ADF NO. 1. CONTROL

Automatic Direction Finder System Related Components

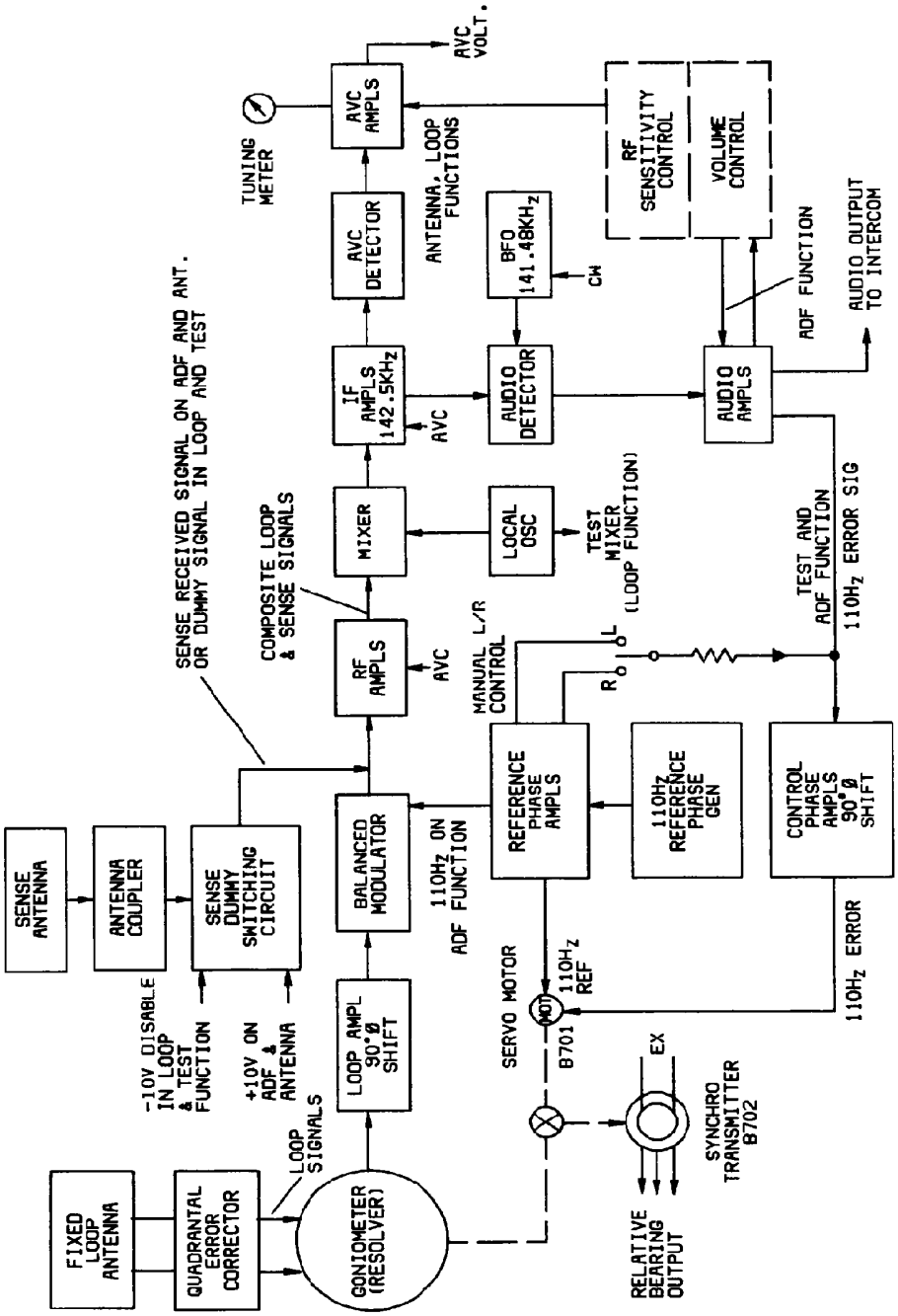

ADF Receiver Functional Block Diagram

Very High Frequency (VHF) Navigation System

The VHF navigation system provides the airplane with bearing information to selected ground stations. The VHF navigation system provides the flight crew with a radio aid for VHF omni-range (VOR) and receiver localizer (LOC). VOR information is used as a navigational aid during cross-country flights. LOC information is used to provide lateral guidance information as part of the instrument landing system (ILS). The VOR/ILS signals are also used as autopilot and flight director system inputs to direct airplane flight. The airplane has two separate and identical systems called VHF navigation systems. The No.2 VHF NAV receiver provides VOR and LOC displacement for the auto-pilot in AWLS autopilot system. LOC displacement signals from both VHF NAV receivers are desensitized by the autopilot coupler.

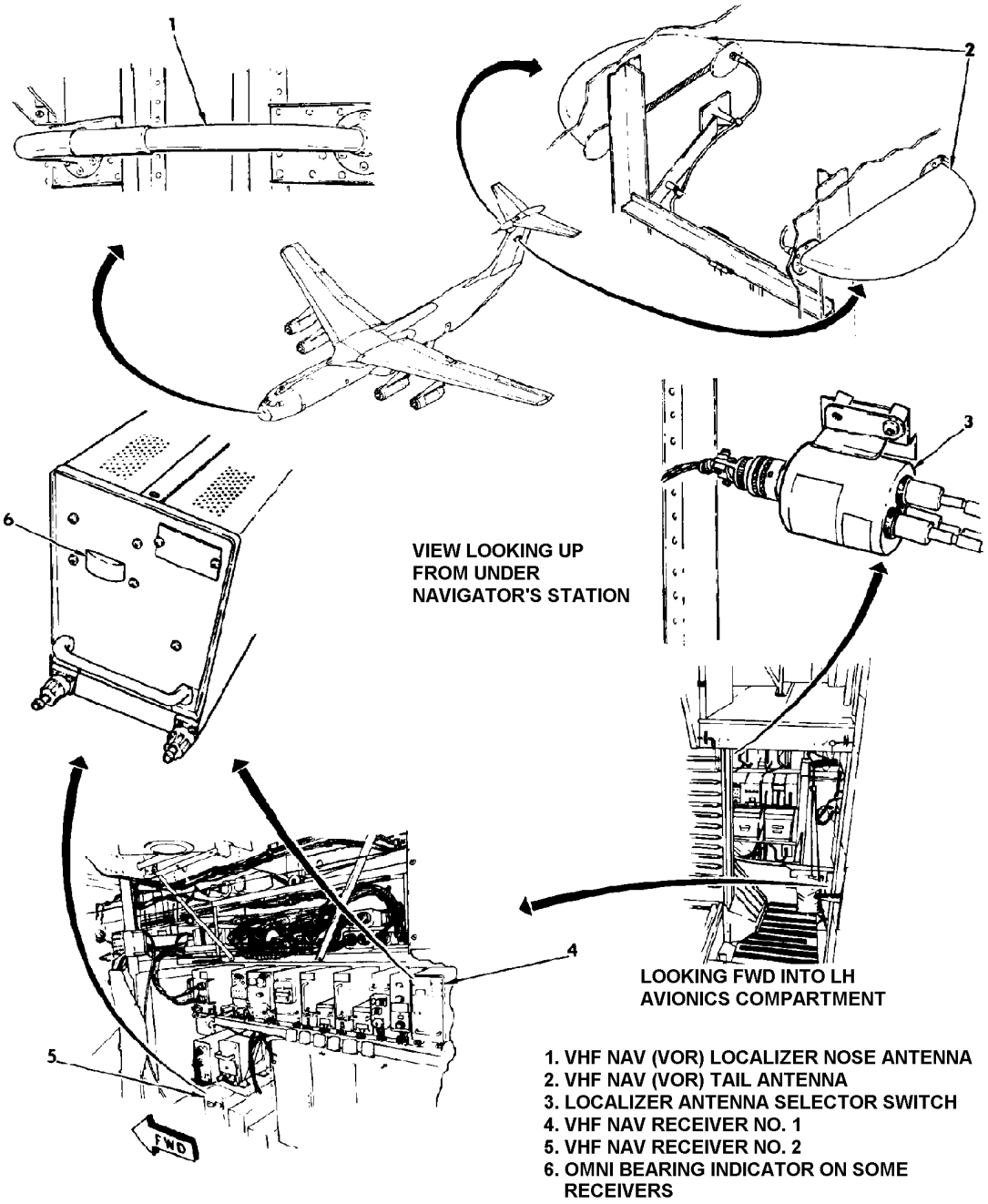

VHF Navigation System Components (Sheet 1 of 2)

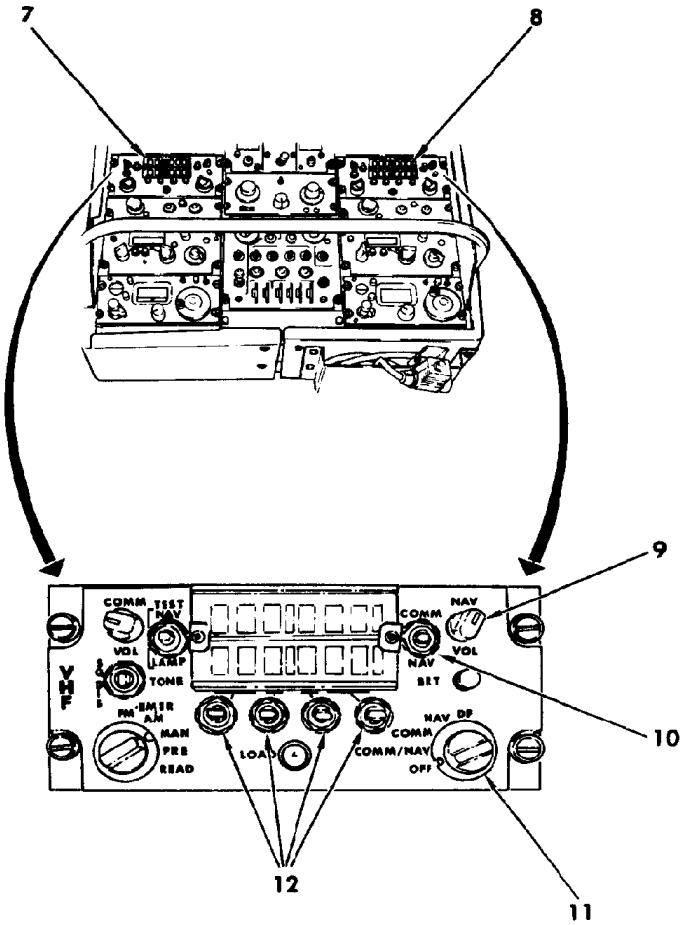

7. VHF COMM/NAV CONTROL PANEL No. 1
8. VHF COMM/NAV CONTROL PANEL No. 2
9. VHF NAV VOLUME CONTROL
10. VHF COMM/NAV DISPLAY SELECT SWITCH
11. VHF COMM/NAV MODE SELECT SWITCH
12. FREQUENCY SLEW SWITCHES

VHF Navigation System Components (Sheet 2 of 2)

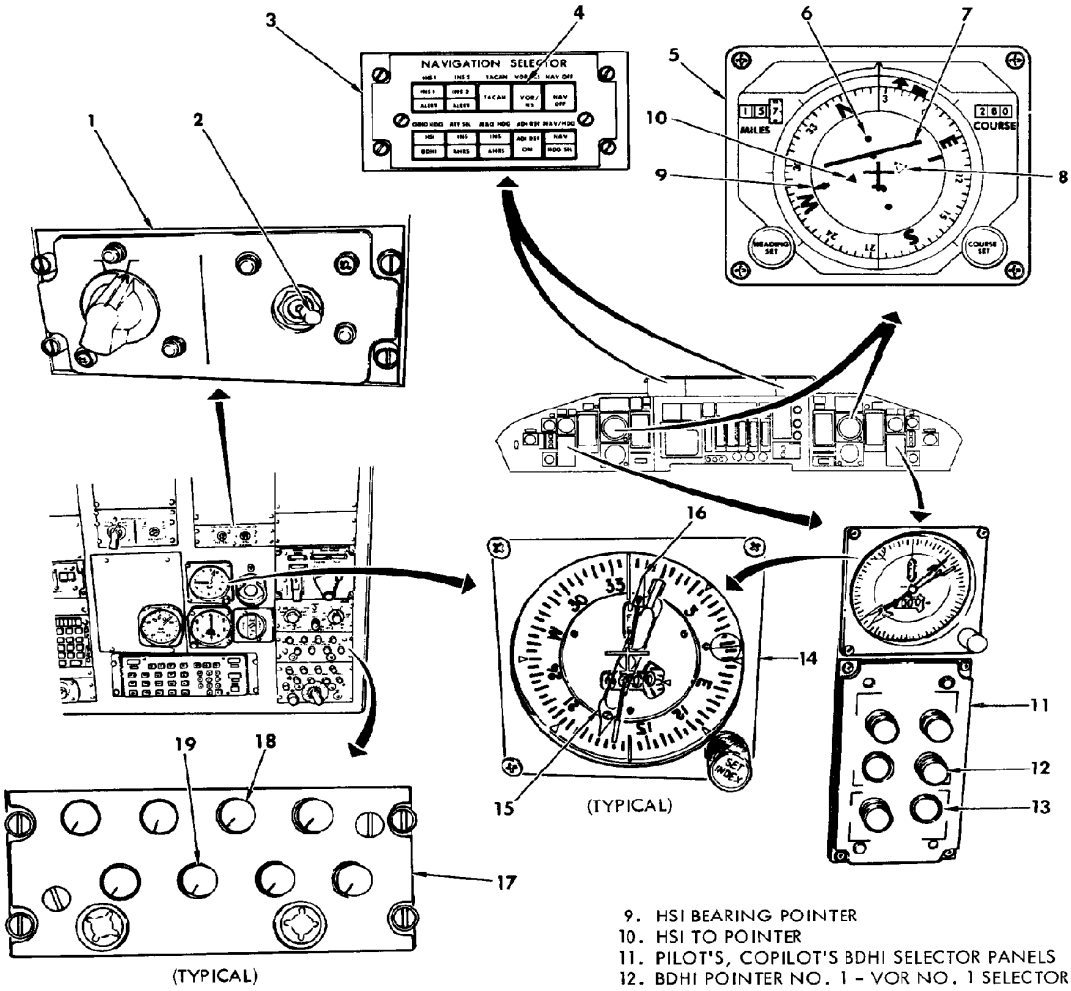

1. NAVIGATOR'S INDICATOR SELECT PANEL
2. NAVIGATOR'S BDHI POINTER NO.2 SELECT
3. PILOT'S, COPILOT'S NAVIGATION SELECTOR PANEL
4. VOR/ILS SWITCH
5. PILOT'S, COPILOT'S HSI
6. HSI HORIZONTAL DEVIATION SCALE
7. HSI HORIZONTAL DEVIATION BAR
8. HSI FROM POINTER
9. HSI BEARING POINTER
10. HSI TO POINTER
11. PILOT'S, COPILOT'S BDHI SELECTOR PANELS
12. BDHI POINTER NO. 1 - VOR NO. 1 SELECTOR SWITCH
13. BDHI POINTER NO.2 - VOR NO.2 SELECTOR SWITCH
14. BEARING DISTANCE HEADING INDICATOR (BDHI) TYPICAL
15. BDHI POINTER NO.1
16. BDHI POINTER NO.2
17. INTERPHONE CONTROL PANEL (TYPICAL)
18. INTERPHONE VHF - NAV NO.1
19. INTERPHONE VHF - NAV NO.2

VHF Navigation System Related Components

VHF NAV FREQ (MHz)	VHF NAV FUNCTION	GLIDESCOPE FREQ (MHz)	VHF NAV FREQ (MHz)	VHF NAV FUNCTION	GLIDESCOPE FREQ (MHz)	VHF NAV FREQ (MHz)	VHF NAV FUNCTION	GLIDESCOPE FREQ (MHz)
108.00	TVOR	—	109.50	ILS	332.60	111.00	TVOR	—
.10	ILS	334.70	.60	TVOR	—	.10	ILS	331.70
.20	TVOR	—	.70	ILS	333.20	.20	TVOR	—
.30	ILS	334.10	.80	TVOR	—	.30	ILS	332.30
.40	TVOR	—	.90	ILS	333.80	.40	TVOR	—
.50	ILS	329.90	110.00	TVOR	—	.50	ILS	332.90
.60	TVOR	—	.10	ILS	334.40	.60	TVOR	—
.70	ILS	330.50	.20	TVOR	—	.70	ILS	333.50
.80	TVOR	—	.30	ILS	335.00	.80	TVOR	—
.90	ILS	329.30	.40	TVOR	—	.90	ILS	331.10
109.00	TVOR	—	.50	ILS	329.60	112.00	VOR	—
.10	ILS	331.40	.60	TVOR	—	↕	↕	—
.20	TVOR	—	.70	ILS	330.20	↕	↕	—
.30	ILS	332.00	.80	TVOR	—	↕	↕	—
.40	TVOR	—	.90	ILS	330.80	117.95	VOR	—

VOR/LOC/Glideslope Frequency Pairing

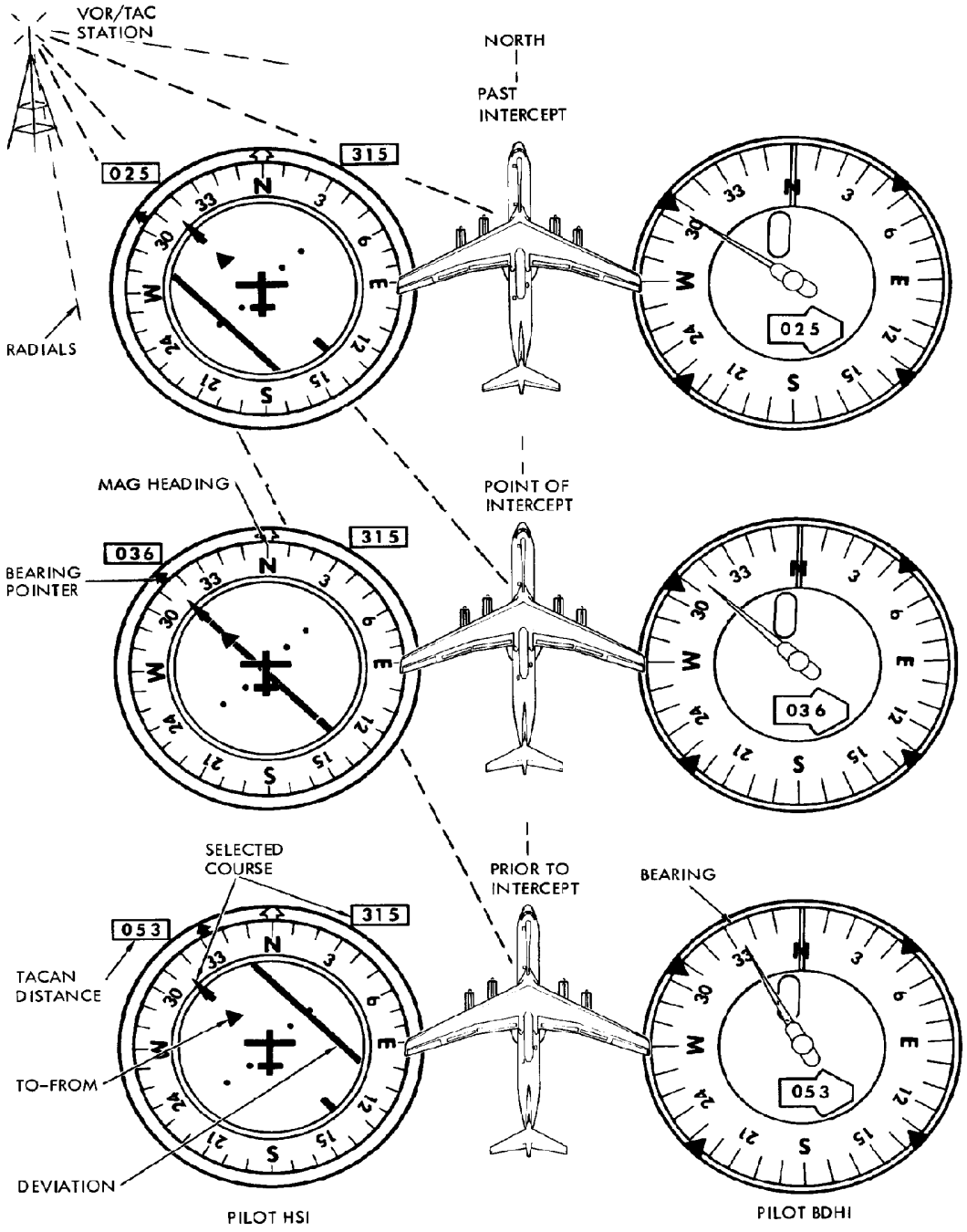

VOR/TAC Flight

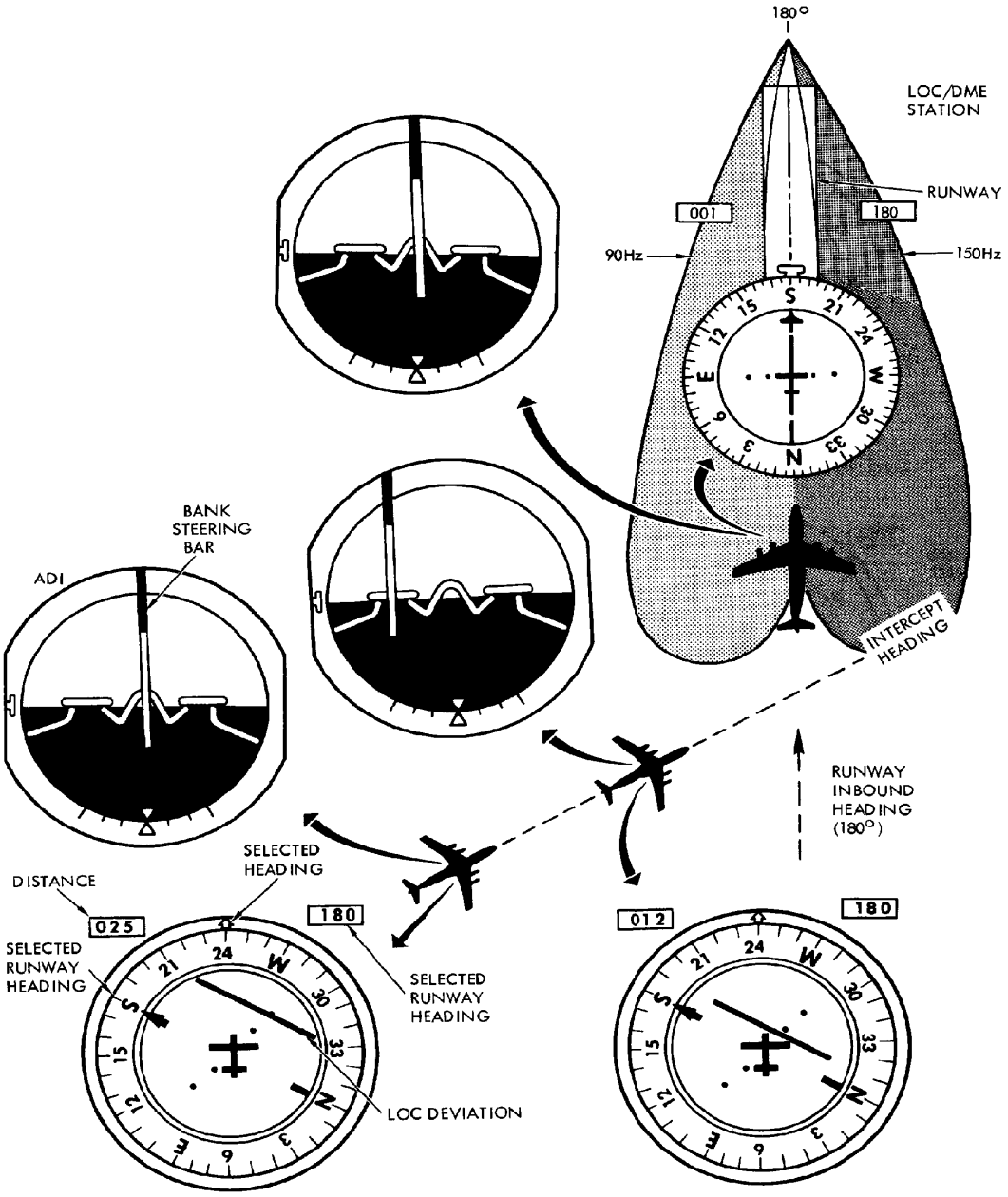

Localizer Indications

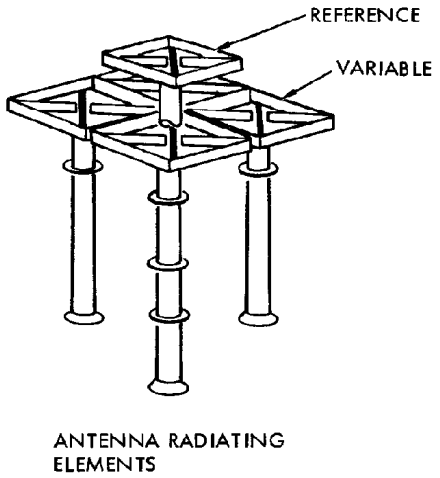

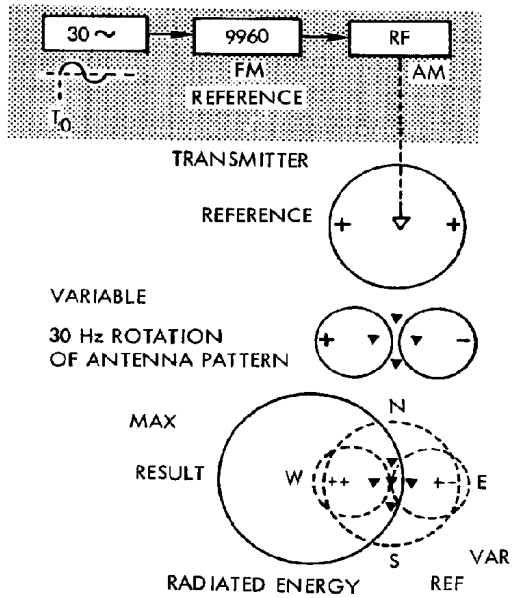

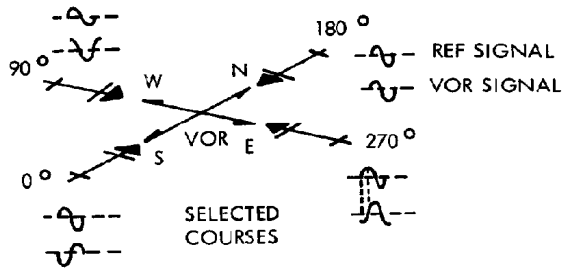

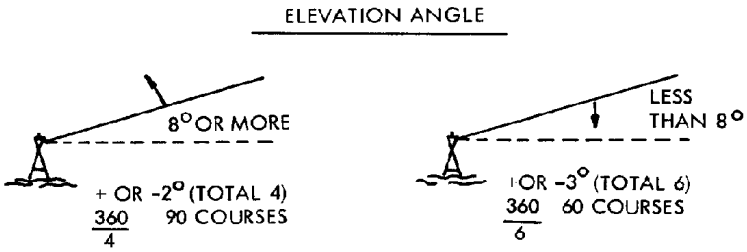

VOR Ground Station Operation

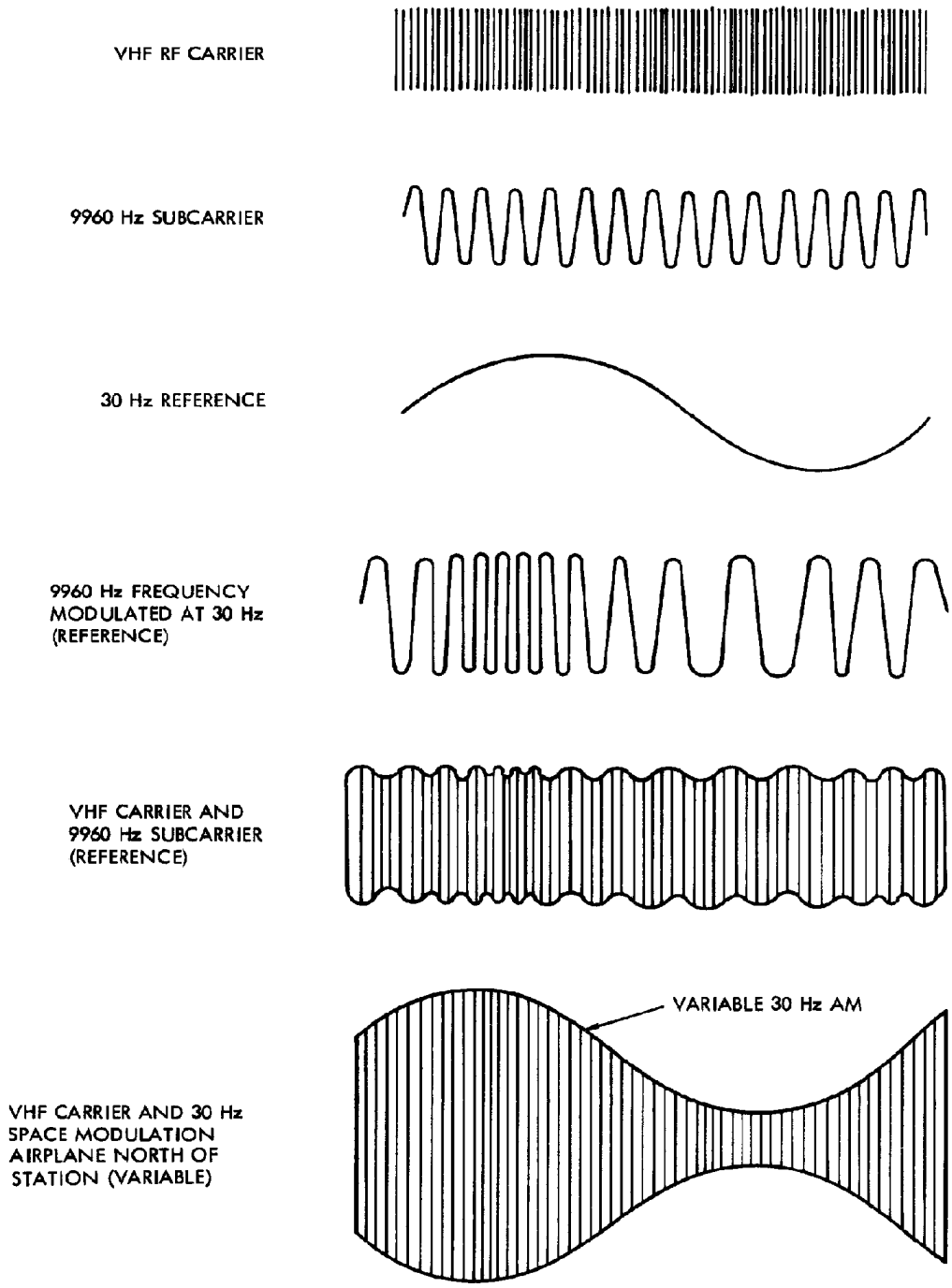

VOR Signal from Ground Station

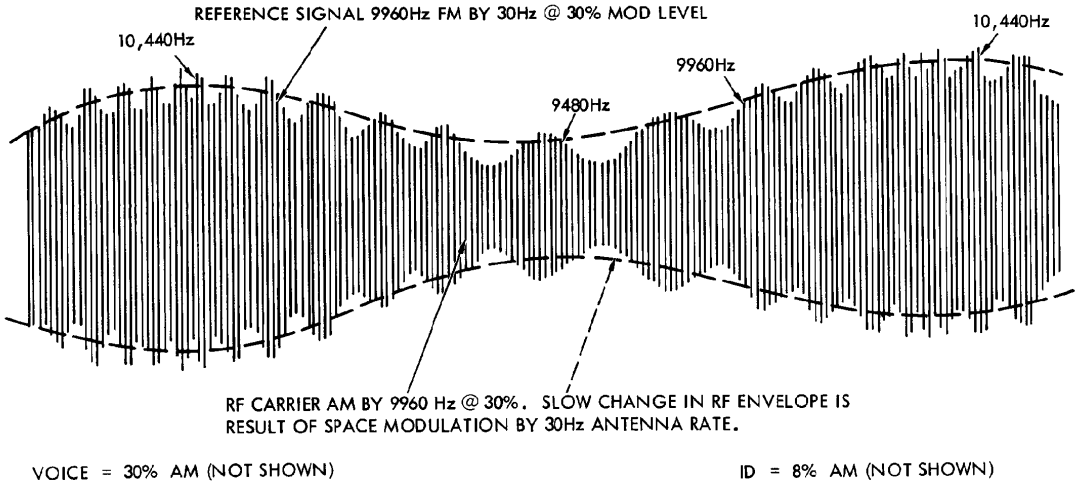

Composite Received VOR RF Signal

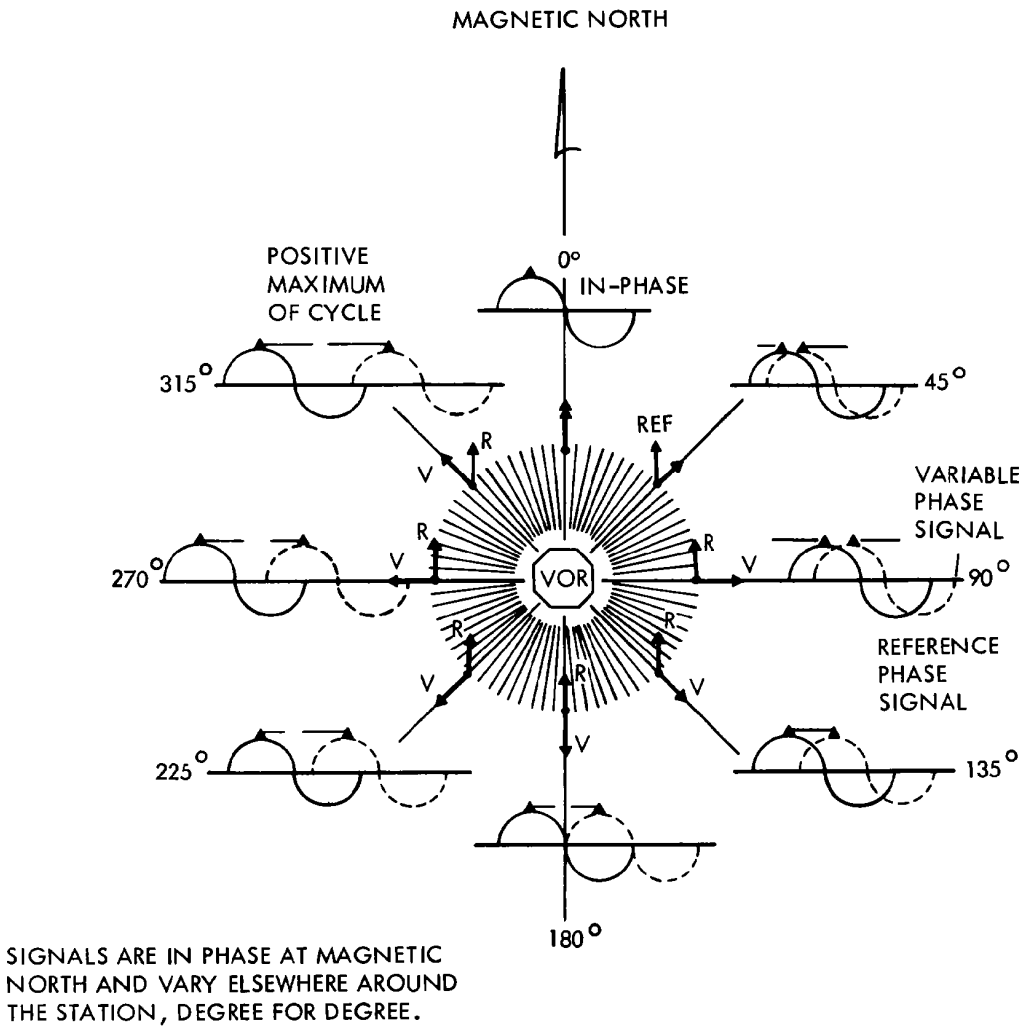

VOR 30 Hz Signals Phase Angle Relationship

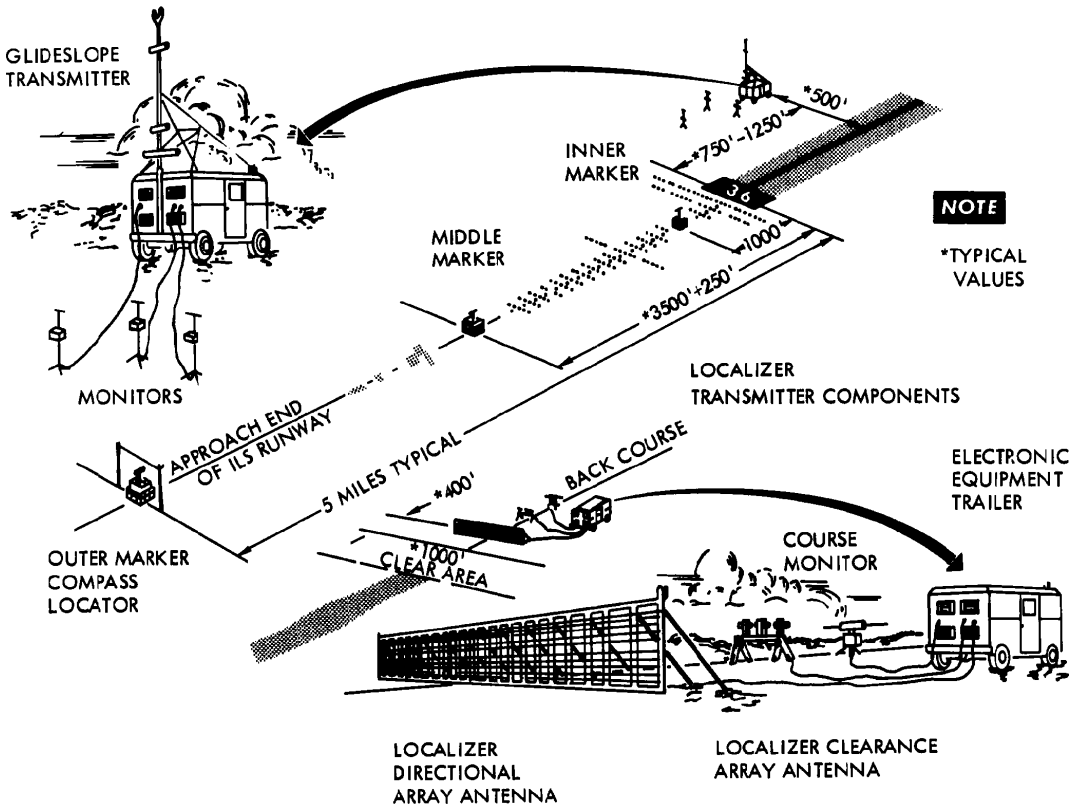

Typical Instrument Landing System (ILS) Equipment Installation

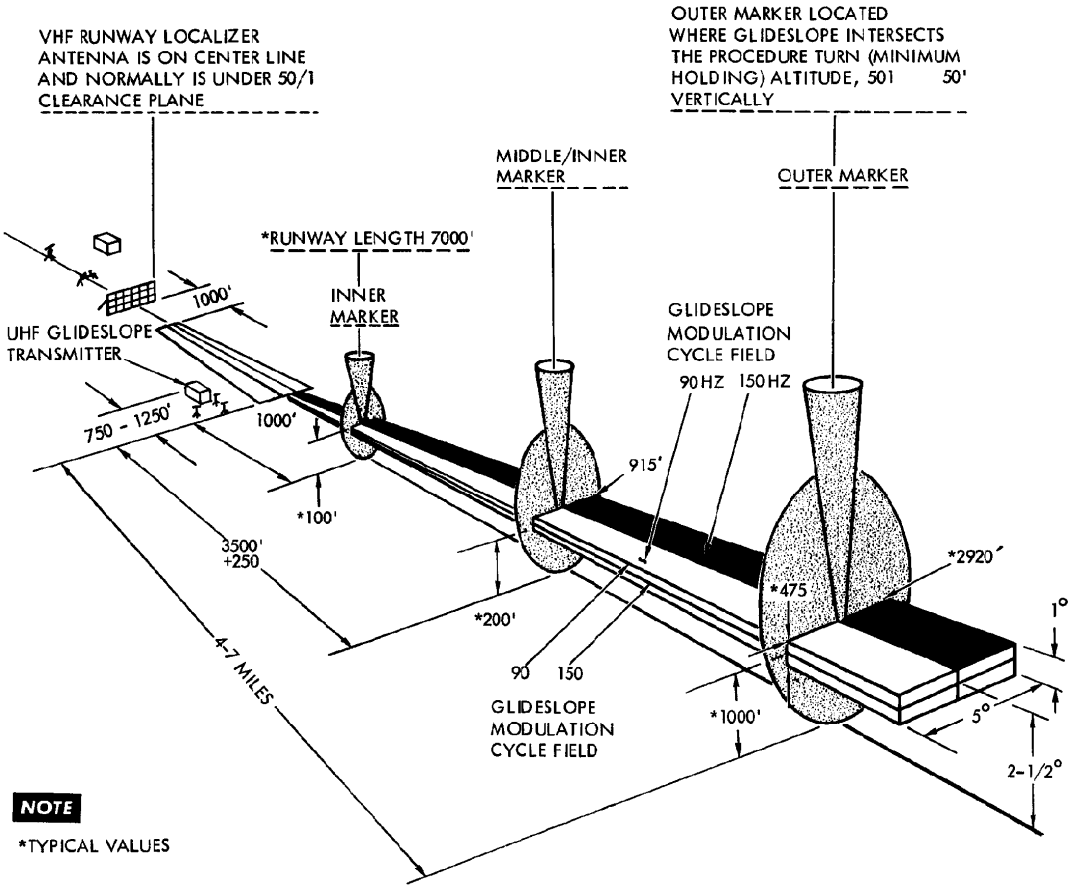

Typical Instrument Landing System (ILS)

Tactical Air Navigation (TACAN) System

The AN/ARN-118 airborne TACAN system consists of a TACAN receiver-transmitter, TACAN control, a digital-to-analog adapter, and a shockmount. The system provides the pilot and flight control systems with accurate and reliable navigational information on both X and Y TACAN channels. A self-contained, automatic antenna switch allows the system to operate with either single or dual TACAN antennas. Analog and digital distance and bearing outputs are provided to make the system compatible with either analog or digital indicators. Distance, bearing, and range outputs are available for other airplane systems such as a radio navigation system. The system operates within 390 nautical miles (NM) of a surface TACAN station (air-to-ground) or within 200 NM of a reference airplane (air-to-air). Since the TACAN system operating limit is line of sight, the actual operating range is dependent on airplane altitude. The system is designed to prevent 40-degree error lock-on, co-channel interference, and lock-on to false or incorrect signals. The system uses advanced digital circuitry to reduce space and weight. The AN/ARN-118 airborne TACAN system produces slant-range distance, relative bearing, course deviation, to-from, and audio identification information for use by the flight crew. The distance, bearing, and audio identification information indicates the location of a complementary surface station with respect to the airplane. The system produces distance information with respect to a similarly equipped airplane or distance, bearing, and course deviation information with respect to a suitably equipped, cooperating airplane as an auxiliary function.

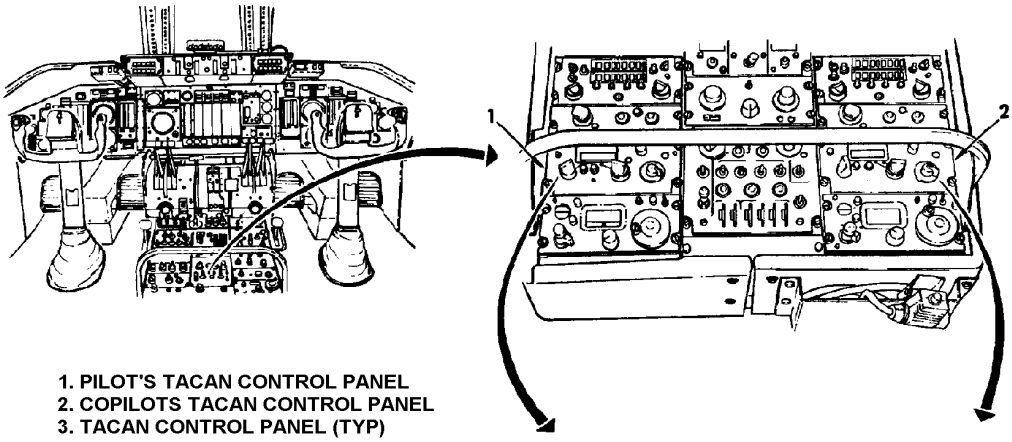

1. PILOT'S TACAN CONTROL PANEL
2. COPILOTS TACAN CONTROL PANEL
3. TACAN CONTROL PANEL (TYP)
4. CHANNEL DIGITAL DISPLAY
5. VOLUME CONTROL
6. MODE SELECTOR
7. X/Y CHANNEL
8. UNITS CHANNEL SELECTOR
9. TEST SWITCH
10. TEST SWITCH
11. TENS CHANNEL SELECTOR
12. TACAN NO. 1 RECEIVER/TRANSMITTER
13. TACAN NO. 1 ADAPTER
14. TACAN NO. 2 RECEIVER/TRANSMITTER
15. TACAN NO. 2 ADAPTER

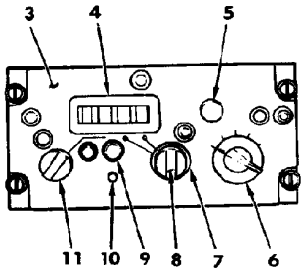

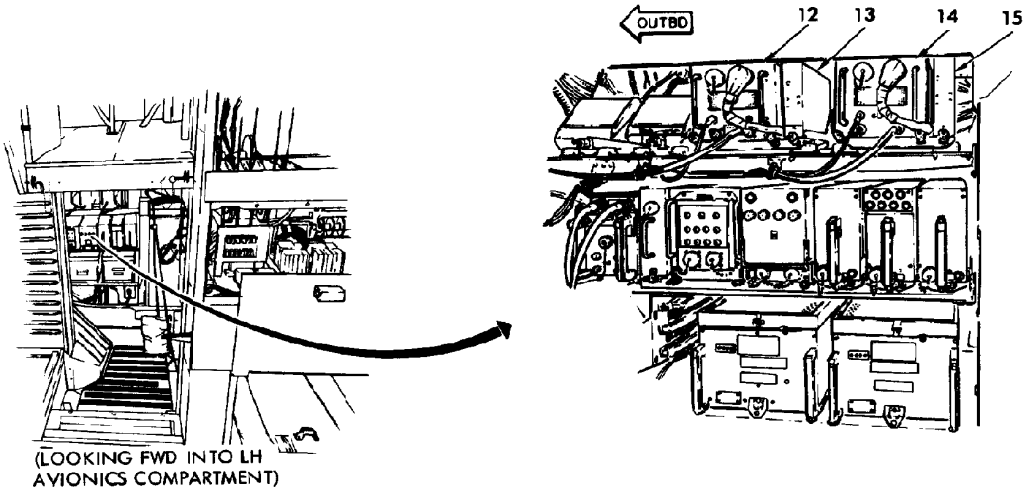

TACAN System Components (Sheet 1 of 2)

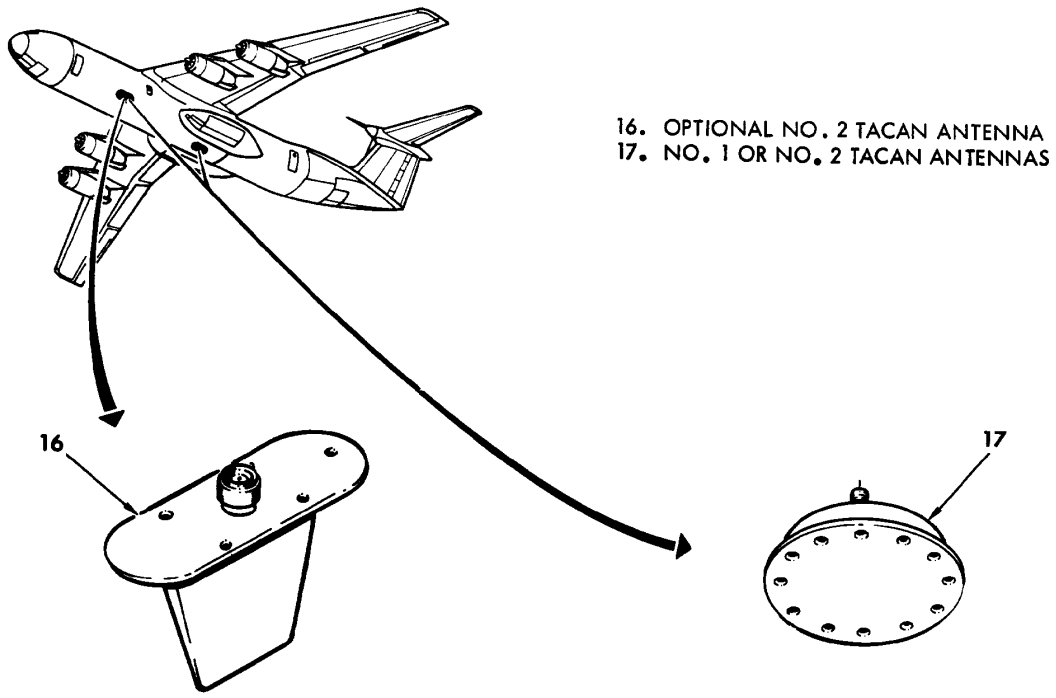

TACAN System Components (Sheet 2 of 2)

[redacted]

OXYGEN SYSTEM

General Description

The oxygen system is used to supply crew members and passengers with oxygen in case the cabin altitude goes above a certain limit. Since cabin pressure is not sufficient to force air into the lungs at higher altitudes, the oxygen system is used to supply oxygen at the proper flow rates and pressures. There are two independent oxygen systems on the airplane. The crew system is used exclusively by the flight crew and the troop system is used by passengers in the cargo compartment. Both systems store oxygen in its liquid state and convert it into a gas before reaching the user. Both systems have various indicators, lights, and switches to monitor and test the oxygen system. External service panels have valves that aid in easily servicing the oxygen system. Portable oxygen bottles provide mobility for the crew when oxygen is required.

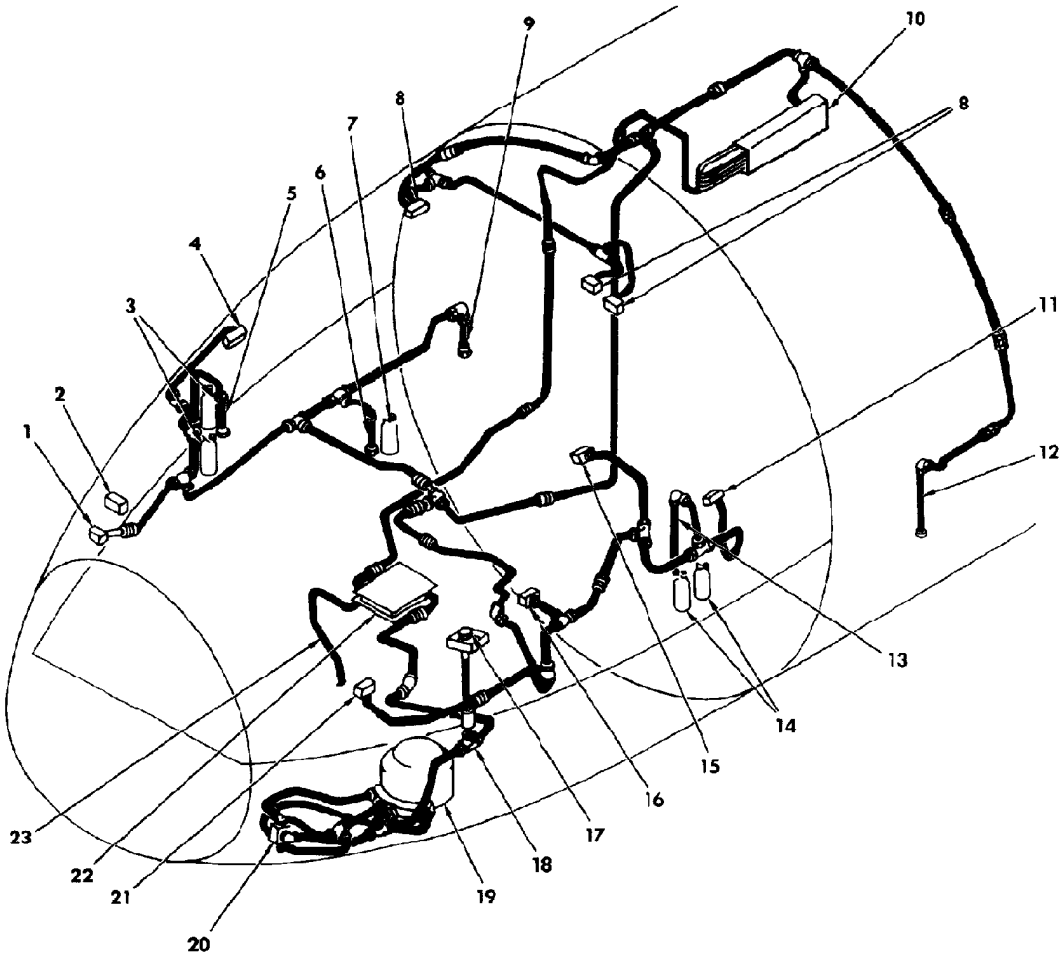

1. COPILOT'S REGULATOR
2. QUANTITY INDICATION PANEL
3. COPILOT'S PORTABLE OXYGEN BOTTLES
4. FLIGHT ENGINEER'S REGULATOR
5. COPILOT'S RECHARGING HOSE
6. LAVATORY RECHARGING HOSE
7. LAVATORY PORTABLE OXYGEN BOTTLE
8. CREW BUNK REGULATORS
9. RIGHT FWD CARGO COMPARTMENT RECHARGING HOSE
10. WARMING COILS
11. CREW REST AREA REGULATOR
12. LEFT FWD CARGO COMPARTMENT RECHARGING HOSE
13. CREW REST AREA RECHARGING HOSE
14. CREW REST AREA PORTABLE OXYGEN BOTTLES
15. NAVIGATOR'S REGULATOR
16. OBSERVER'S REGULATOR
17. MANUALLY OPERATED SHUTOFF VALVE KNOB
18. MANUALLY OPERATED SHUTOFF VALVE
19. CONVERTER
20. SERVICE VALVES
21. PILOT'S REGULATOR
22. HEAT EXCHANGER
23. CONDENSATE DRAIN LINE

Crew Oxygen System

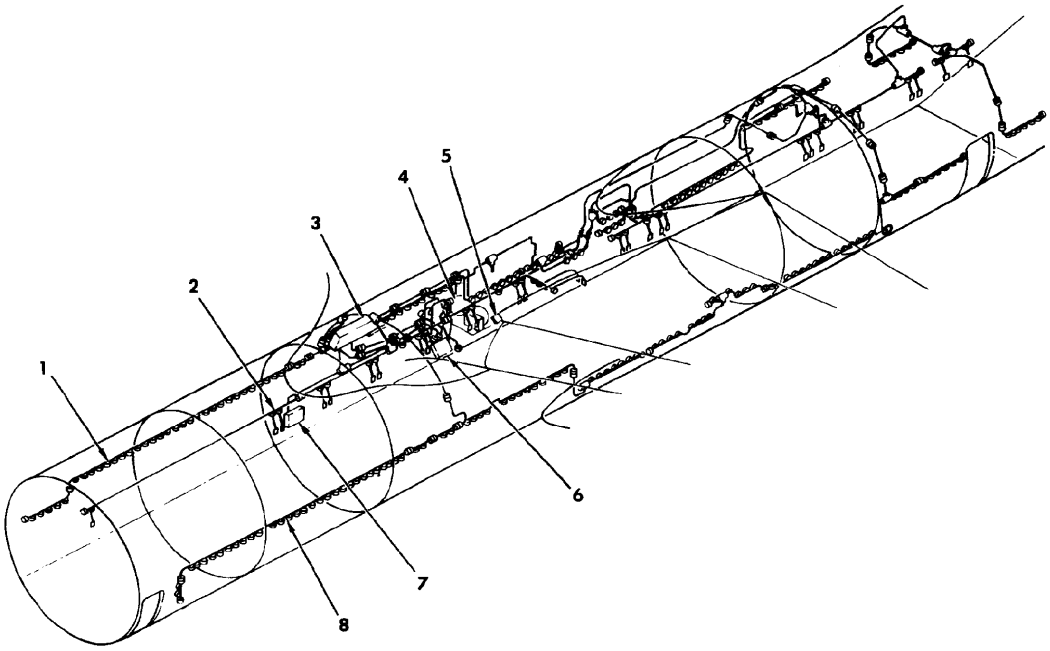

1. RIGHT SIDE OXYGEN MANIFOLD
2. OVERHEAD OXYGEN MANIFOLD
3. OXYGEN REGULATOR PANEL
4. OXYGEN CONVERTER PALLET
5. MANUALLY OPERATED SHUTOFF VALVES
6. AFT THERAPEUTIC OXYGEN BOX
7. FWD THERAPEUTIC OXYGEN BOX
8. LEFT SIDE OXYGEN MANIFOLD

Troop Oxygen System

Crew Oxygen System

The Crew Oxygen System is a diluter-demand automatic pressure breathing system with a supply pressure of approximately 300 PSI. Oxygen is supplied from a 25-liter converter located in the left side of the nose landing gear wheel well. Oxygen is fed from the converter through a manual shutoff valve, heat exchanger, and warming coils before going to nine regulators. These regulators which are in various locations in the flight station are the pressure demand type. Oxygen masks attached to the regulators fit snugly over the users face to eliminate as much leakage as possible. Five oxygen recharger outlets located in the flight station, lavatory, and forward cargo compartment are used to recharge portable oxygen bottles. A service panel on the forward left side of the airplane contains a combination fill buildup and vent valve, and a drain valve. These valves are used to service, drain, and purge the system. A liquid oxygen quantity indicator and an indicator test switch are mounted on a panel on the copilot’s side console. They are used to monitor and test the quantity indicating system. An OXY QUANTITY LOW annunciator light warns the crew of low liquid oxygen quantity.

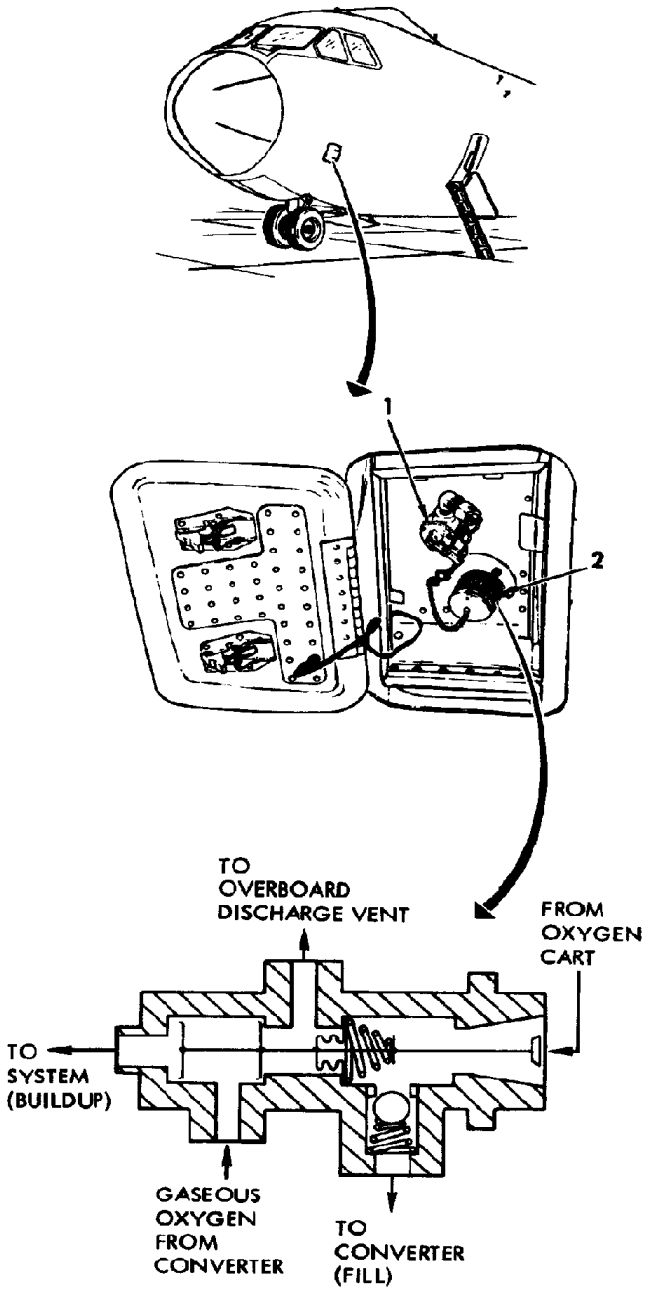

1. DRAIN VALVE
2. FILL BUILDUP AND VENT VALVE

Crew Oxygen Service Panel

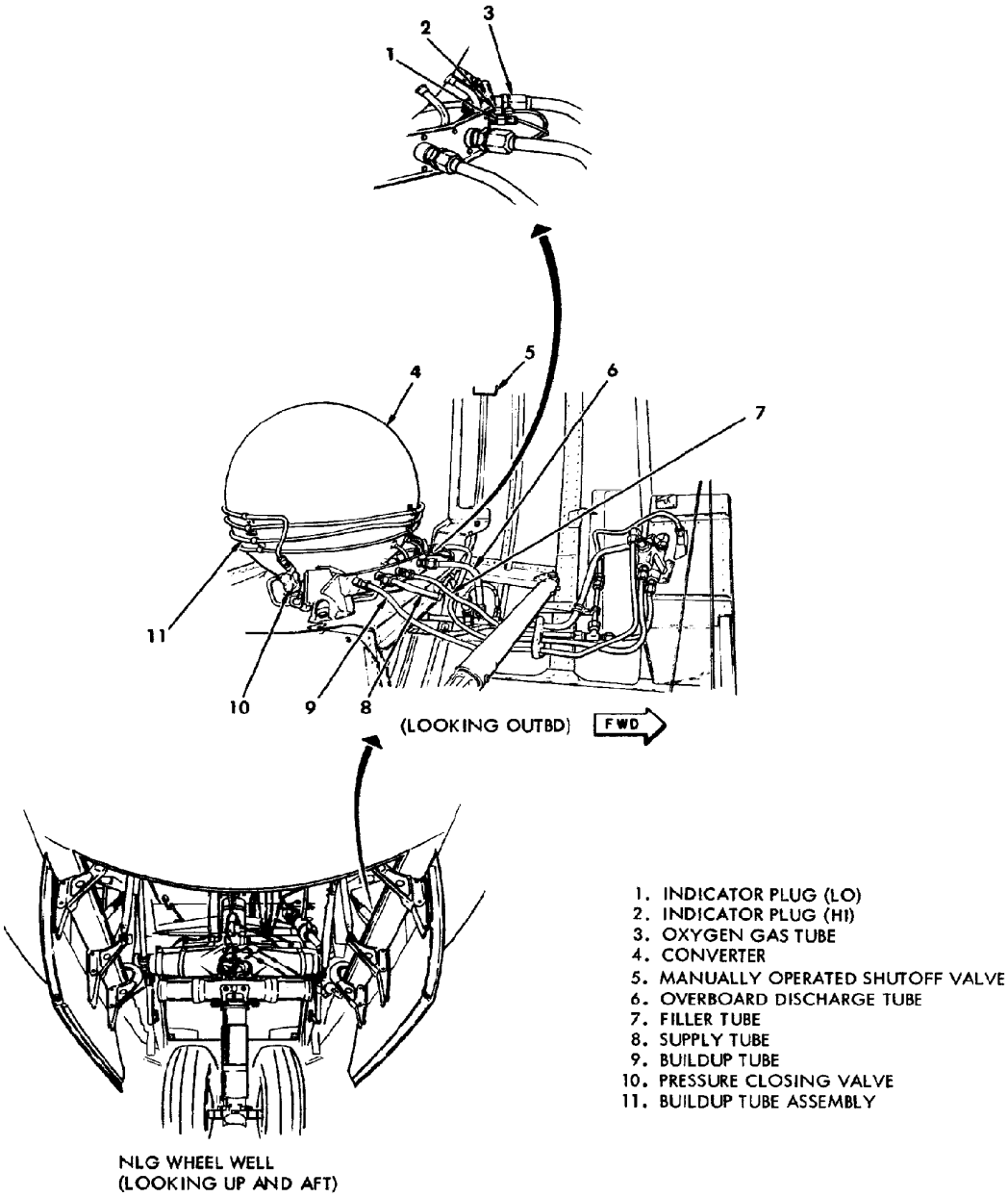

1. INDICATOR PLUG (LO)
2. INDICATOR PLUG (HI)
3. OXYGEN GAS TUBE
4. CONVERTER
5. MANUALLY OPERATED SHUTOFF VALVE
6. OVERBOARD DISCHARGE TUBE
7. FILLER TUBE
8. SUPPLY TUBE
9. BUILDUP TUBE
10. PRESSURE CLOSING VALVE
11. BUILDUP TUBE ASSEMBLY

Crew Oxygen Converter

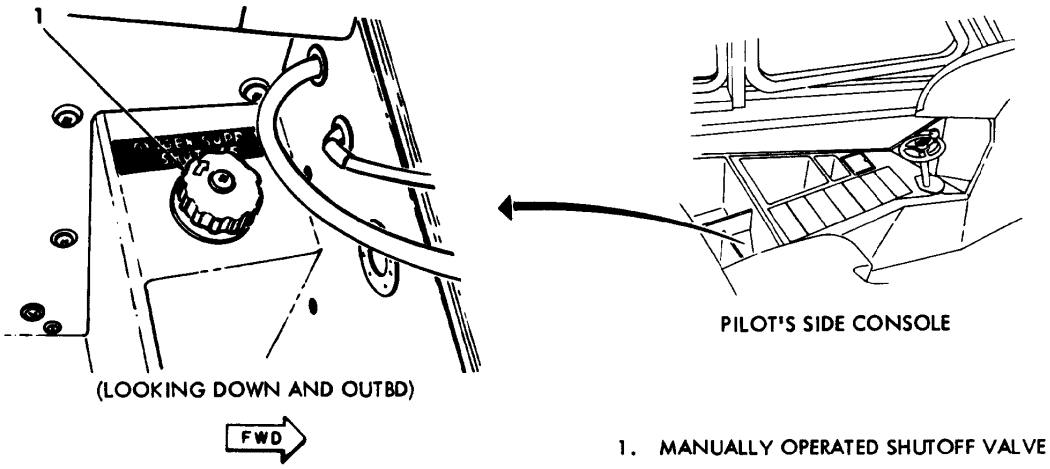

Crew Oxygen Manually Operated Shutoff Valve Control

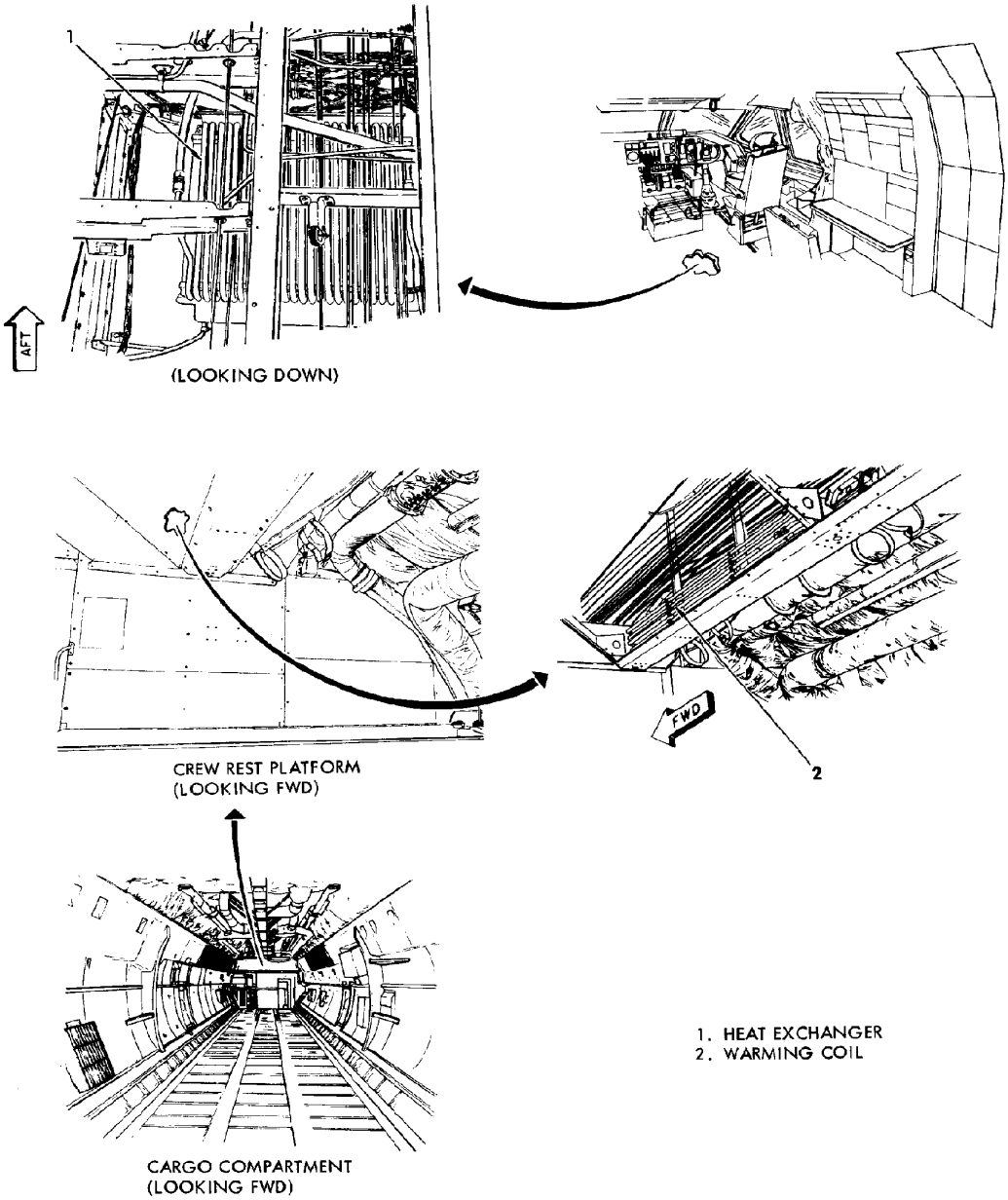

Crew Oxygen Heat Exchanger and Warming Coil

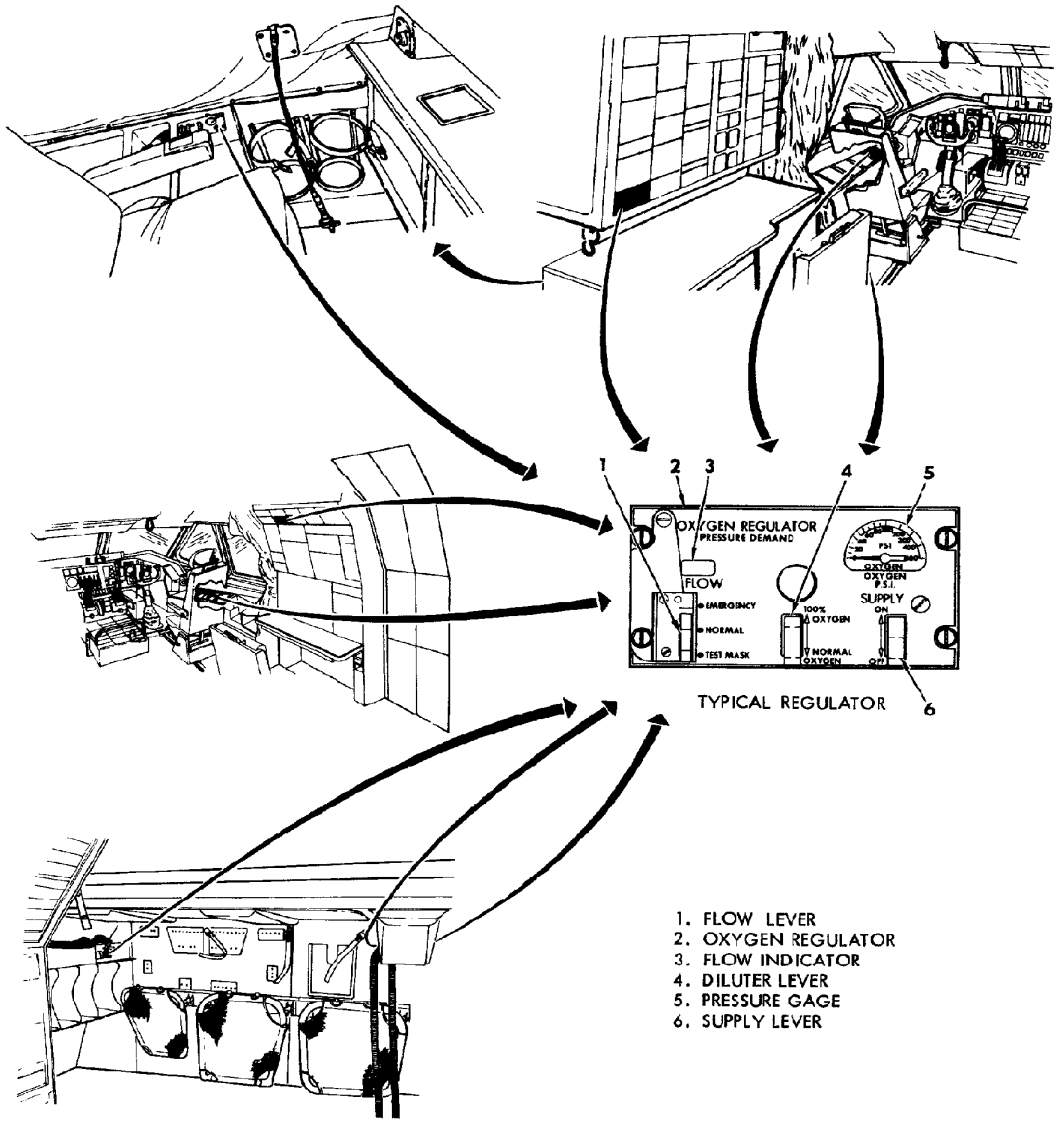

Crew Oxygen Regulators

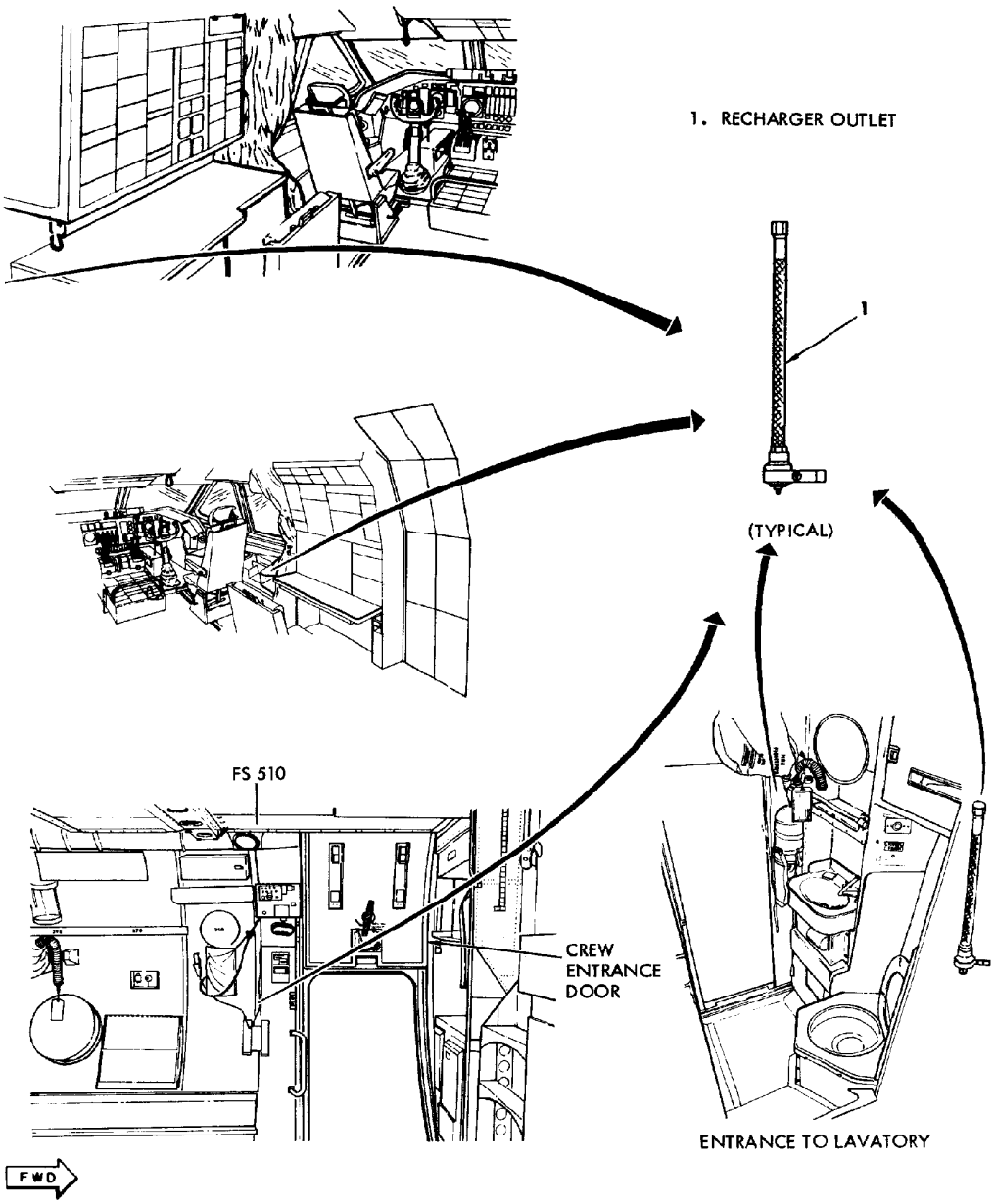

Crew Oxygen Recharger Outlets

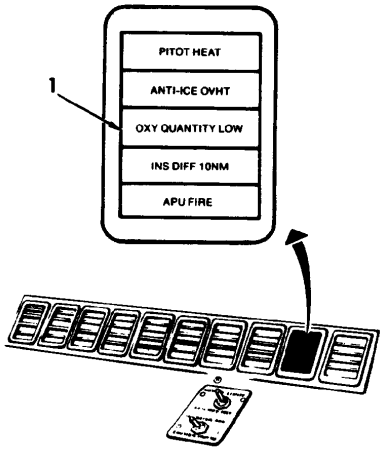

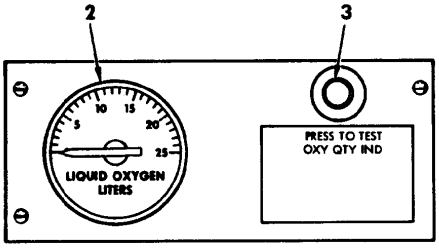

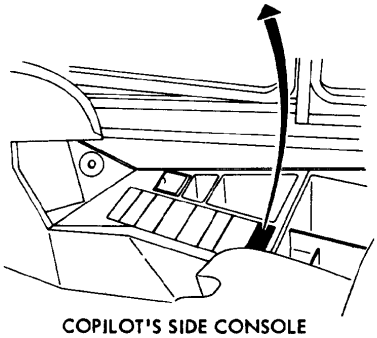

COPILOT'S SIDE CONSOLE

1. OXY QUANTITY LOW ANNUNCIATOR LIGHT
2. LIQUID OXYGEN QUANTITY INDICATOR
3. PRESS TO TEST OXY QTY IND BUTTON

Crew Liquid Oxygen Quantity Indication Panel and Annunciator Light

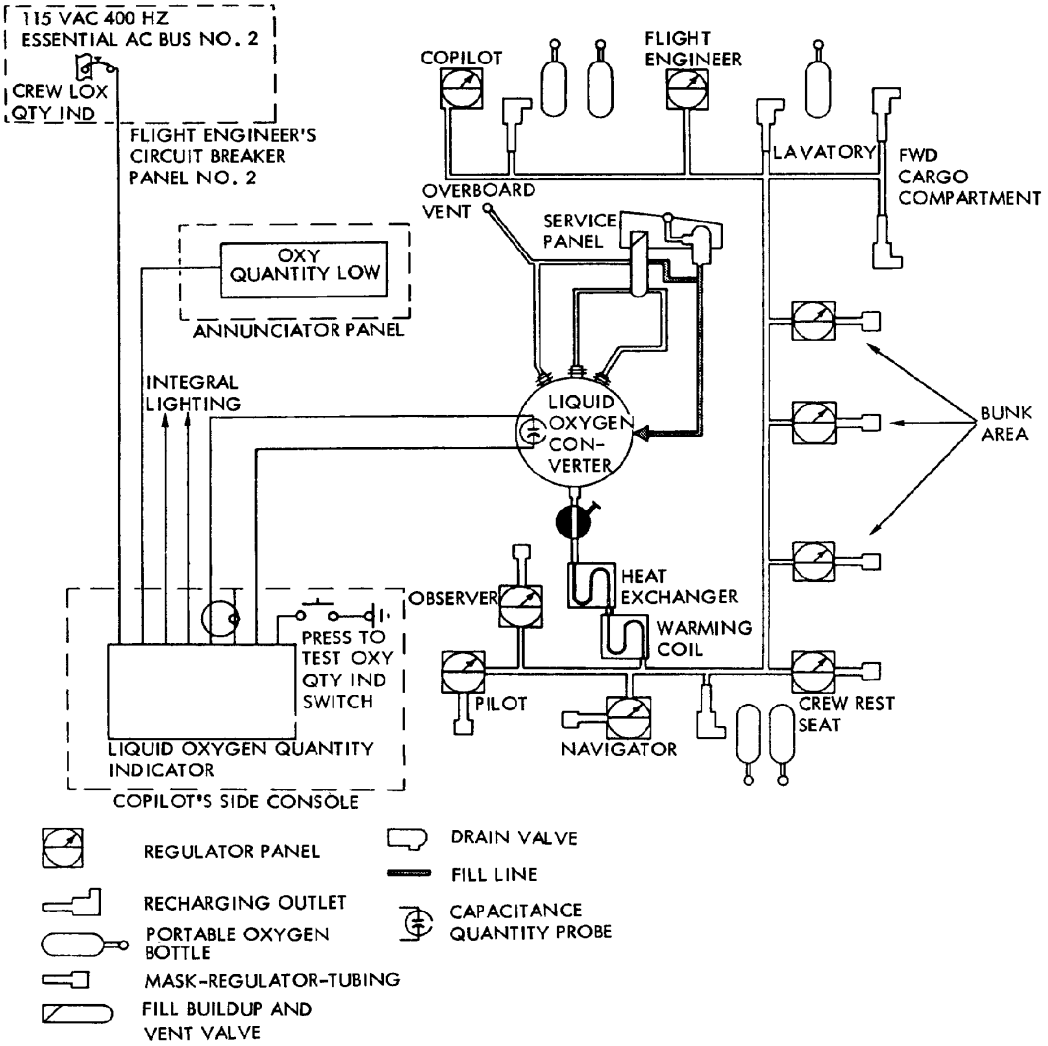

Crew Oxygen Schematic Diagram

Troop Oxygen System

The Troop Oxygen System is a continuous flow distribution system. The supply system operates at approximately 300 PSI. The supply system consists of two systems that are connected in parallel with the regulators in the cargo compartment. Oxygen is supplied from two converters. The converters are mounted on a removable pallet located in the right forward main landing gear pod. From each converter, oxygen is fed to a pallet heat exchanger. From the pallet, oxygen flows to a manual shutoff valve. Oxygen leaves the shutoff valve and goes to an oxygen regulator panel that controls the flow of oxygen. The panel is located on the right side of the cargo compartment. At the regulator panel, oxygen enters two heat exchangers. Three dual check valves are installed downstream of the heat exchangers. Two of the check valves allow one converter to supply both regulators. They also prevent backflow through an inoperative converter. The third dual check valve performs the same function for the therapeutic oxygen system. After flowing through the check valves, oxygen enters the continuous flow regulators. The regulators can be operated automatically or manually. In automatic mode, the regulator senses cabin altitude pressure and allows oxygen to flow above a certain limit. In manual mode, the regulator can supply oxygen at any altitude. In both modes, oxygen is regulated to the proper flow rate and pressure required to give the correct amount of oxygen for conditions. A pressure switch downstream of the regulators senses flow and completes a circuit to sound the cargo compartment warning horn and turn the cargo compartment lights on brightly. This signals the crew that oxygen is flowing through the regulators. Oxygen from the regulators flows through a network of tubing throughout the cargo compartment. The tubing has spaced outlets to connect reusable oxygen masks. The tubing runs along the full length of the cargo compartment on both sides and overhead. Enough outlets are provided so each passenger in the cargo compartment has an oxygen mask. Two therapeutic oxygen boxes are provided in the cargo compartment for passengers requiring therapeutic oxygen. The boxes tie in to the supply line before entering the system regulators. A manually operated shutoff valve mounted on the regulator panel turns therapeutic oxygen on and off. This can be done with or without oxygen being supplied to the distribution system. A liquid oxygen quantity indicator, LOX QTY LOW warning light, and an indicator test switch are provided to monitor quantity in each converter. They are mounted on a troop oxygen control panel on the regulator panel. Also on the control panel is a switch to control the intensity of the warning lights, an OXYGEN ON light, and a test switch for the warning horn and lights.

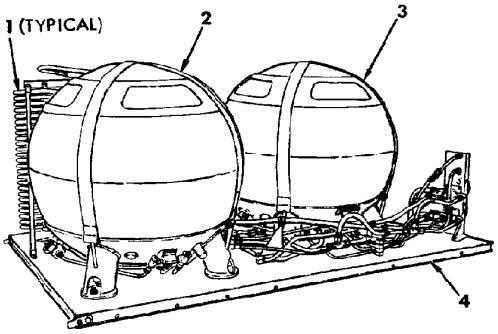

(LOOKING FWD)

1. HEAT EXCHANGER
2. NO. 1 CONVERTER
3. NO. 2 CONVERTER
4. CONVERTER PALLET
5. NO. 1 MANUALLY OPERATED SHUTOFF VALVE
6. NO. 2 MANUALLY OPERATED SHUTOFF VALVE
7. NO. 2 CONVERTER INDICATOR LIGHT SWITCH
8. CONVERTER PALLET DISCONNECT PLUG
9. NO. 1 QUANTITY INDICATOR PLUG (PALLET DISCONNECT)
10. NO. 2 QUANTITY INDICATOR PLUG (PALLET DISCONNECT)
11. NO. 2 FILL BUILDUP AND VENT VALVE
12. NO. 1 FILL BUILDUP AND VENT VALVE
13. NO. 2 DRAIN VALVE
14. NO. 1 DRAIN VALVE

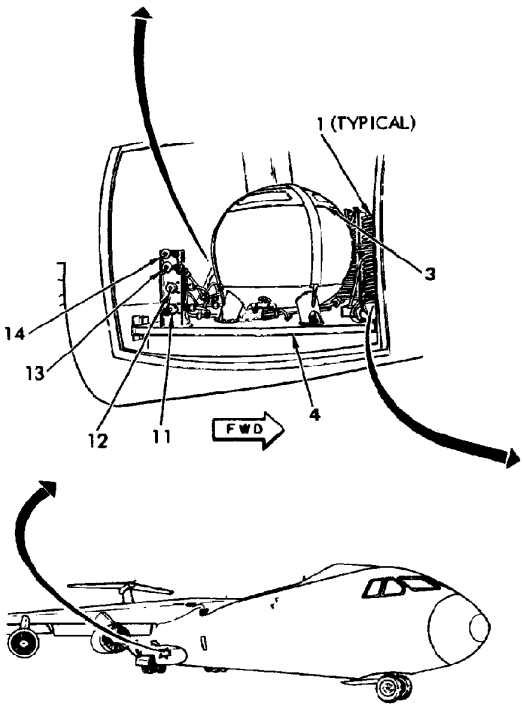

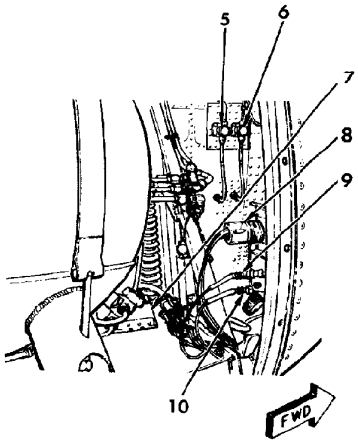

Troop Oxygen Converter Pallet and Manually Operated Shutoff Valve
(Sheet 1 of 2)

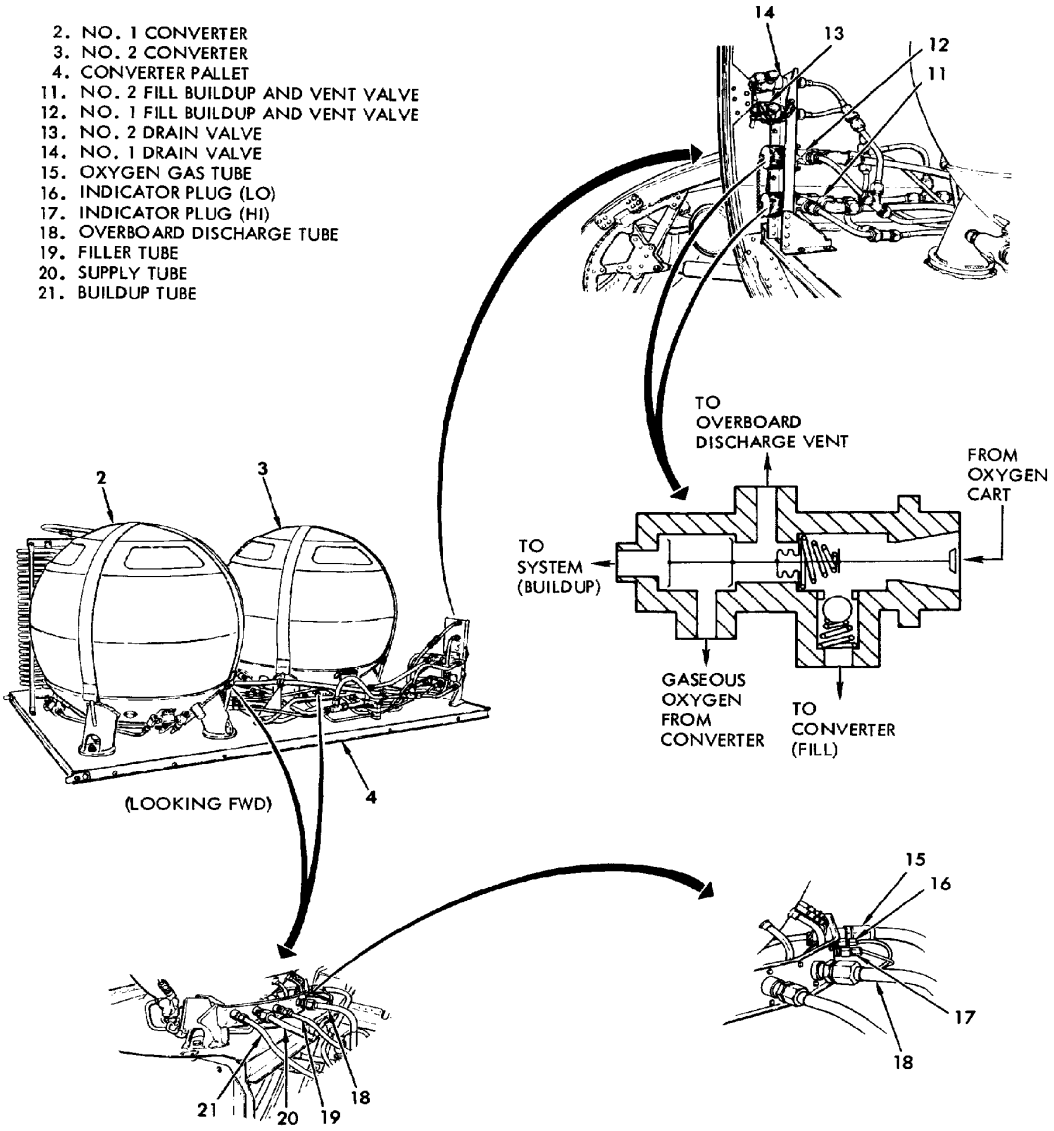

Troop Oxygen Converter Pallet and Manually Operated Shutoff Valve
(Sheet 2 of 2)

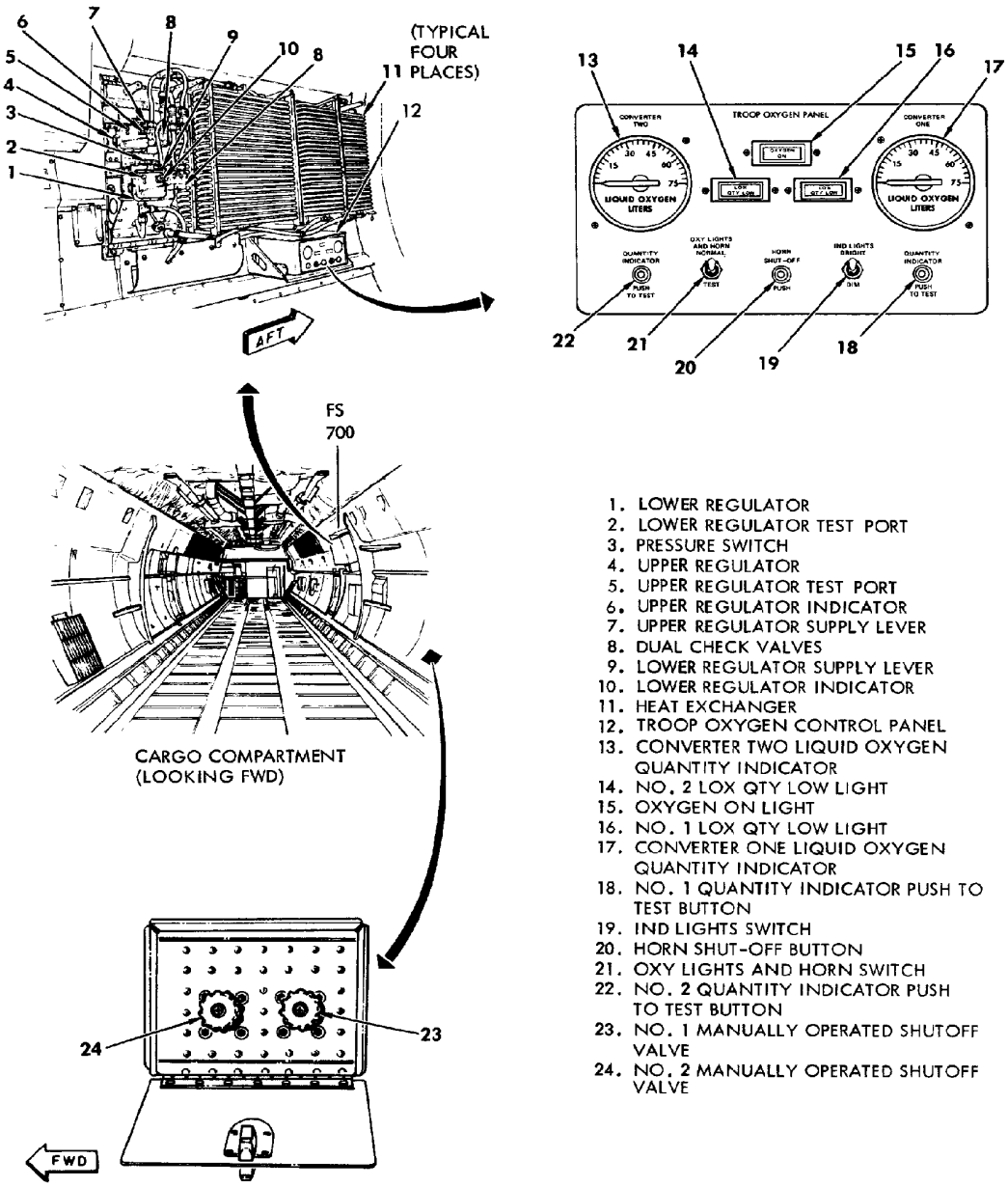

1. LOWER REGULATOR
2. LOWER REGULATOR TEST PORT
3. PRESSURE SWITCH
4. UPPER REGULATOR
5. UPPER REGULATOR TEST PORT
6. UPPER REGULATOR INDICATOR
7. UPPER REGULATOR SUPPLY LEVER
8. DUAL CHECK VALVES
9. LOWER REGULATOR SUPPLY LEVER
10. LOWER REGULATOR INDICATOR
11. HEAT EXCHANGER
12. TROOP OXYGEN CONTROL PANEL
13. CONVERTER TWO LIQUID OXYGEN QUANTITY INDICATOR
14. NO. 2 LOX QTY LOW LIGHT
15. OXYGEN ON LIGHT
16. NO. 1 LOX QTY LOW LIGHT
17. CONVERTER ONE LIQUID OXYGEN QUANTITY INDICATOR
18. NO. 1 QUANTITY INDICATOR PUSH TO TEST BUTTON
19. IND LIGHTS SWITCH
20. HORN SHUT-OFF BUTTON
21. OXY LIGHTS AND HORN SWITCH
22. NO. 2 QUANTITY INDICATOR PUSH TO TEST BUTTON
23. NO. 1 MANUALLY OPERATED SHUTOFF VALVE
24. NO. 2 MANUALLY OPERATED SHUTOFF VALVE

Troop Oxygen Regulator Panel

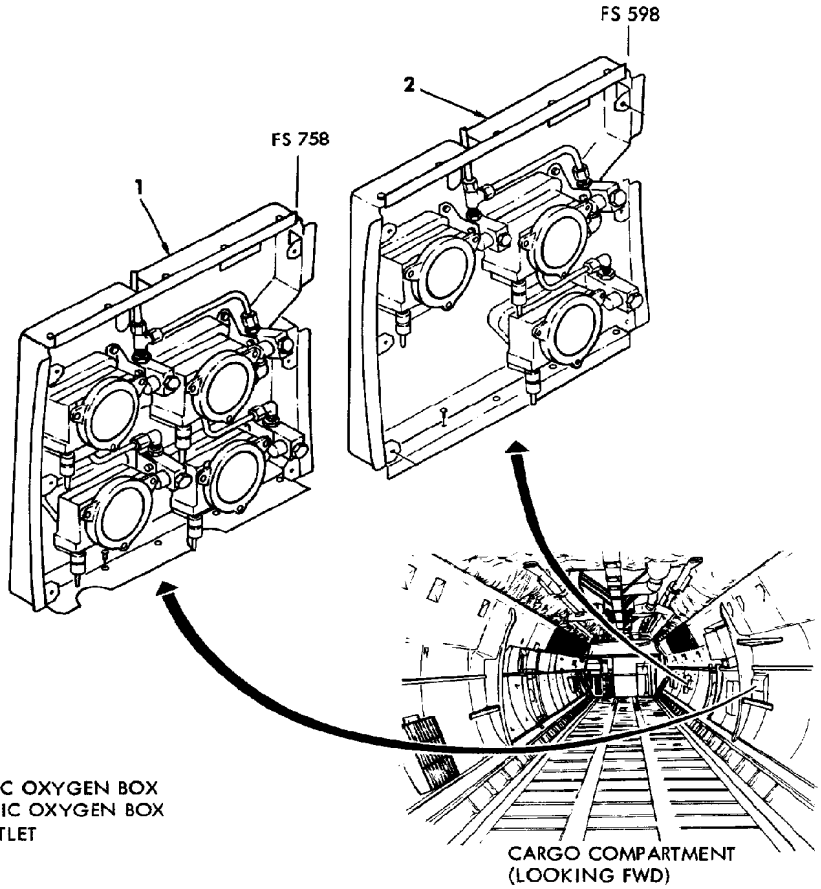

1. AFT THERAPEUTIC OXYGEN BOX
2. FWD THERAPEUTIC OXYGEN BOX
3. RECHARGER OUTLET

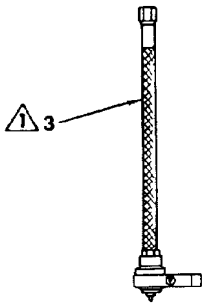

NOTE

1 RECHARGER OUTLETS ARE LOCATED ON RIGHT CARGO COMPARTMENT WALL AT APPROXIMATE FUSELAGE STATION 880, 1055, AND 1160

Therapeutic Oxygen Boxes

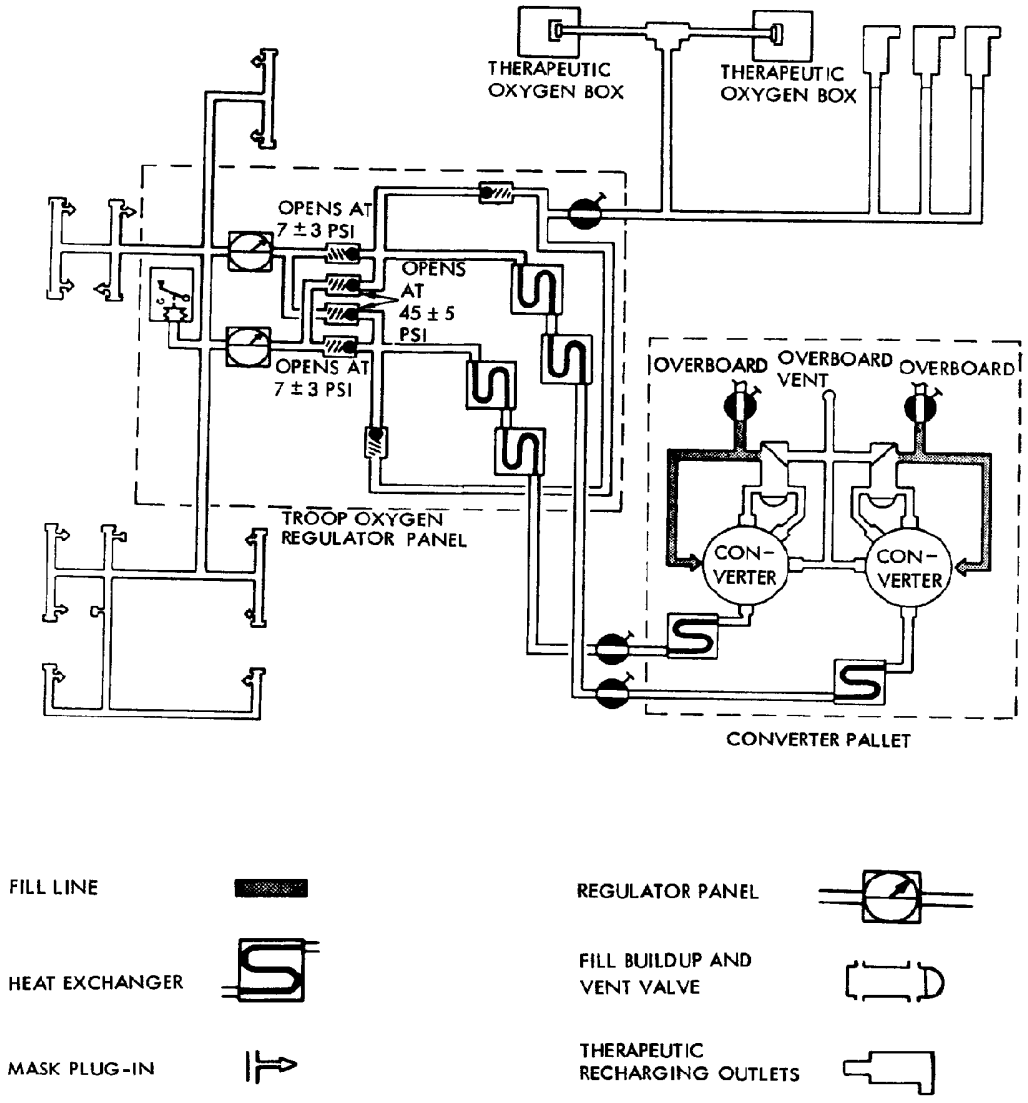

Troop and Therapeutic Oxygen System Schematic Diagram

Portable Oxygen Bottles

Five portable oxygen bottles are provided for the crew during emergencies. The bottles can also be used for movement in the cargo compartment when flying at high altitudes. Four portable oxygen bottles are stowed in the flight station: two aft of the copilot and two aft of the navigator. One other bottle is stowed in the lavatory. Each stowage location has a recharger outlet that is connected to the crew oxygen system. See Section II for more information about the recharger outlets. Each bottle consists of a low pressure oxygen cylinder and a pressure demand regulator. The regulator consists of a pressure gage, altitude selector knob, and a clip. The clip allows a crew member to attach the bottle to his/her clothing, if desired. The pressure gage marked from 0 PSI to 500 PSI with a red line at 450 PSI indicates cylinder pressure. The altitude selector knob is used to set the regulator for the altitude at which the bottle is being used. It has four positions: NORM 30M, 42M, and EMER. Since the regulator does not have a diluter mechanism, 100 percent oxygen is supplied in all four positions. The regulator primarily controls the pressure at varying pressures and flow rates. With the selector knob in NORM, oxygen is supplied at all altitudes, up to 30,000 feet, only on demand. For altitudes between 30,000 and 40,000 feet, the selector knob is placed to 30M. This position supplies oxygen pressure at a slight positive pressure. This is necessary to overcome mask leaks and possible altimeter lag. For altitudes between 40,000 and 42,000 feet, the selector knob is placed to 42M. The only difference between this position and the 30M position is pressure is further increased to combat mask leaks. For altitudes above 42,000 feet, the selector knob is placed in EMER. Again the pressure is increased due to increased mask leakage. Four portable oxygen bottle supports are located in various areas of the cargo compartment. Bottles being carried by crew members can be placed in any of these supports as required. Two supports are located on the left and right side of the cargo compartment at fuselage station 552. The other two supports are located on the right side of the cargo compartment at fuselage station 1288.

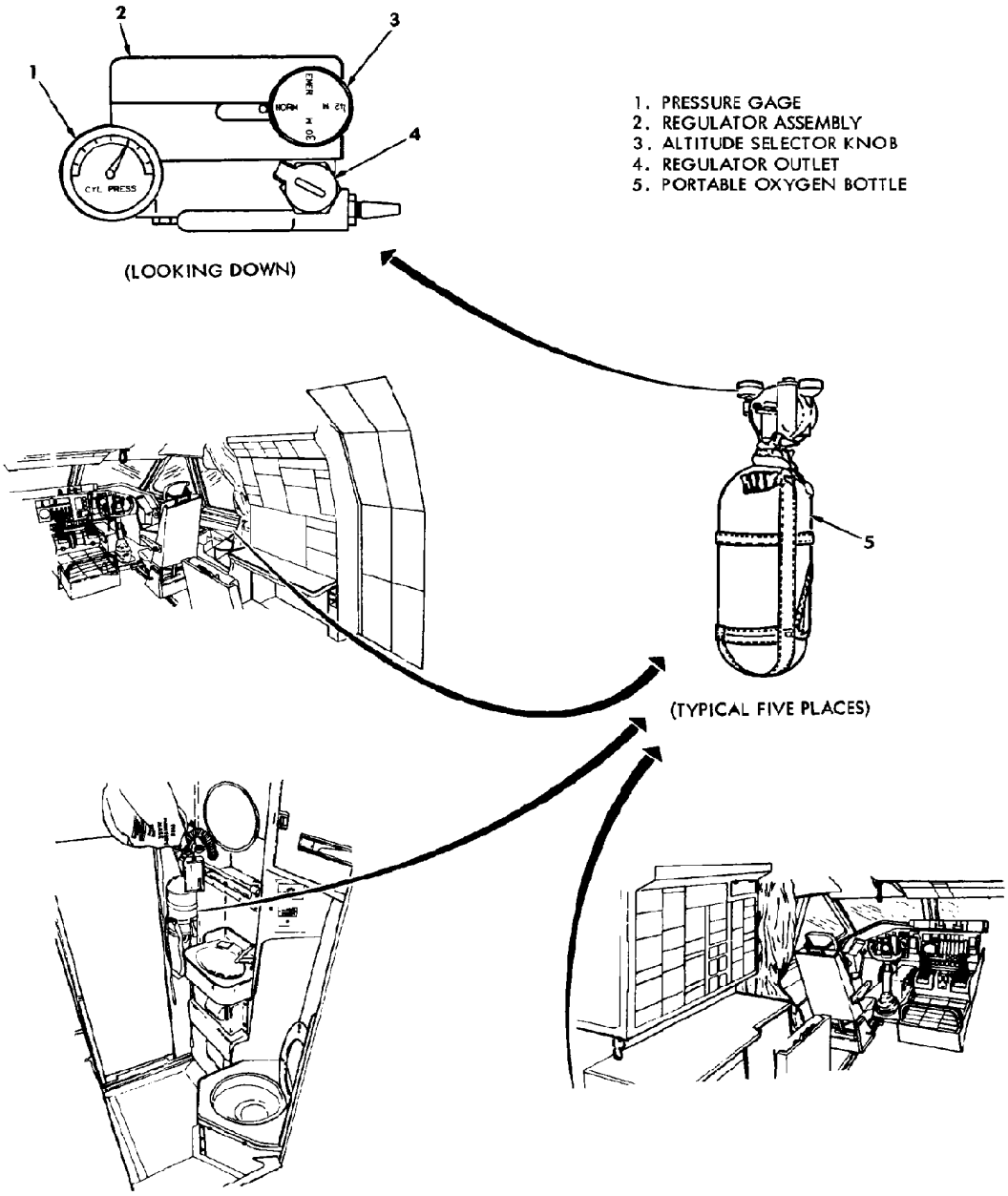

Portable Oxygen Bottles

AUXILIARY POWER UNIT (APU) SYSTEM

General Description

The auxiliary power unit (APU) system includes the APU engine, engine fuel control, starting/ignition, bleed air, engine controls, indicating, and oil subsystems. Overall APU system functions and operation are described in this section. Subsequent sections contain more detailed subsystem descriptions.

Engine Subsystem

The APU gas turbine engine performs two functions: one, the engine supplies air for starting the engines and for the airplane's environmental system (air conditioning, pressurization, and anti-icing); and two, the engine mechanically drives an AC generator used as an electrical power source when the engines are not operating or external power is unavailable. The engine delivers pneumatic power and shaft power either simultaneously or independently. The engine has starting and operating capabilities at ambient conditions from -54 degrees to +52 degrees C (-65 degrees to + 125 degrees F) at 1,000 feet pressure altitude to -54 degrees to +29 degrees C (-65 degrees to 84 degrees F) at 10,000 feet pressure altitude. Installed in the forward compartment of the left MLG pod, the engine weighs approximately 260 pounds. The engine is approximately 36 inches long, 28 inches wide, and 30 inches high. A two-stage centrifugal compressor, a single-can combustion chamber, a single-stage radial flow turbine, and an accessory section comprise the APU. Two large panels under the APU compartment and a small door on the compartment's outboard side provide engine access. The APU compartment also contains louver doors for engine air intake and an engine exhaust outlet. The APU uses airplane system fuel and is started with a hydraulic starter. Electrical ignition power is supplied from the airplane's battery or an external power source. Once the engine is started, it will automatically operate at a steady speed of approximately 42,000 rpm.

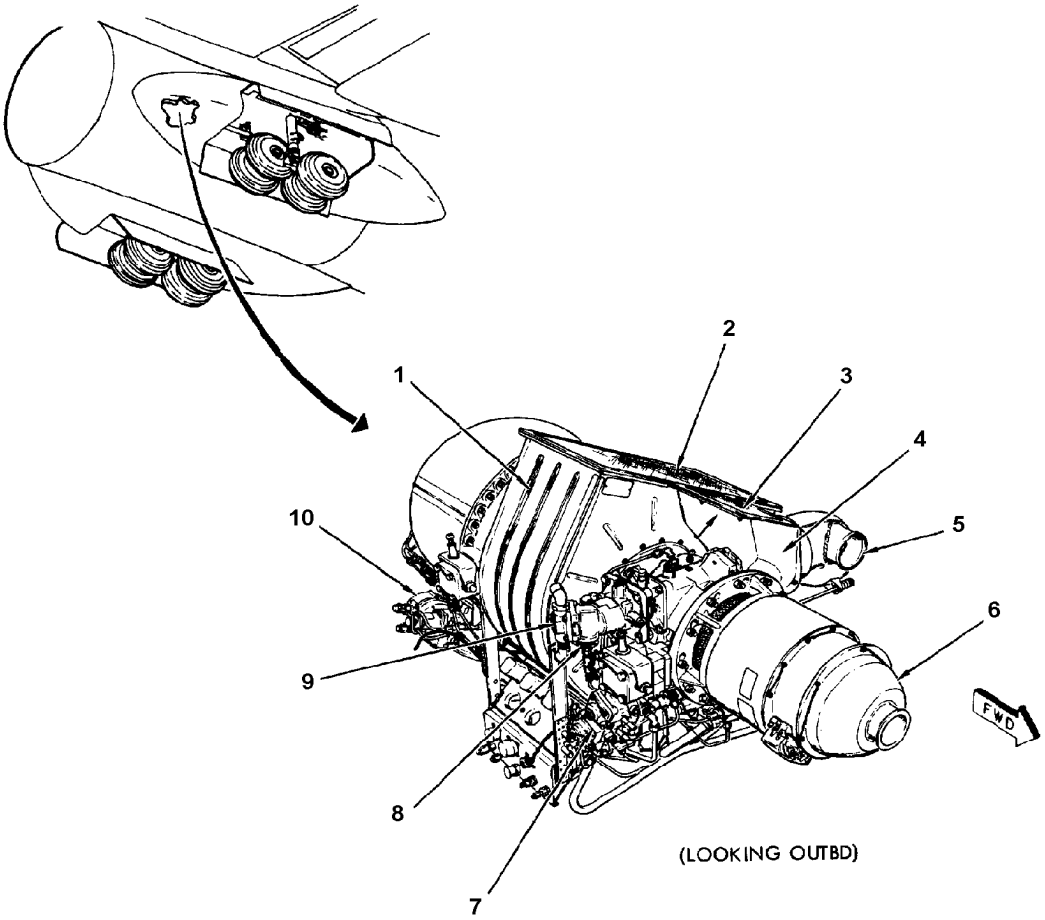

1. COMPRESSOR PLENUM
2. COMPRESSOR INLET
3. COOLING AIR INLET
4. COOLING FAN PLENUM
5. GENERATOR COOLING AIR
6. AC GENERATOR
7. FUEL CLUSTER
8. SEQUENCING OIL PRESSURE SWITCH
9. HYDRAULIC STARTER
10. BLEED LOAD AND FLOW CONTROL VALVE

Auxiliary Power Unit (APU) Engine System Components (Sheet 1 of 3)

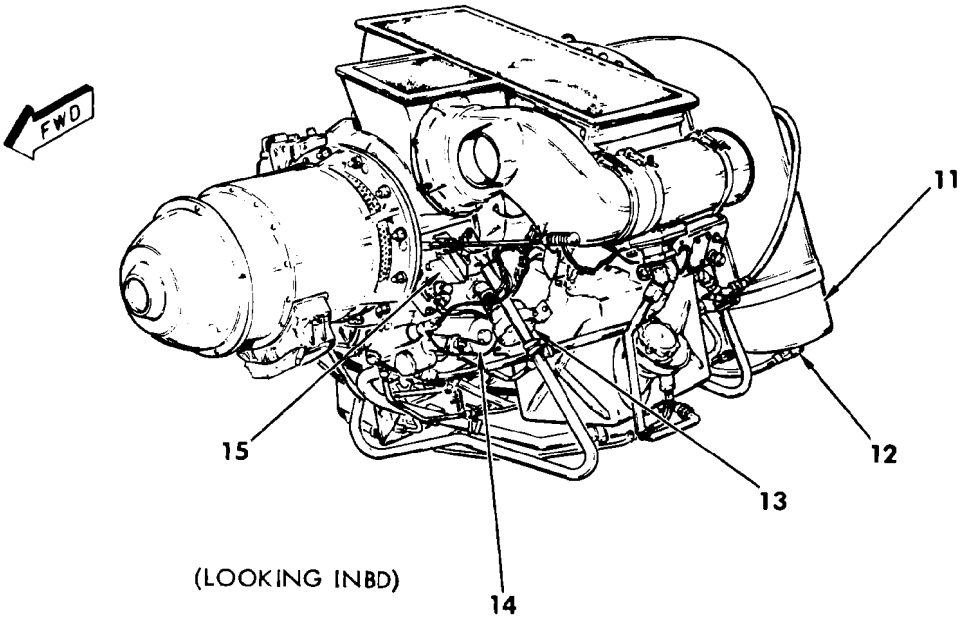

11. COMBUSTION LINER CAP
12. FUEL ATOMIZER
13. LOW OIL PRESSURE SWITCH
14. OIL PUMP
15. CENTRIFUGAL SPEED SWITCH

Auxiliary Power Unit (APU) Engine System Components (Sheet 2 of 3)

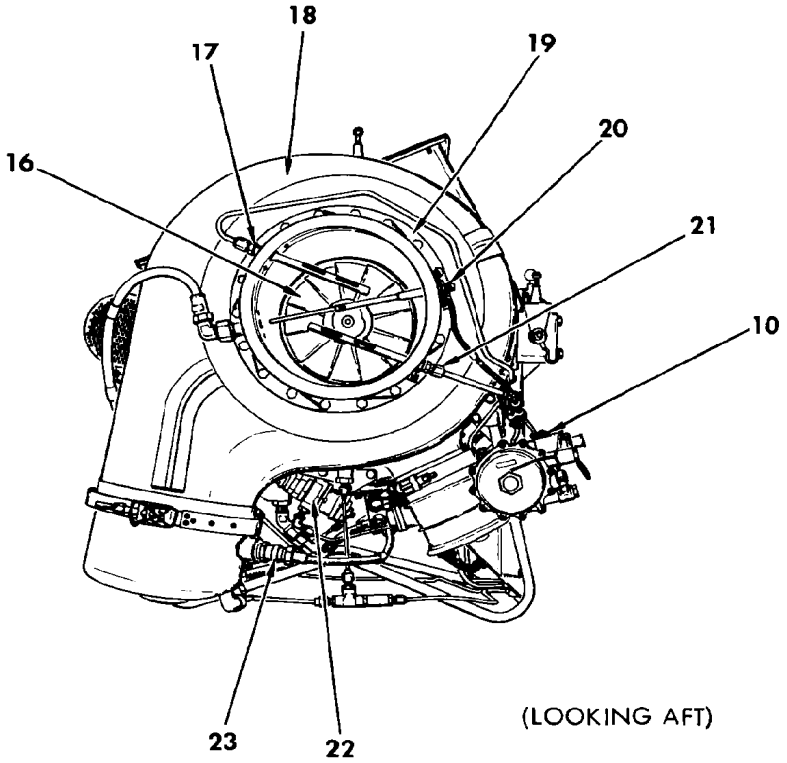

10. BLEED LOAD AND FLOW CONTROL VALVE
16. TURBINE WHEEL
17. BLEED LOAD CONTROL THERMOSTAT
18. TURBINE PLENUM
19. TURBINE EXHAUST FLANGE
20. EGT THERMOCOUPLE
21. ACCELERATION CONTROL THERMOSTAT
22. AIR PRESSURE REGULATING VALVE
23. SPARK IGNITER PLUG

Auxiliary Power Unit (APU) Engine System Components (Sheet 3 of 3)

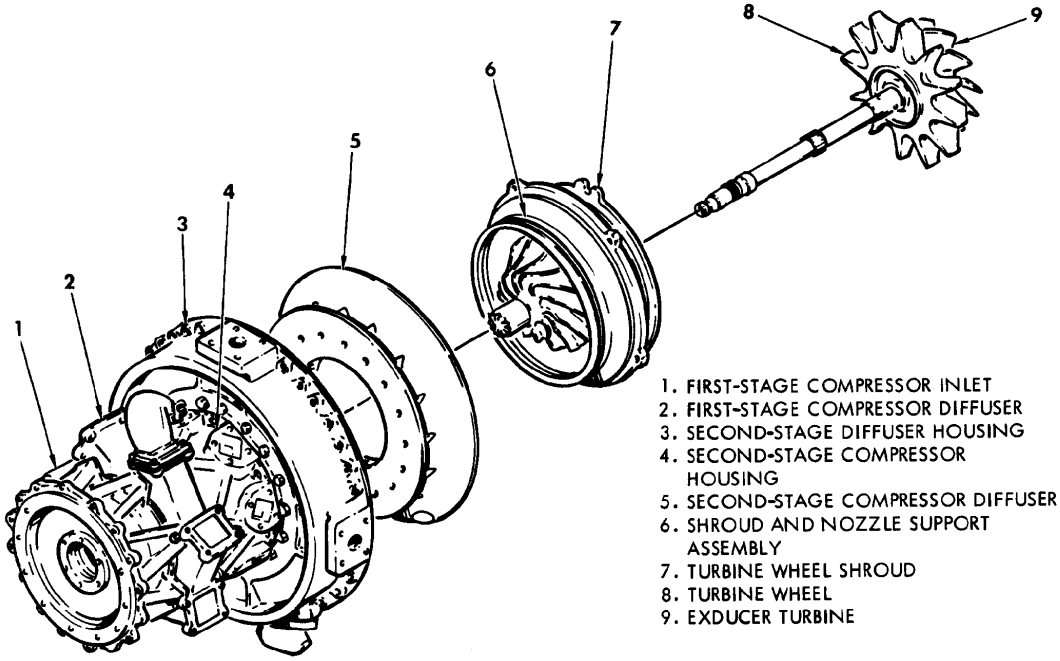

Auxiliary Power Unit (APU) Gas Turbine Engine Compressor and Assembly

Engine Fuel Control Subsystem

The APU fuel and engine fuel control subsystem consists of plumbing and automatically operated regulating components to maintain a near constant power turbine operating speed under varying output bleed air loads. The fuel system's main control unit is a speed sensing governor which regulates the fuel/air mixture in the combustor, which, in turn, limits the power turbine speed. Fuel supply consists of a fuel line routed from the surge box in the No. 2 main tank to the APU. An electrically-operated, motor-driven shutoff valve is located in the fuel supply line at the tank outlet. The APU can operate on aviation fuel, kerosene, or alternate fuels such as JP-4, JP-5, and JP-8. Fuel is gravity fed into the APU fuel system.

The APU fuel system components consist of a dual orificed fuel atomizer and a fuel accessory cluster which, in itself, consists of the fuel pump, fuel filter, pressure relief valve, fuel shutoff valve, acceleration and overtemperature control valve, acceleration limiter, and the constant speed governor. The governor along with the fuel pump, fuel filter, pressure relief valve, fuel shutoff valve, acceleration and overtemperature control valve, and acceleration limiter comprise the fuel accessory cluster mounted on the APU front. The fuel nozzle (atomizer), attached to the combustion chamber cap, sprays fuel into the combustion chamber for combustion. An acceleration and overtemperature control thermostat, located in the turbine exhaust, will trigger a fuel flow reduction, preventing the exhaust temperature from exceeding its limit of 709 degrees C (1310 degrees F).

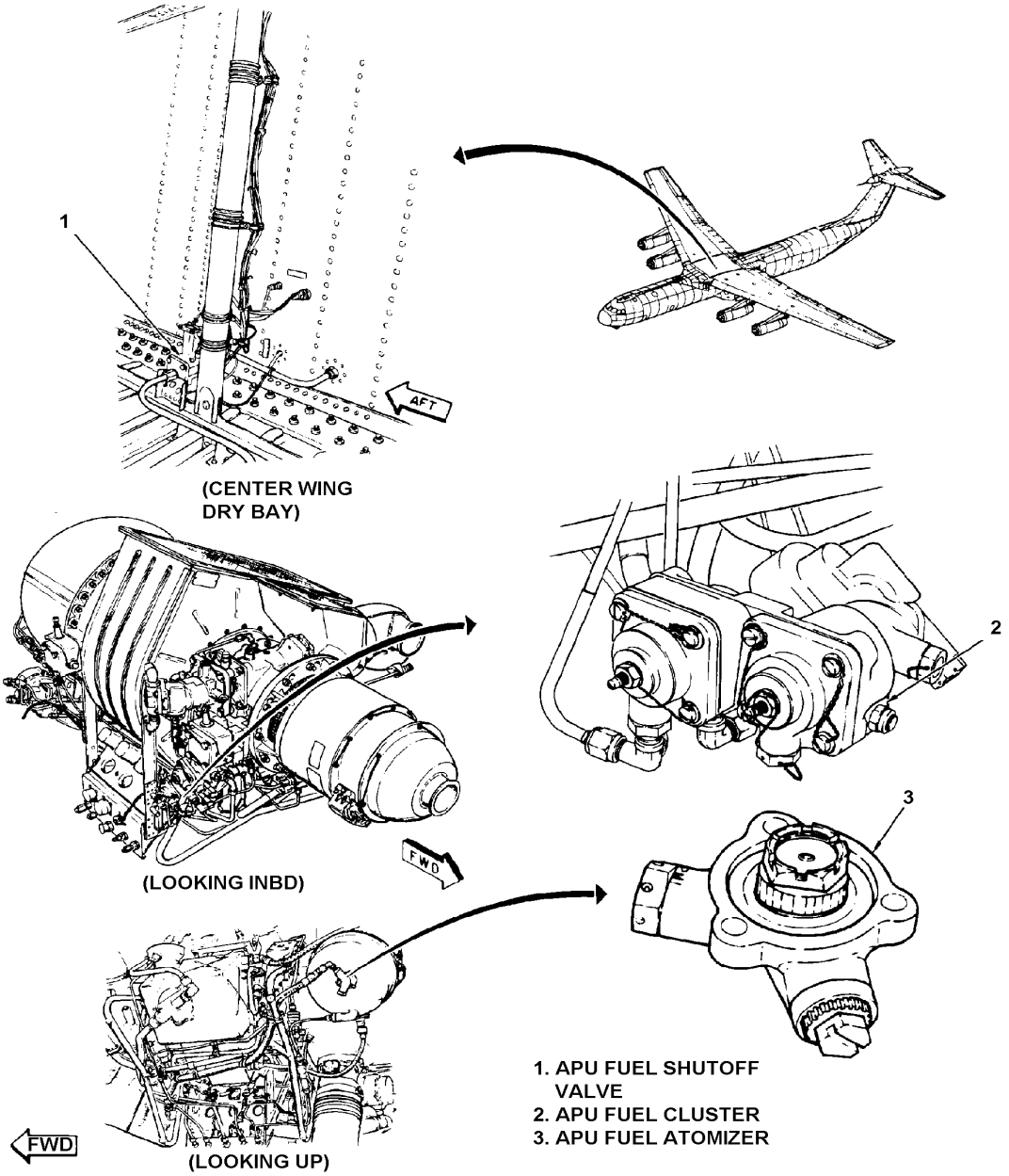

Auxiliary Power Unit (APU) Fuel System Components

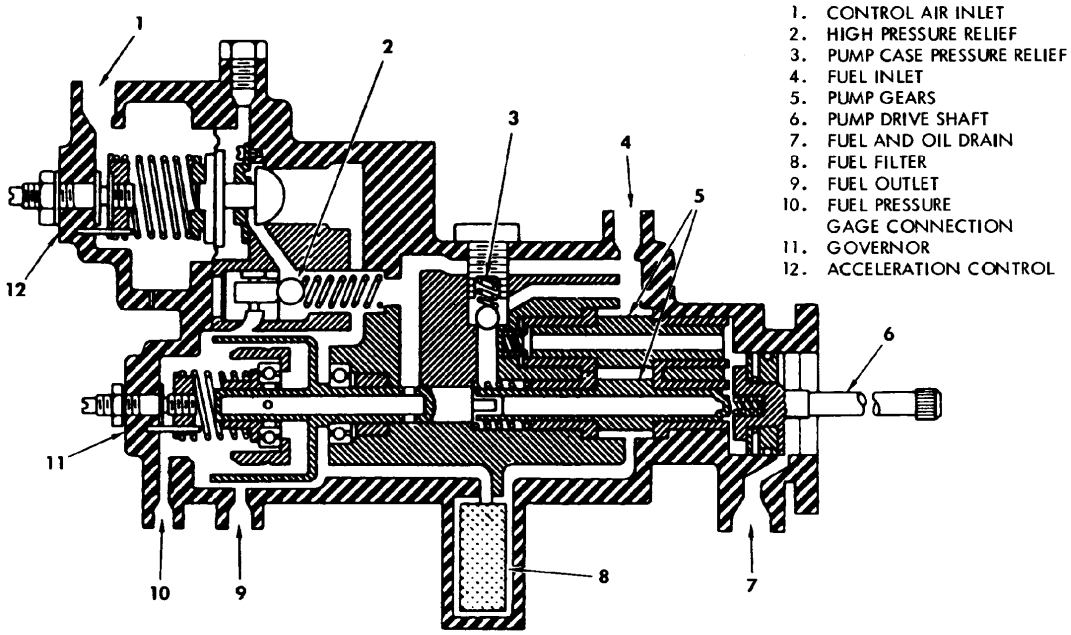

Auxiliary Power Unit (APU) Fuel Cluster Schematic

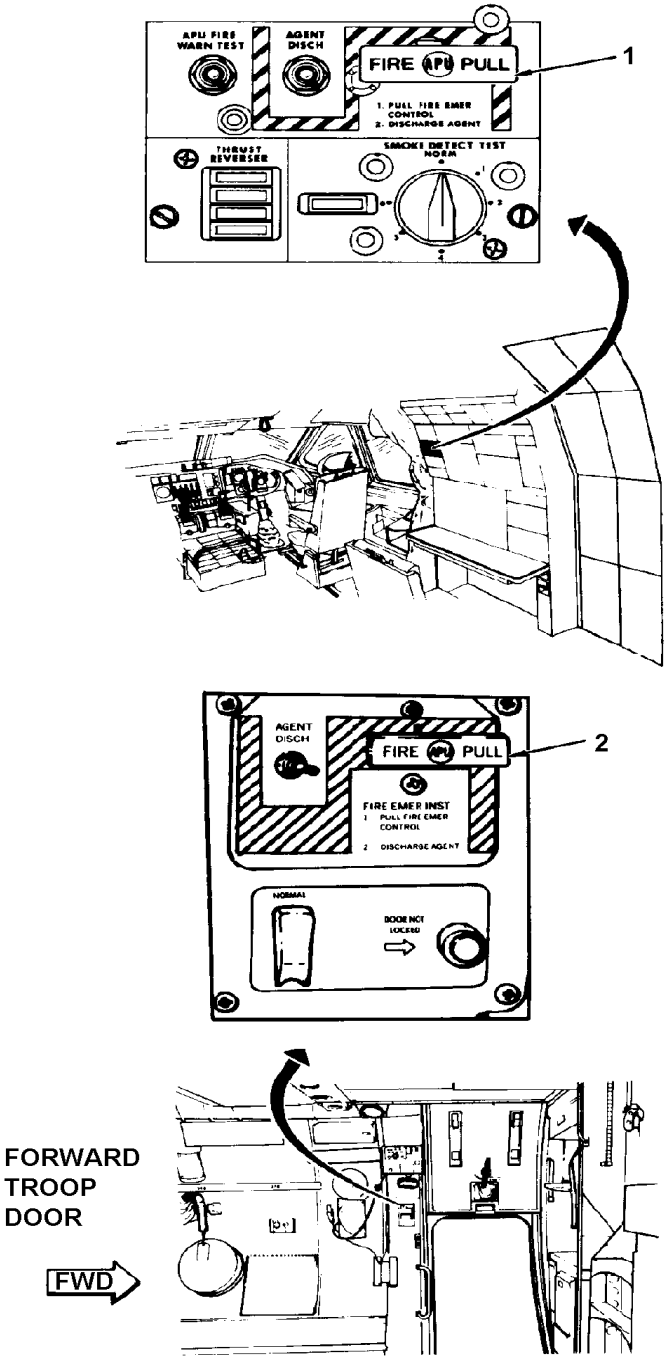

1. FLIGHT ENGINEER'S APU FIRE PULL HANDLE
2. CARGO COMPARTMENT APU FIRE PULL HANDLE

Auxiliary Power Unit (APU) Fuel System Emergency Controls

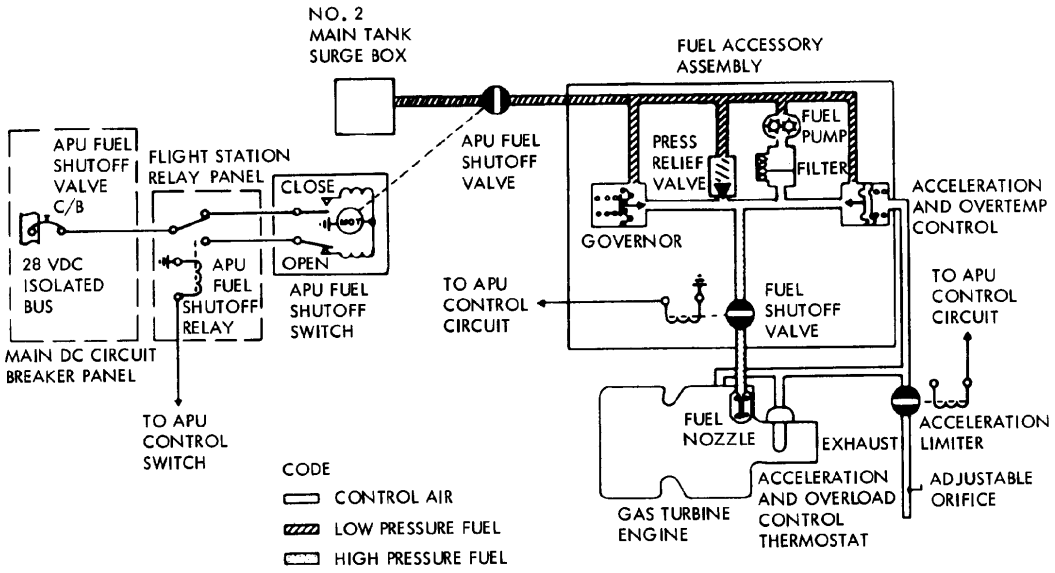

Auxiliary Power Unit (APU) Fuel System Schematic Diagram

Starting/Ignition Subsystem

The APU hydraulic starting subsystem components include two accumulators, a starter motor, check valve, flow regulator, and associated plumbing. The starter motor and attaching tubes are the only starting components located on the APU. Remaining starting components are located in the cargo compartment adjacent to the APU. The airplane's No. 3 hydraulic system charges the two accumulators. One or both of the accumulators can be used for starting purposes depending on how full the accumulators are charged and the atmospheric temperature.

Hydraulic fluid flows through two solenoid valves and a flow regulator enroute to the starter. The motor cranks to a speed of approximately 9000 rpm, which is above the APU's self-sustaining speed. The starting system accelerates the APU to a self-sustaining speed in less than 10 seconds. The starter motor mounts on the starter adapter. Containing an override clutch, the adapter prevents reverse torque and causes the starter to remain stationary during normal APU operation.

The APU ignition system consists of one igniter plug and one ignition unit, and a hydraulic motor powered by two accumulators. The APU electrical control system energizes and de-energizes the ignition system. During the starting cycle, the plug and ignition unit ignite the fuel and air mixture. The unit will not energize, however, unless the oil pressure sequencing switch senses 3.5 psi oil pressure to close its contacts. The centrifugal switch assembly de-energizes the ignition system when the APU exceeds 95 percent rpm.

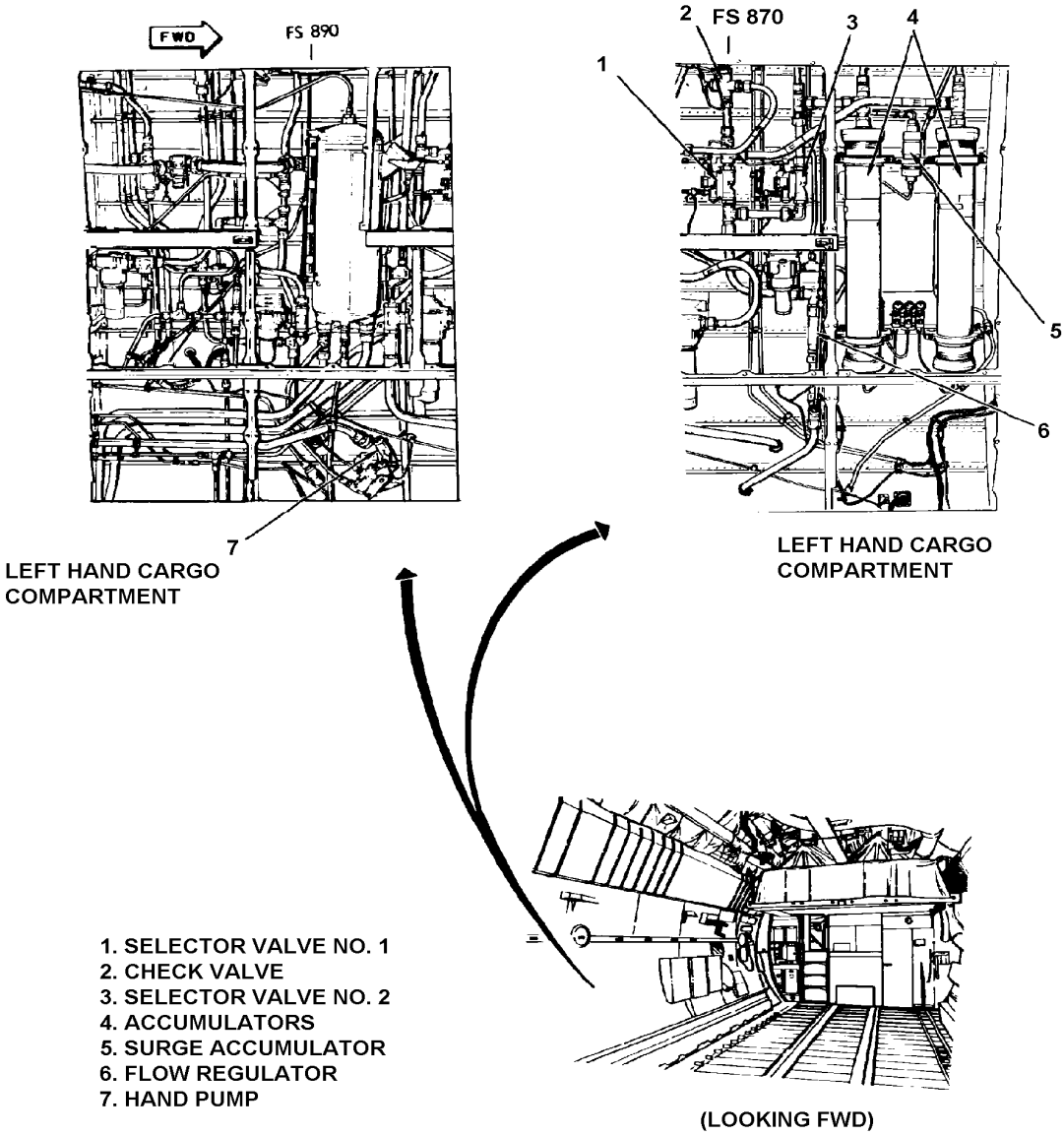

Auxiliary Power Unit (APU) Starting System Components (Sheet 1 of 2)

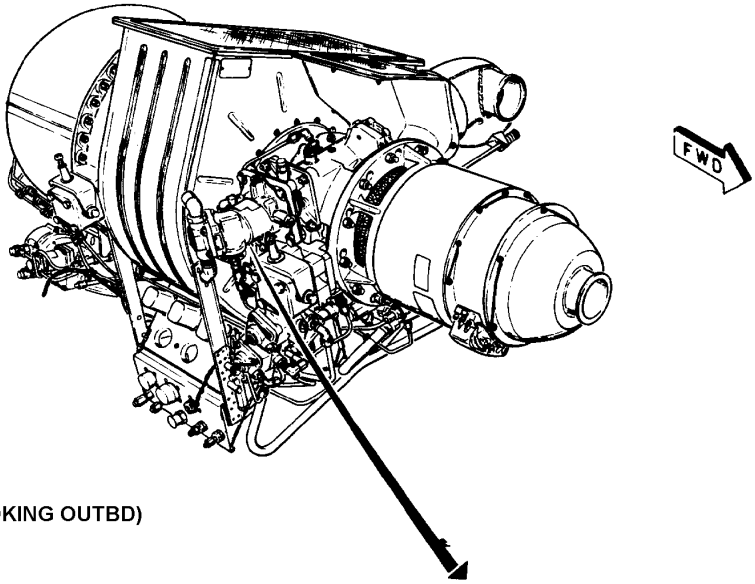

(LOOKING OUTBD)

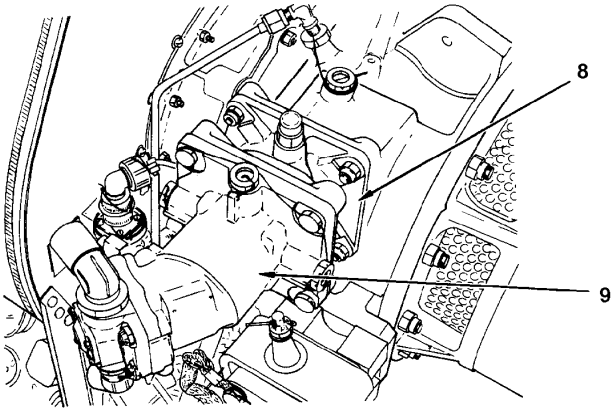

8. STARTER ADAPTER (CLUTCH)
9. HYDRAULIC STARTER

Auxiliary Power Unit (APU) Starting System Components (Sheet 2 of 2)

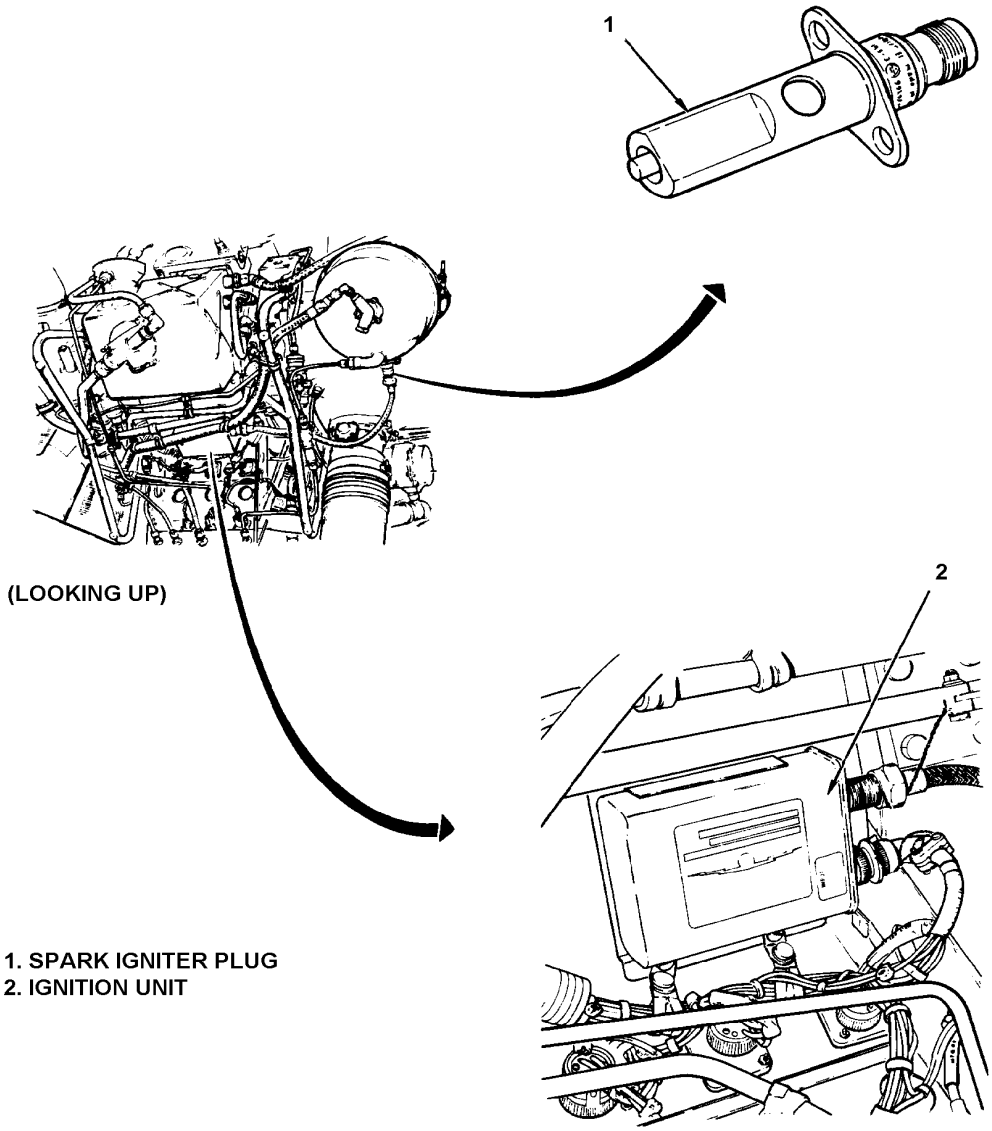

1. SPARK IGNITER PLUG
2. IGNITION UNIT

Auxiliary Power Unit (APU) Ignition System Components

Bleed Air Subsystem

The APU bleed air system controls the mass air flow across the turbine. Excessive bleed air results in low mass airflow through the combustion section in relation to fuel flow and vice versa. The turbine wheels energy extraction is kept relatively constant by burning fuel, as required, to compensate for mass air flow change. A bleed shutoff and load control valve controls the bleed air which flows through the turbine. The valve serves as a positive shutoff or opening between the APU compressor discharge and bleed air. Compressor discharge, under varying load condition (including an overload), is controlled by the valve, depending on turbine exhaust gas temperature (EGT). The bleed shutoff and load control valve assembly attaches to the compressor bleed duct and consists of a butterfly-type valve located in the bleed duct, a pneumatic-type valve actuator and load rate control valve, a bleed control solenoid valve, and an air pressure regulator. A bleed load control thermostat, which is connected to the control air pressure line, is located in the turbine exhaust. The pre-set thermostat prevents turbine EGT from exceeding 675 degrees C (1247 degrees F).

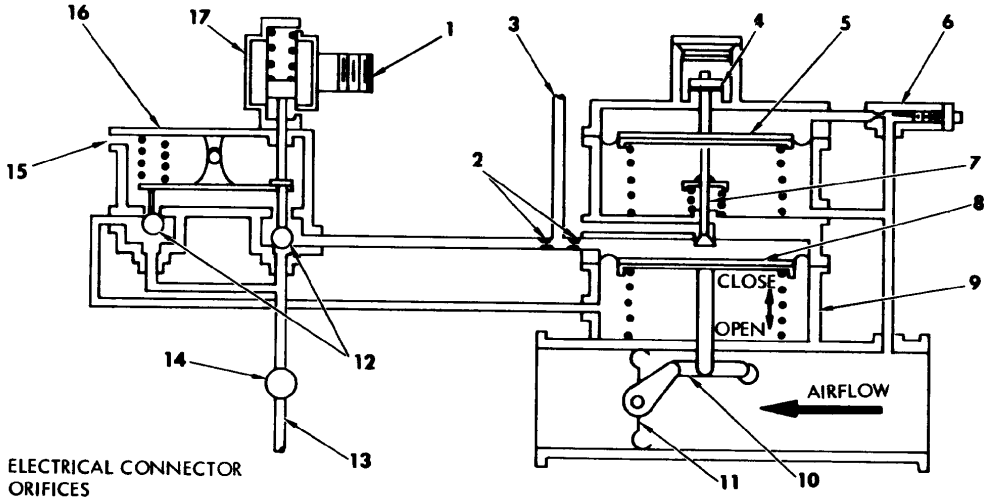

1. ELECTRICAL CONNECTOR
2. ORIFICES
3. CONNECTION TO EXHAUST GAS THERMOSTAT
4. RATE CONTROL DIAPHRAGM STOP
5. RATE CONTROL DIAPHRAGM
6. RATE CONTROL ADJUSTMENT
7. POPPET VALVE
8. ACTUATOR DIAPHRAGM
9. ACTUATOR
10. TOGGLE LINKAGE
11. BUTTERFLY VALVE
12. SWITCHER BALLS
13. CONNECTION TO COMPRESSOR DISCHARGE
14. PRESSURE REGULATOR
15. VENT
16. SWITCHER VALVE
17. SOLENOID

Auxiliary Power Unit (APU) Bleed Load and Flow Control Valve Schematic

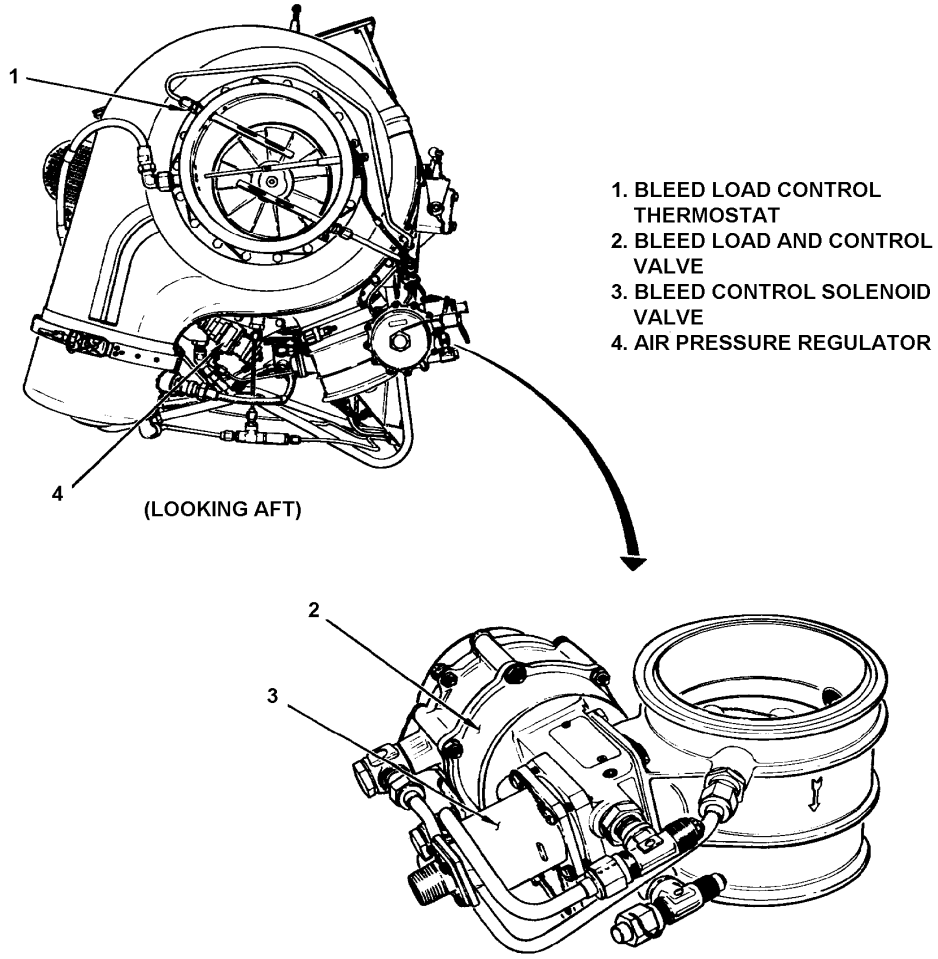

Auxiliary Power Unit (APU) Bleed Air System Components

Control Subsystem

The APU Control System provides electrical, automatic control of the engine during starting and operation. The APU control panel, located at the flight engineer's station, consists of three toggle switches, a rotary switch, one gage, and three annunciator lights. The APU CONT switch is a spring-loaded, three-position, rotary switch with OFF, RUN, and START positions. Three annunciator lights indicating APU door NOT CLOSED, START, and ON SPEED are also mounted on the control panel. The turbine exhaust gas temperature gage is the only APU control panel instrument. The APU emergency control panel directly below the control panel consists of an APU FIRE PULL handle and two toggle switches: APU FIRE WARN TEST switch and AGENT DISCH switch. An additional fire handle and agent discharge switch panel is located in the cargo compartment just aft of the forward crew entrance door. The APU control circuit receives electrical power through the APU fire pull handle (placed in normal position), intake door open microswitches, and touchdown relay. The APU control circuit prevents the APU from being started except when the airplane is on the ground with both APU fire pull handles in normal positions and intake door open.

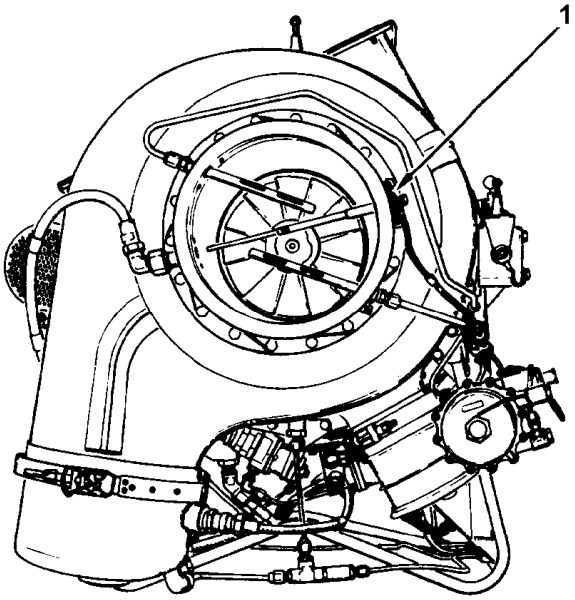

(LOOKING AFT)

1. EGT THERMOCOUPLE

Auxiliary Power Unit (APU) Exhaust Gas Temperature (EGT) Component

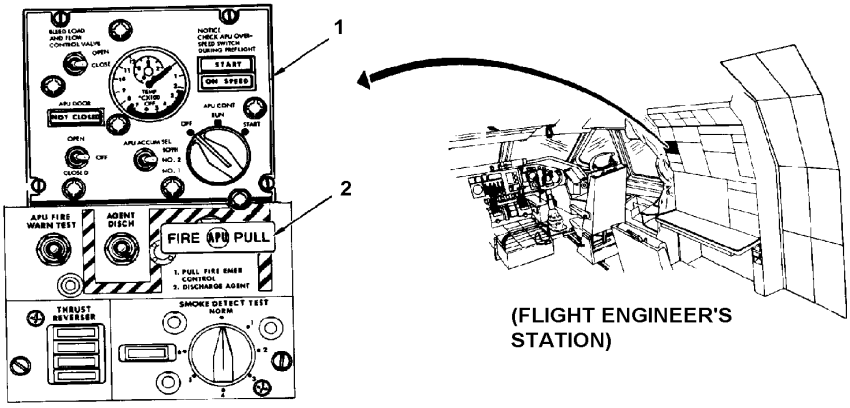

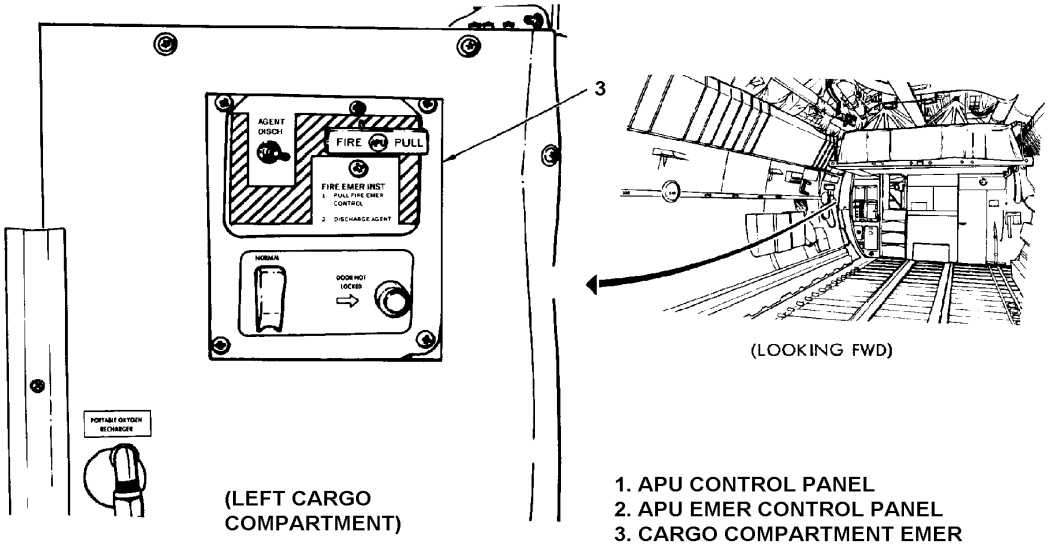

1. APU CONTROL PANEL
2. APU EMER CONTROL PANEL
3. CARGO COMPARTMENT EMER CONTROL PANEL

Auxiliary Power Unit (APU) Controls and Indicators

Oil Subsystem

The APU lubricating system is a self-contained, positive pressure, dry sump type oil system. The oil system provides lubrication for all turbine and accessory section gears and bearings. The oil system uses MIL-L-23699 oil. An oil pump, tank, pressure regulating valve, oil filter, air-oil cooler, and pressure switches comprise the oil system. Oil pumped from the tank by the oil pump flows through the oil filter to various lubricating points. A system relief valve maintains pressure, and a duplex scavenge pump removes oil from the accessory section and the turbine case. The oil is then pumped to the oil cooler and back to the tank. A high oil temperature switch is located downstream of the oil filter which will shut down the APU if the oil temperature reaches 255 degrees F (124 degrees C).

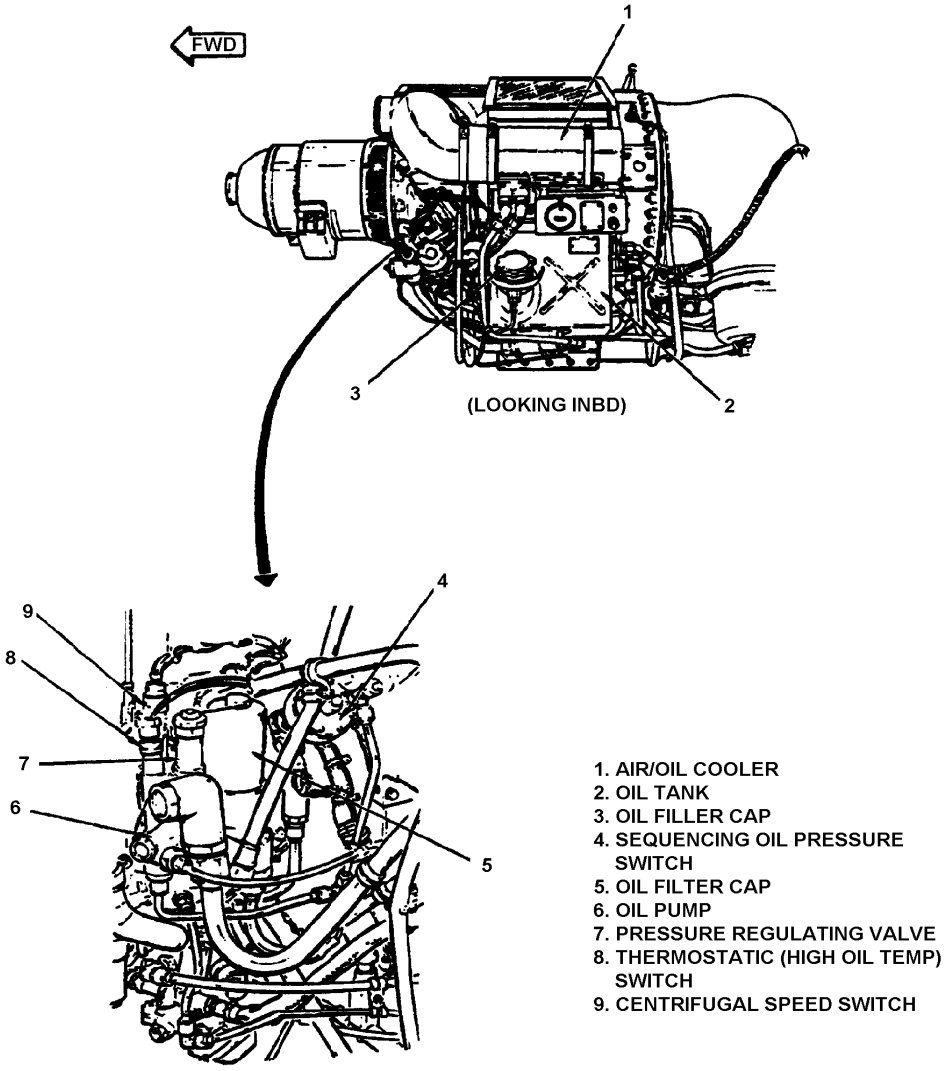

Auxiliary Power Unit (APU) Oil system Components (Sheet 1 of 2)

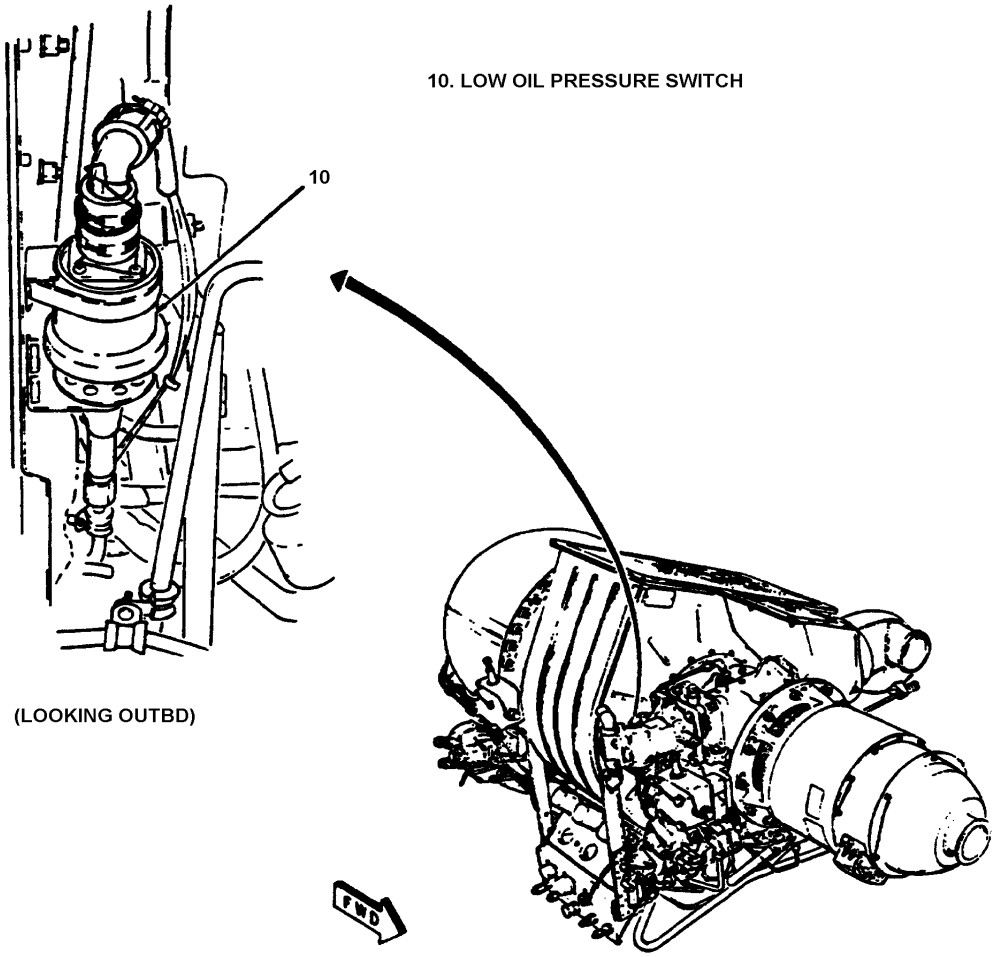

Auxiliary Power Unit (APU) Oil system Components (Sheet 2 of 2)

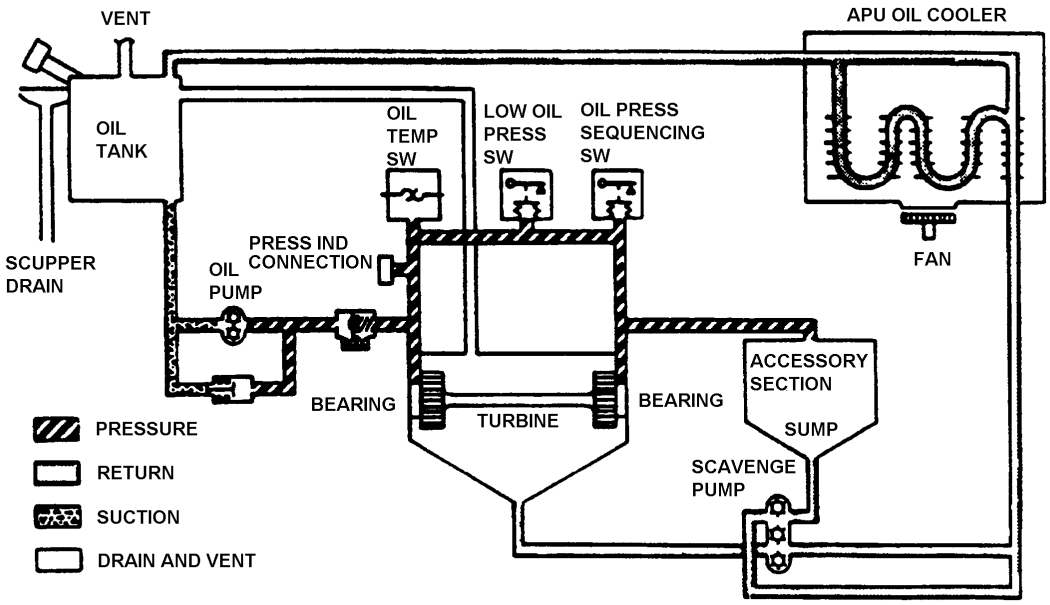

Auxiliary Power Unit (APU) Oil System Schematic Diagram

NOTES

STRUCTURES

Refer to T.O. 1C-141B-2-51JG-00-1 (Structures) for an explanation of the following various C-141B structure maintenance procedures:

I. Fuselage Structure Maintenance Procedures

a. Removal and installation of nose wheel well pressure diaphragm access doors

b. Removal and installation of main landing gear (MLG) actuator aft support structure

c. Removal and installation of petal door hinge

II. Pylon Structure Maintenance Procedures

a. Removal and installation of engine mount fittings on pylons

b. Removal and installation of forward beam pylon insulating collar

c. Removal and installation of pylon

III. Stabilizer Structure Maintenance Procedures

a. Removal and installation of vertical stabilizer attachment bolts

b. Removal and installation of horizontal stabilizer leading edge

IV. Wing Structure Maintenance Procedures

a. Inspection of wing joint tension bolts

b. Removal and installation of wing joint tension bolts

c. Removal and installation of leading edge blowout and vapor barrier doors

d. Allowable limits of missing fasteners from wing leading edge sections (between periods of major inspections)

e. Removal and installation of wing leading edge

f. Removal and installation of wing tip

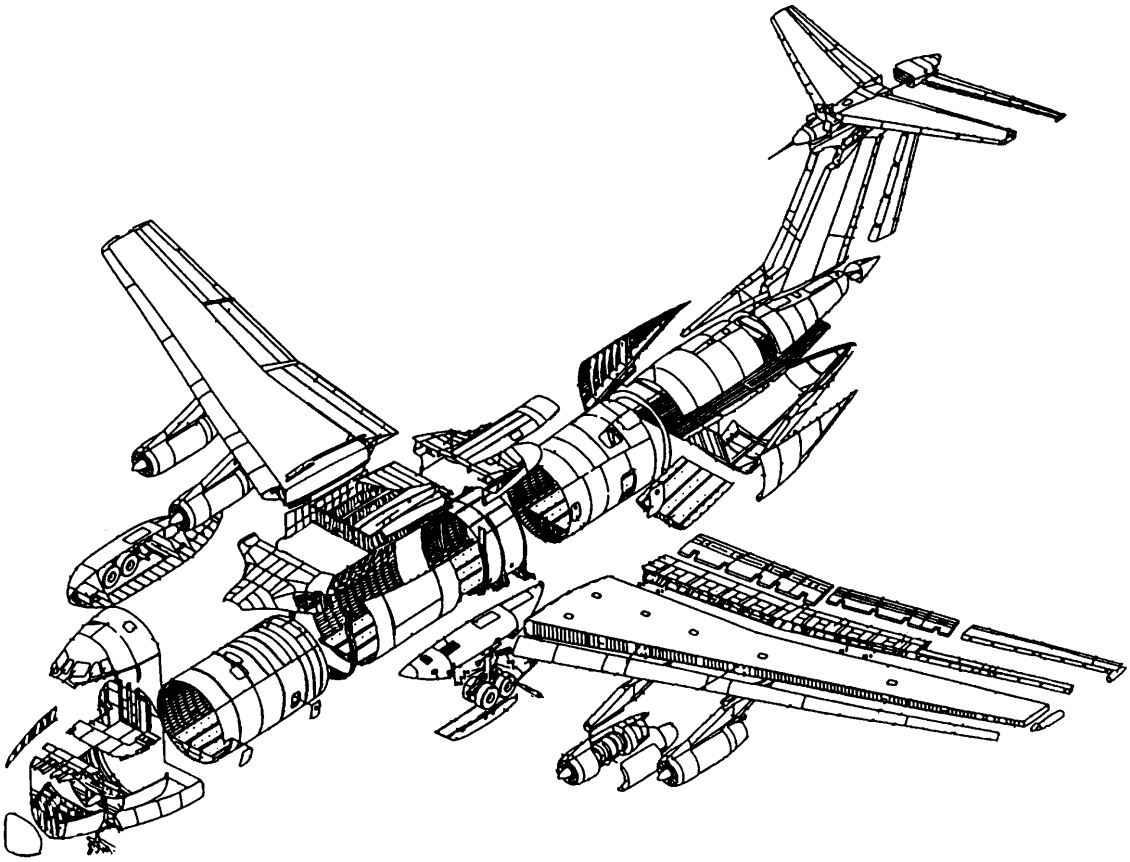

General Airframe Structural Breakdown

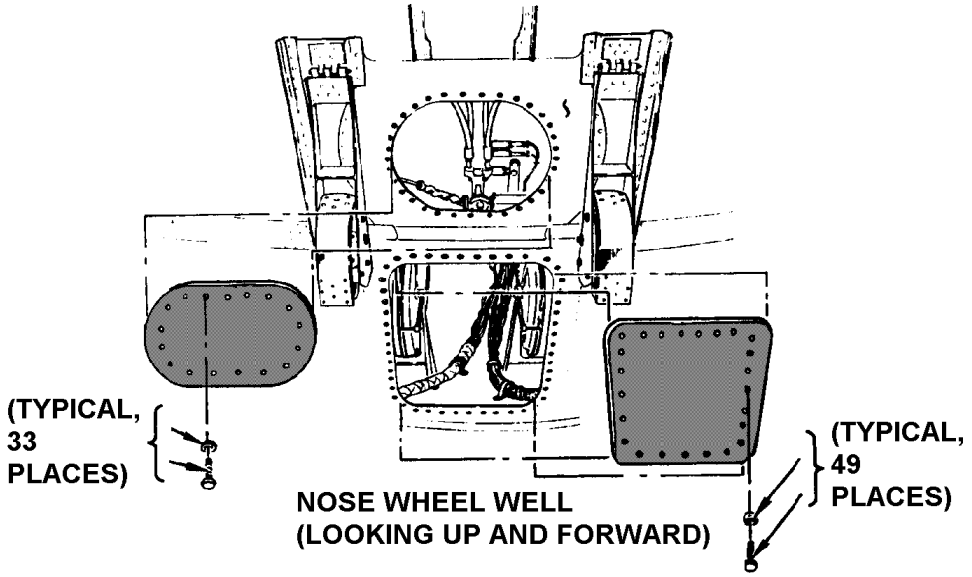

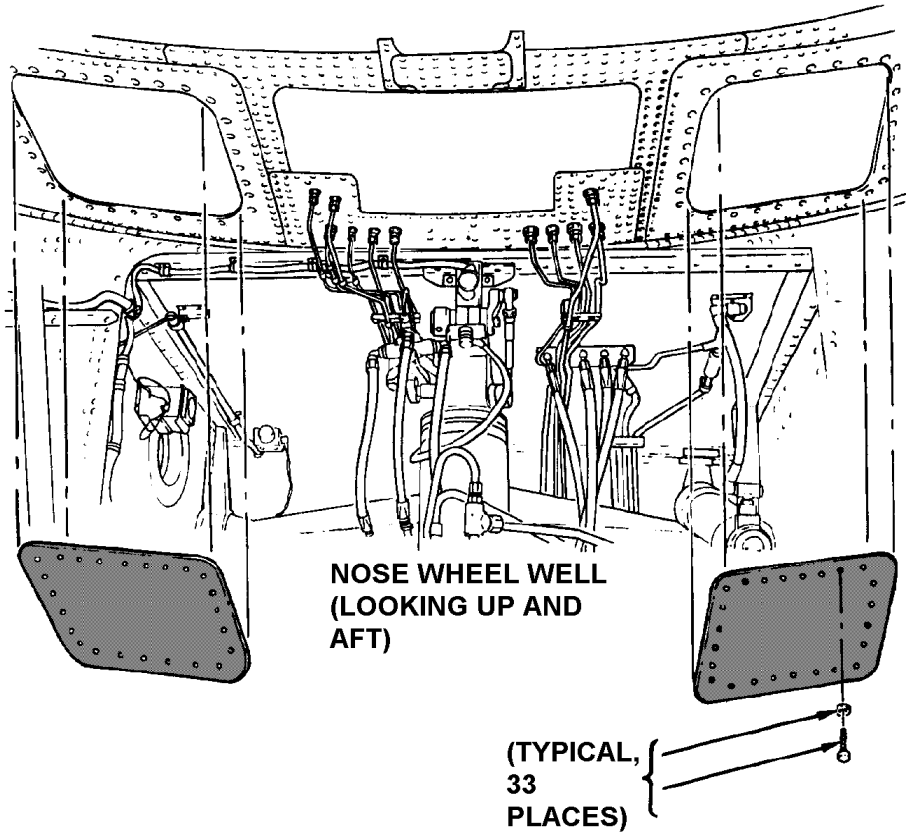

Nose Wheel Well Pressure Diaphragm Access Doors

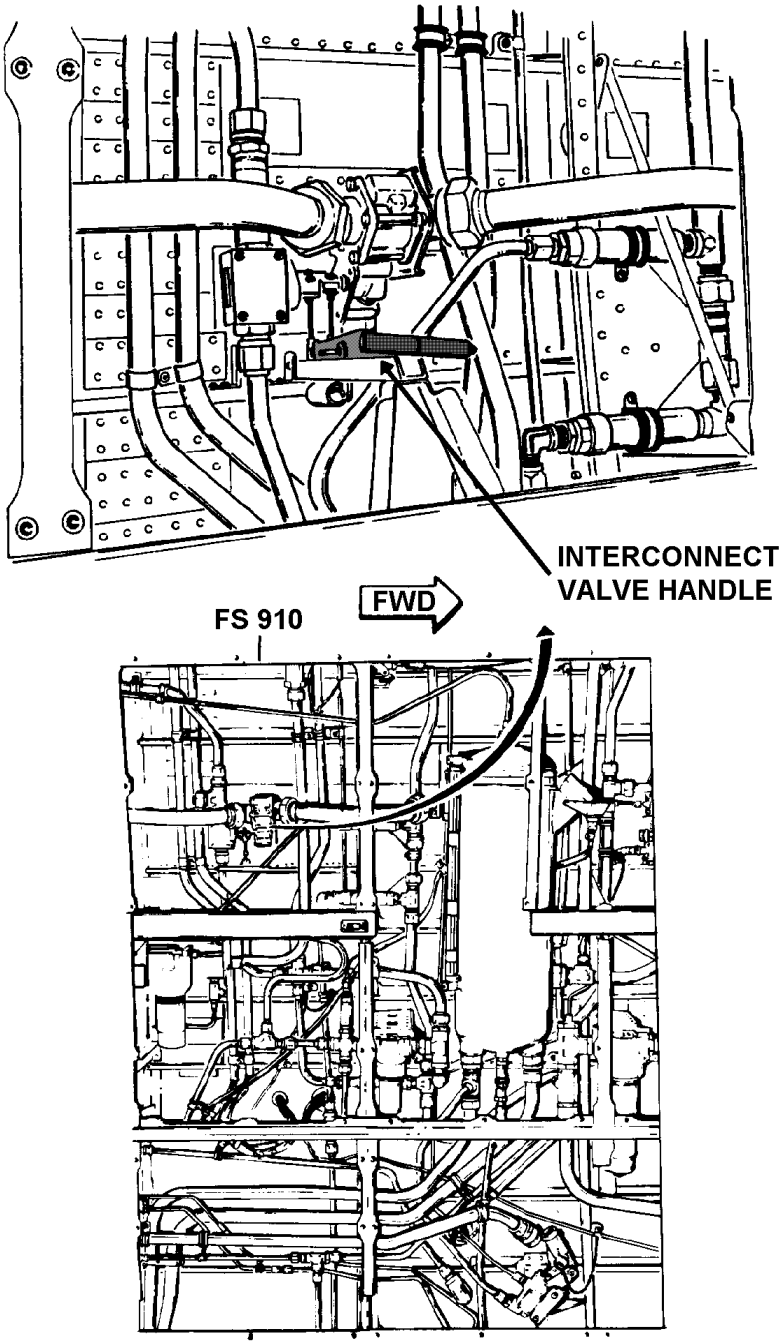

LH SIDE CARGO COMPARTMENT

Hydraulic Interconnect Valve Handle

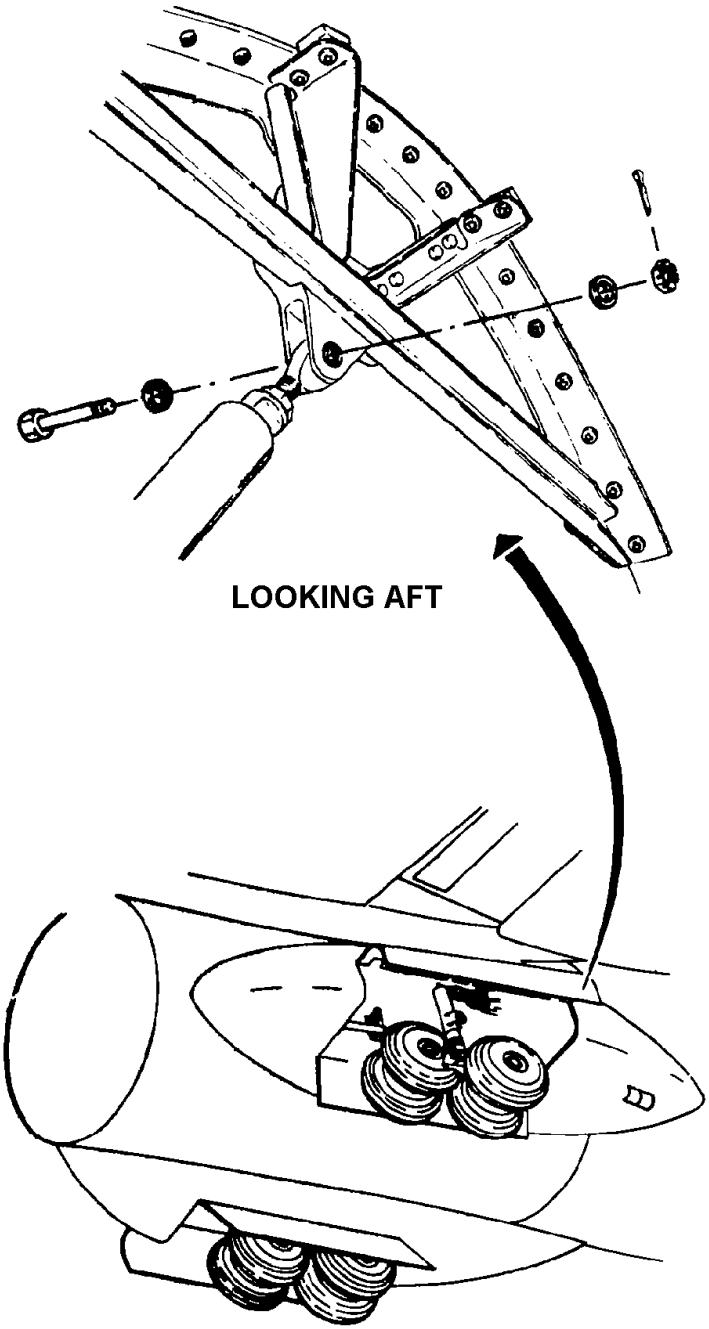

Main Landing Gear (MLG) Door Aft Support Structure

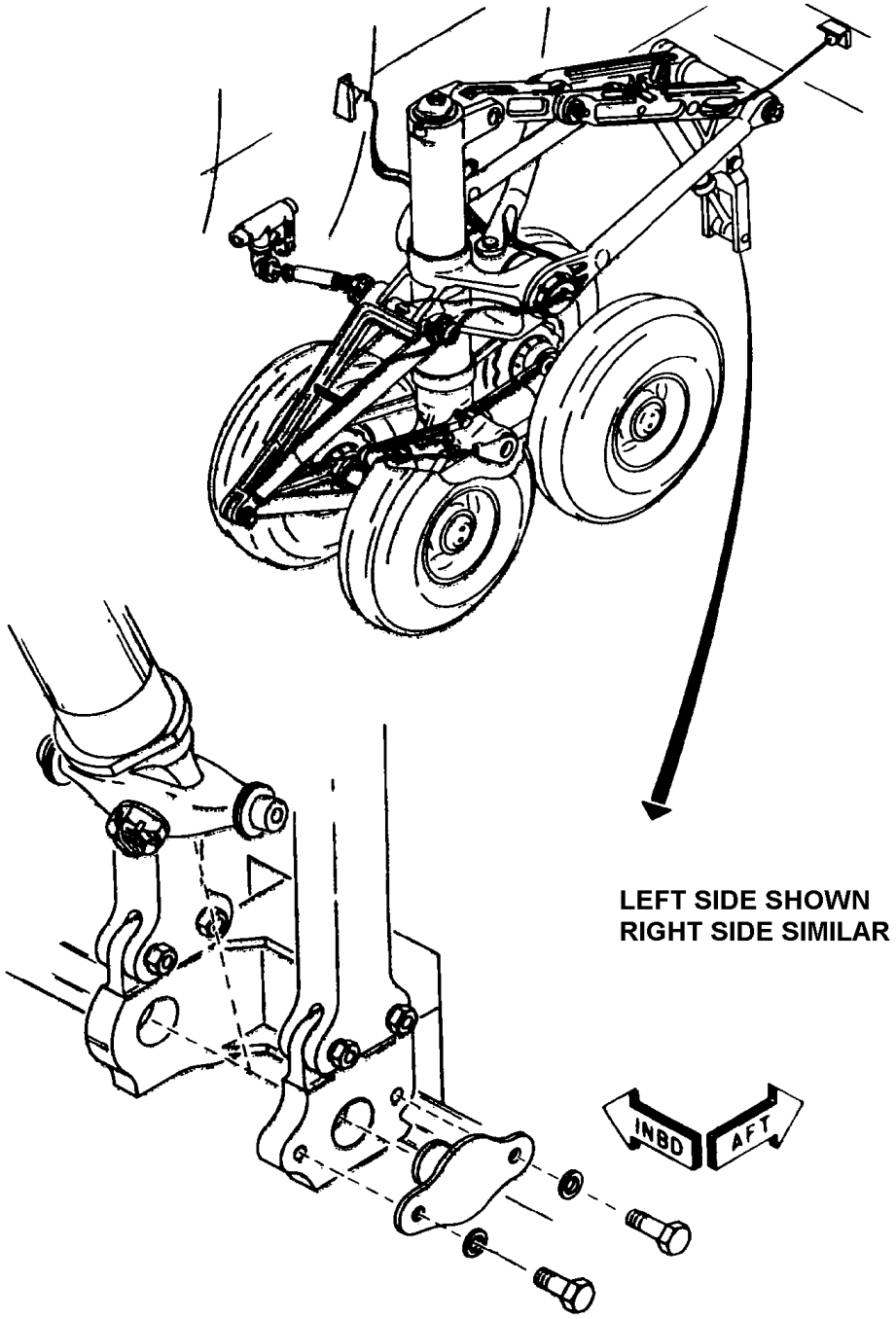

Main Landing Gear (MLG) Actuator Aft Support Structure

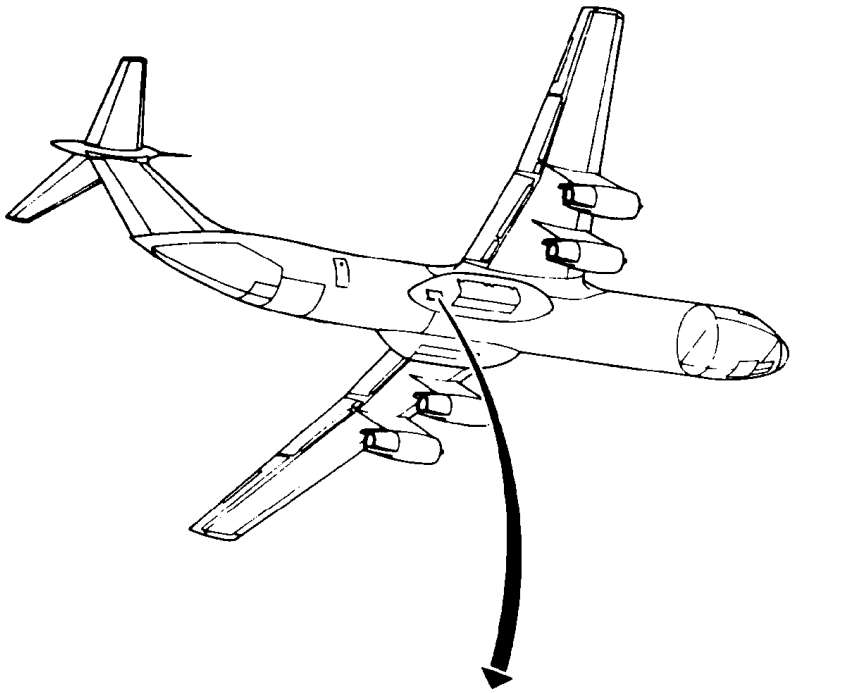

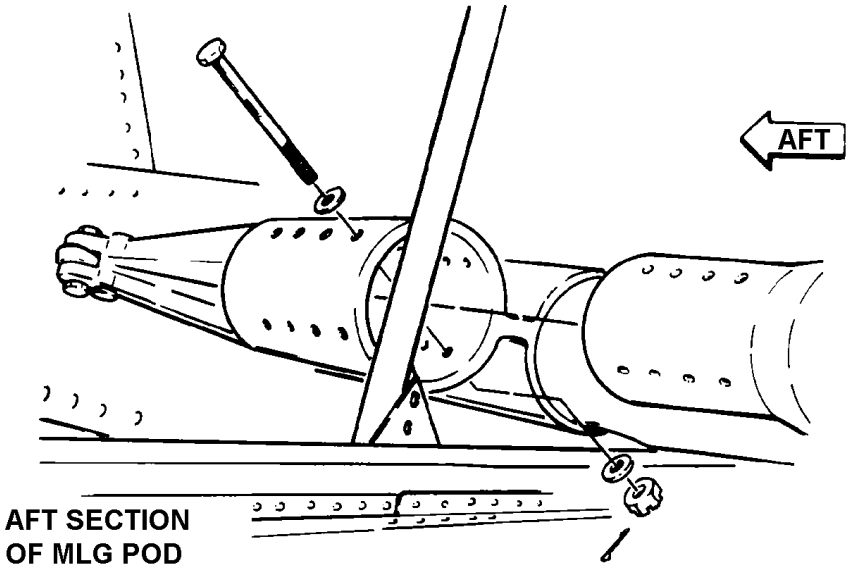

AFT SECTION
OF MLG POD
(LOOKING INBD)
RH SIDE SHOWN,
LH SIDE SIMILAR

Lower Tube Brace

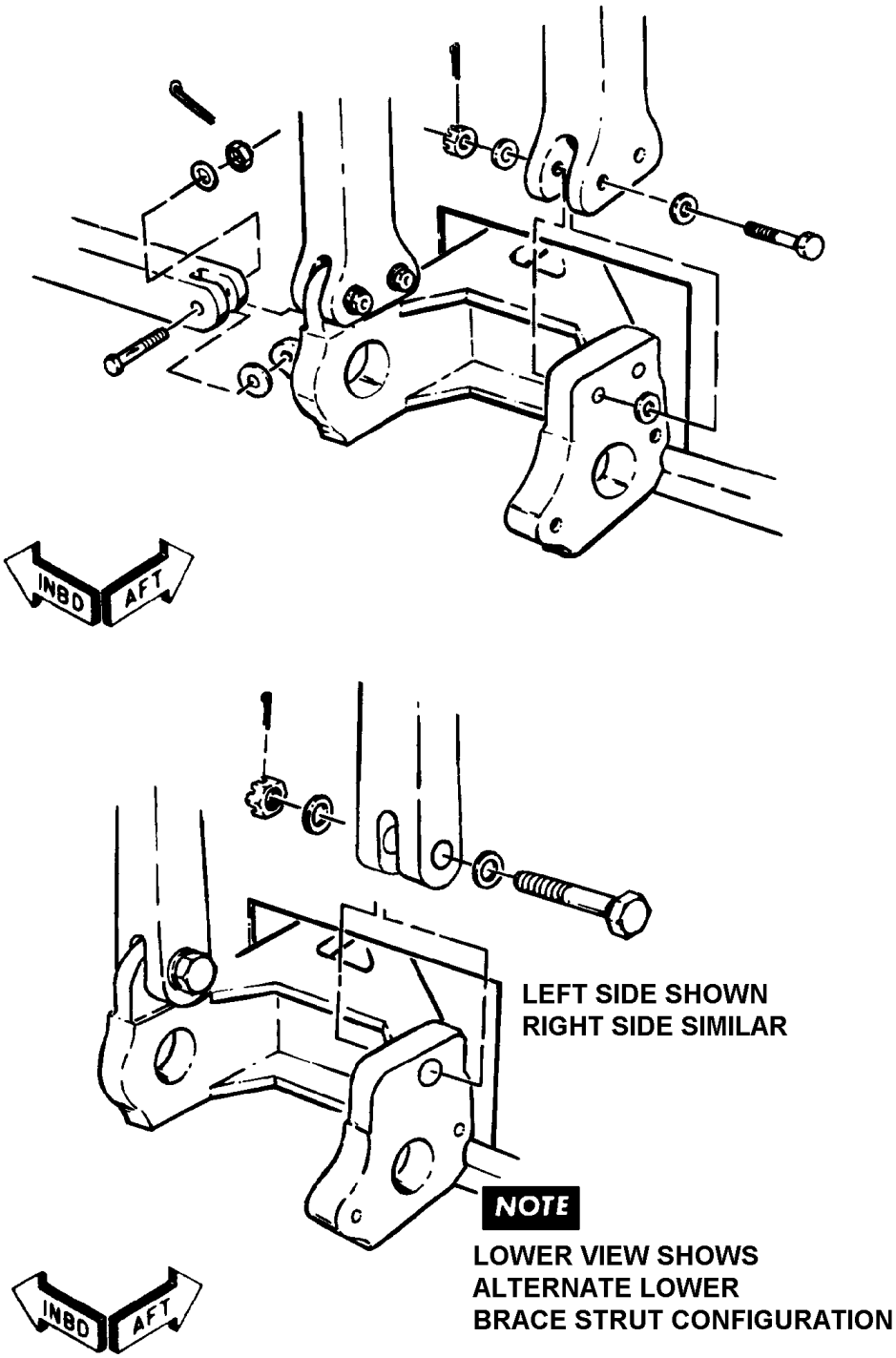

Lower Strut Braces

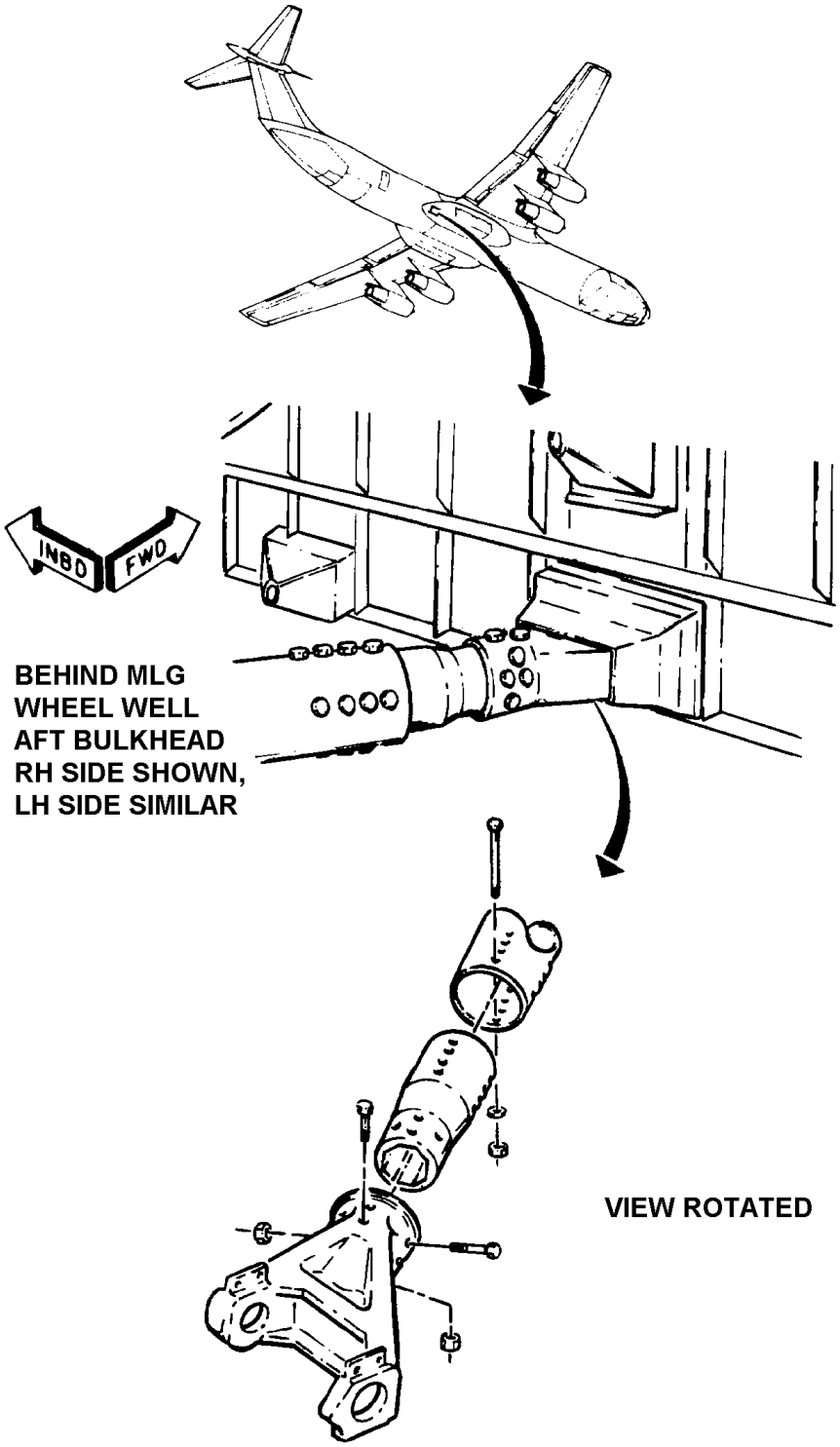

Lower Tube Brace and Yoke Assembly

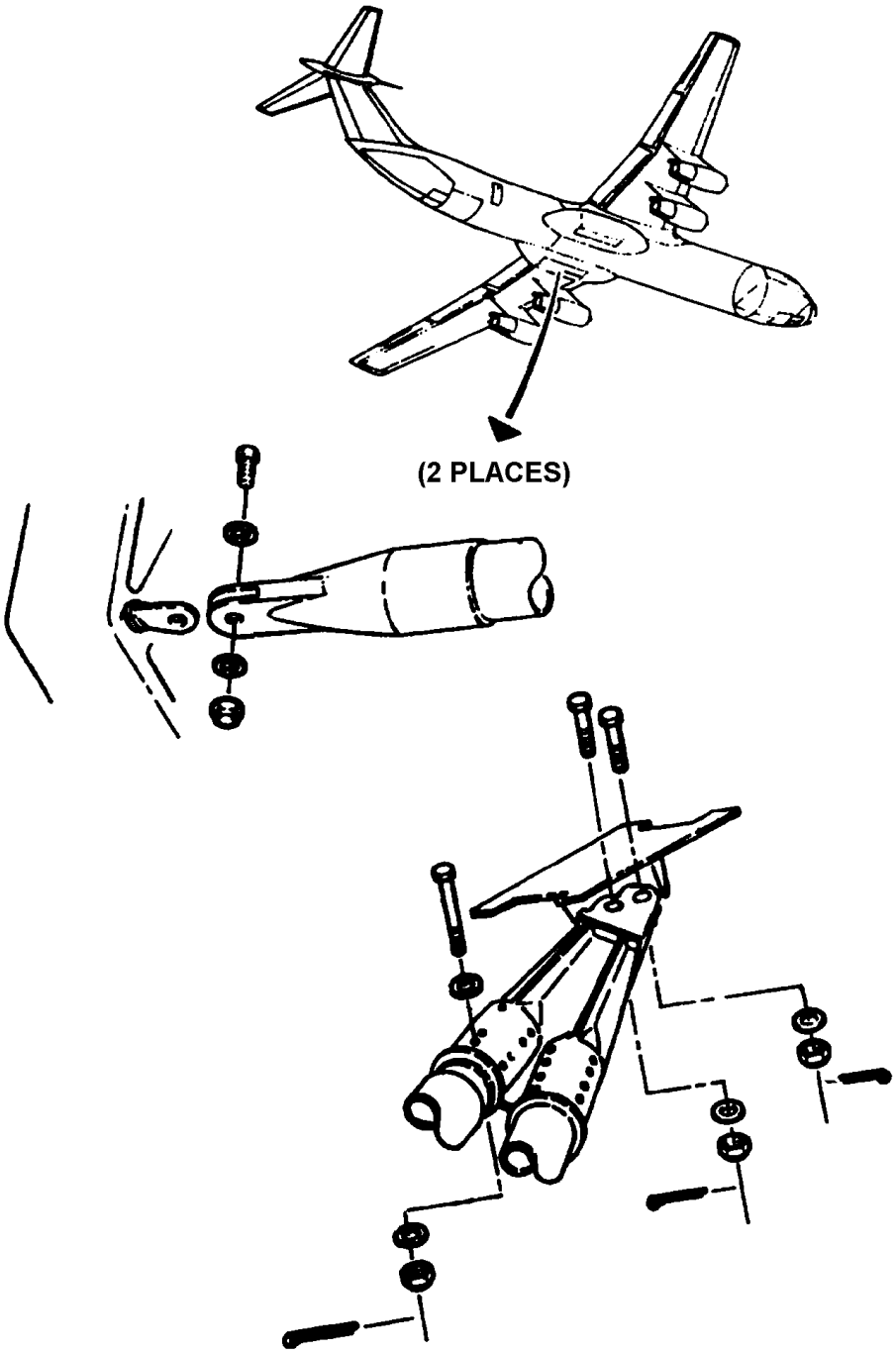

Lower Tube Brace Assembly and Aft Structure Brace Fitting

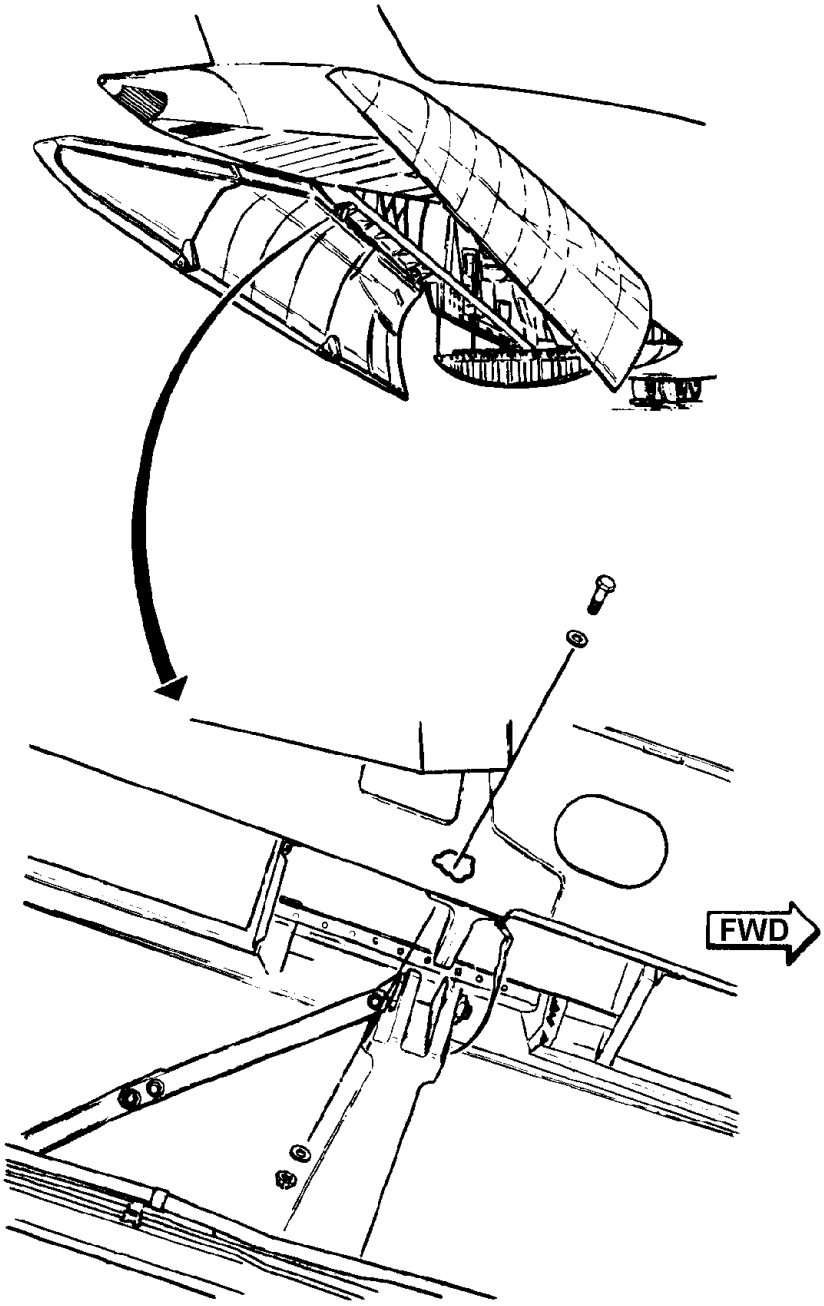

(LOOKING OUTBD)

Petal Door Hinge Assembly

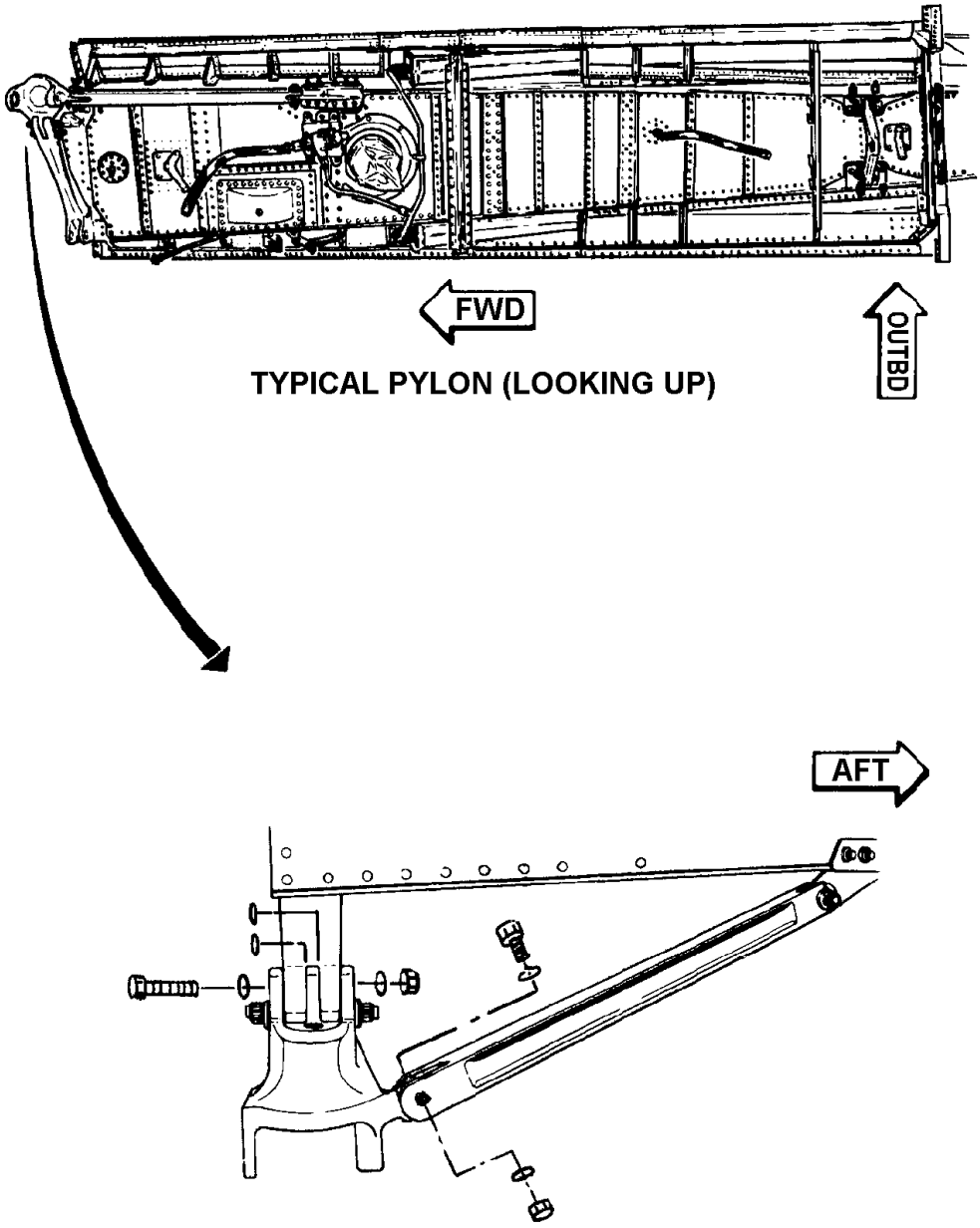

Engine Pylon and Forward Mount Fitting

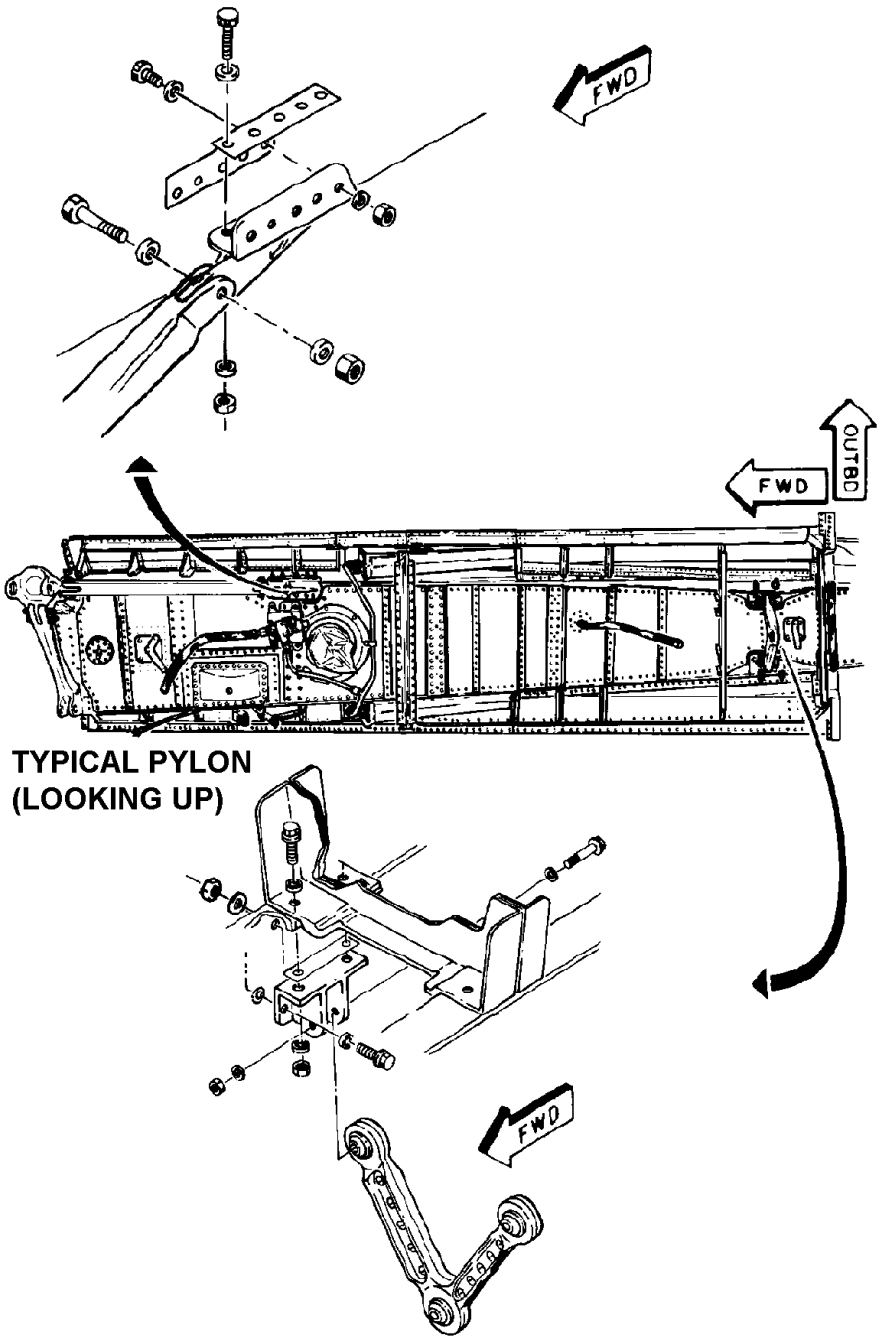

Engine Pylon and Aft Mount Fittings

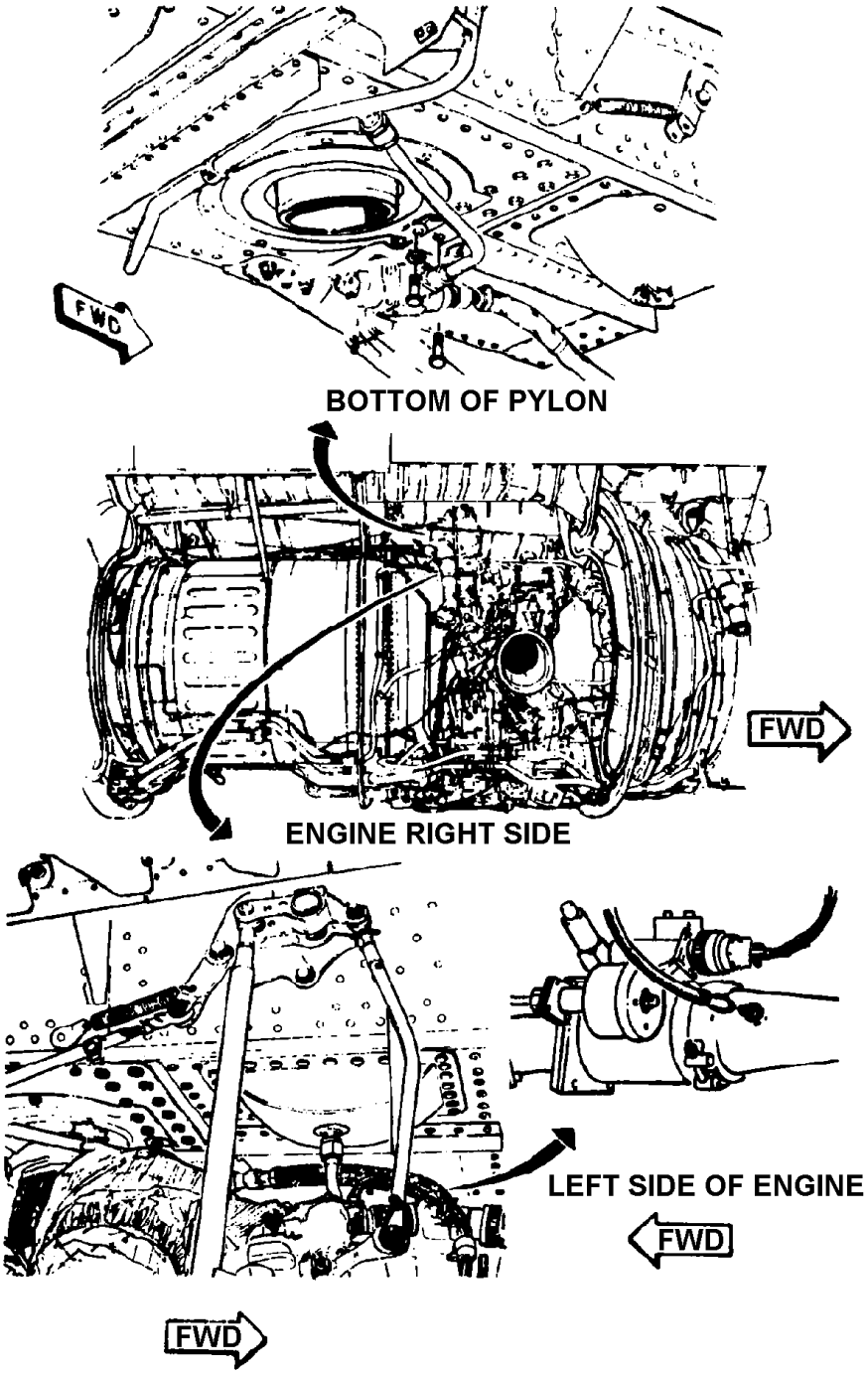

Forward Beam Pylon Insulating Collar

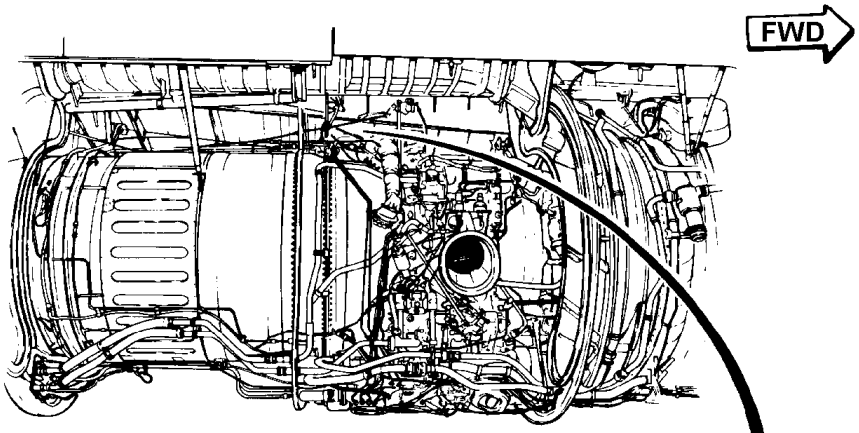

ENGINE RIGHT SIDE

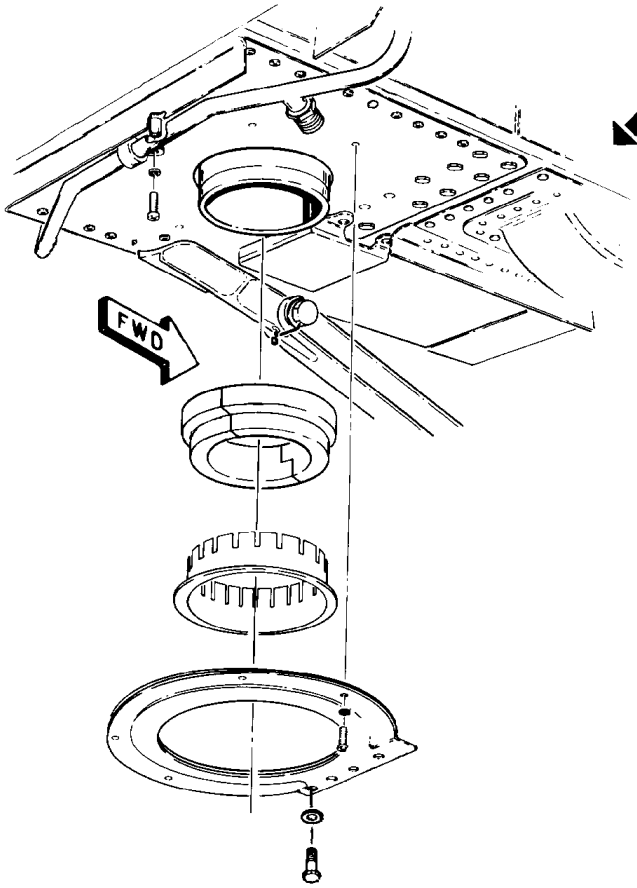

BOTTOM OF PYLON

Forward Beam Pylon Insulating Collar

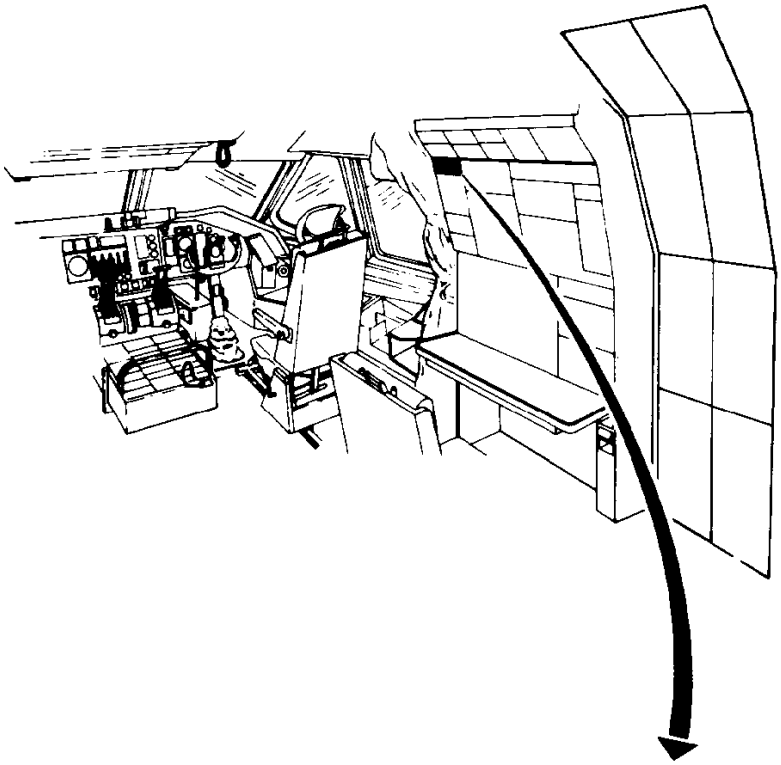

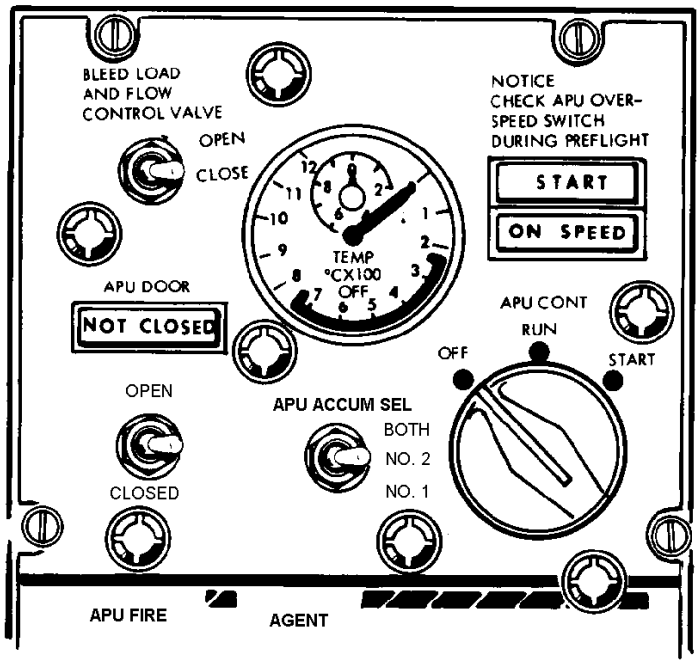

Auxiliary Power Unit (APU) Control Panel

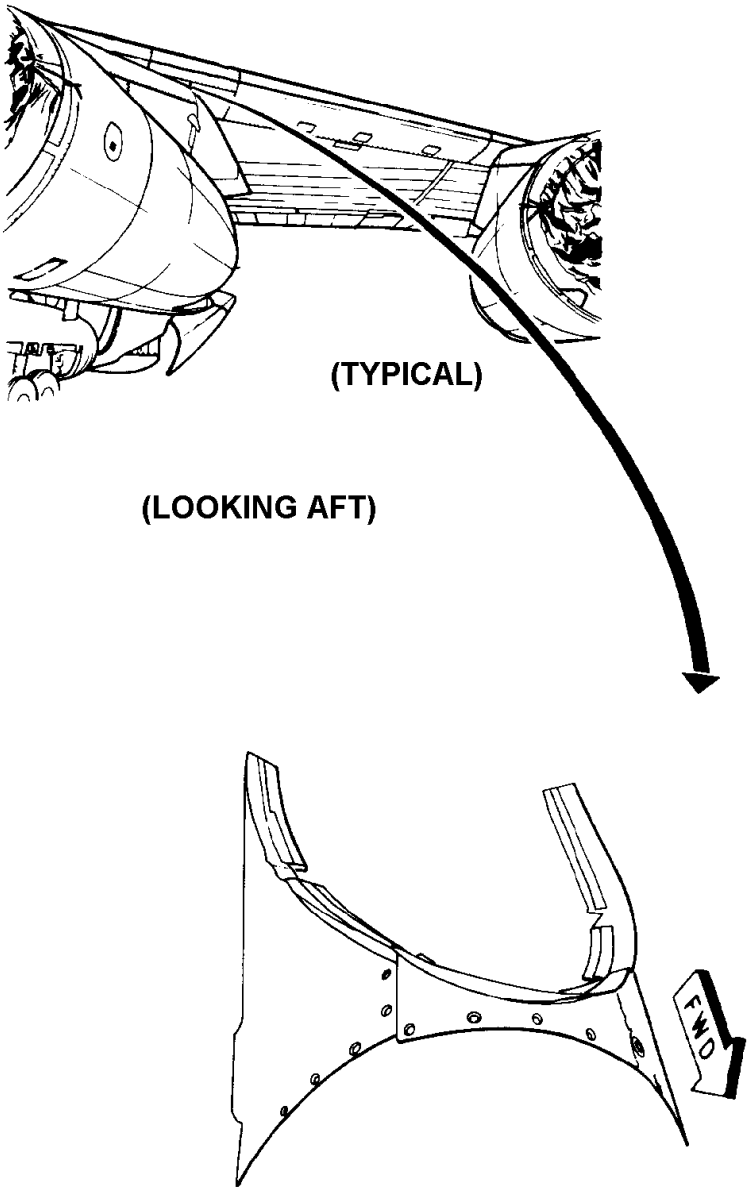

Wing Leading Edge Fairings (Pylon-to-Wing Fairings)

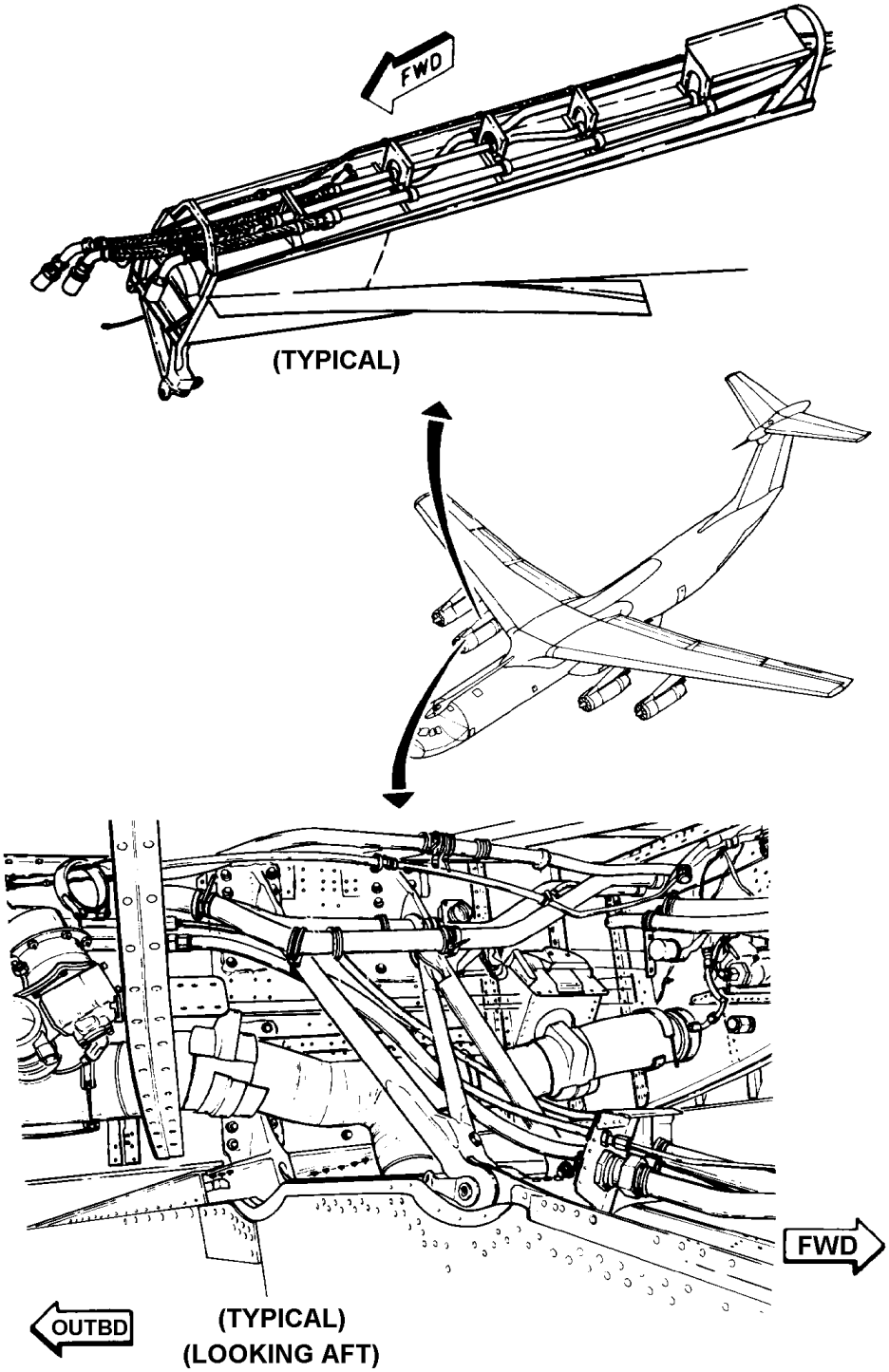

Engine Pylon

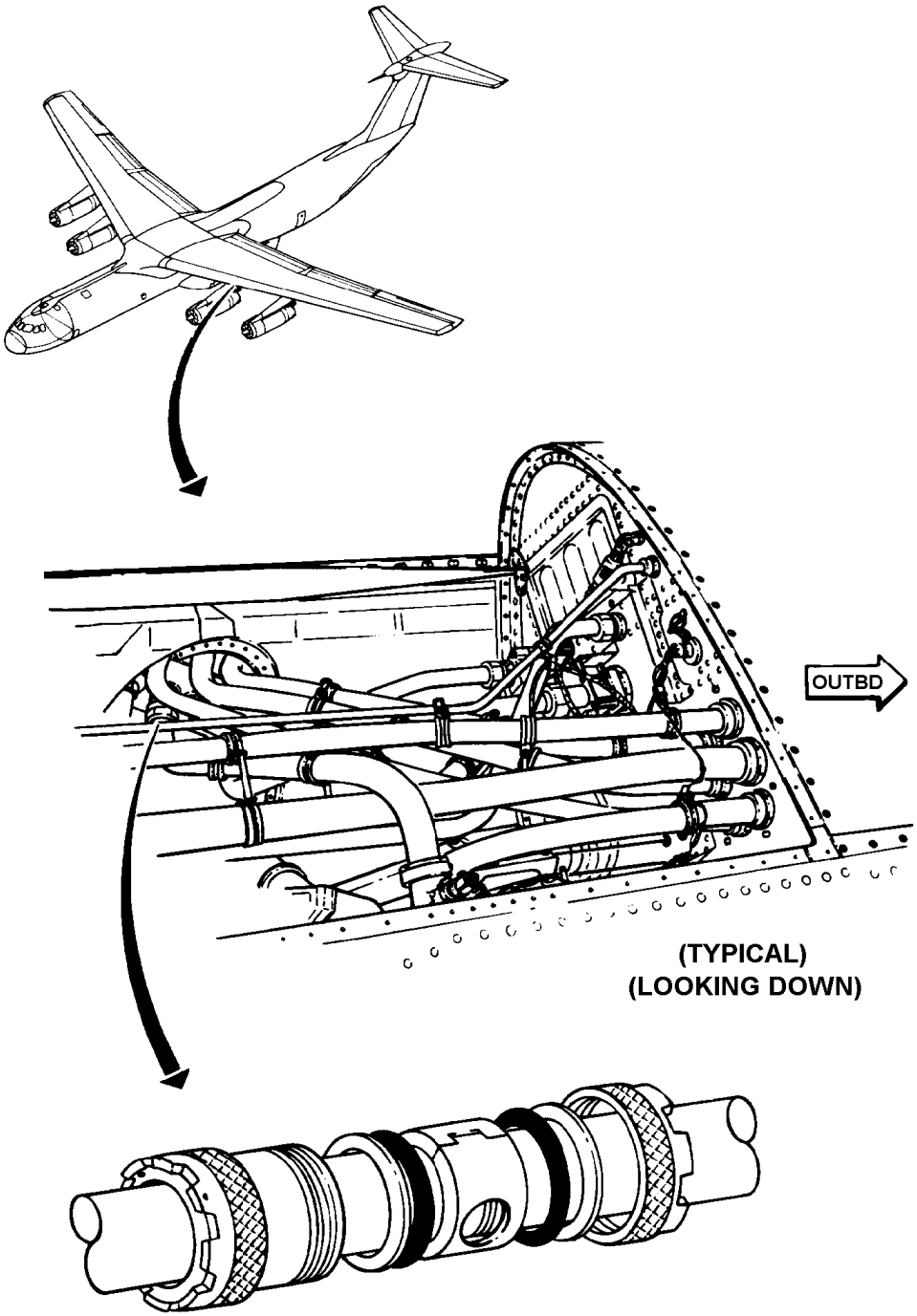

Engine Fuel Feed Line

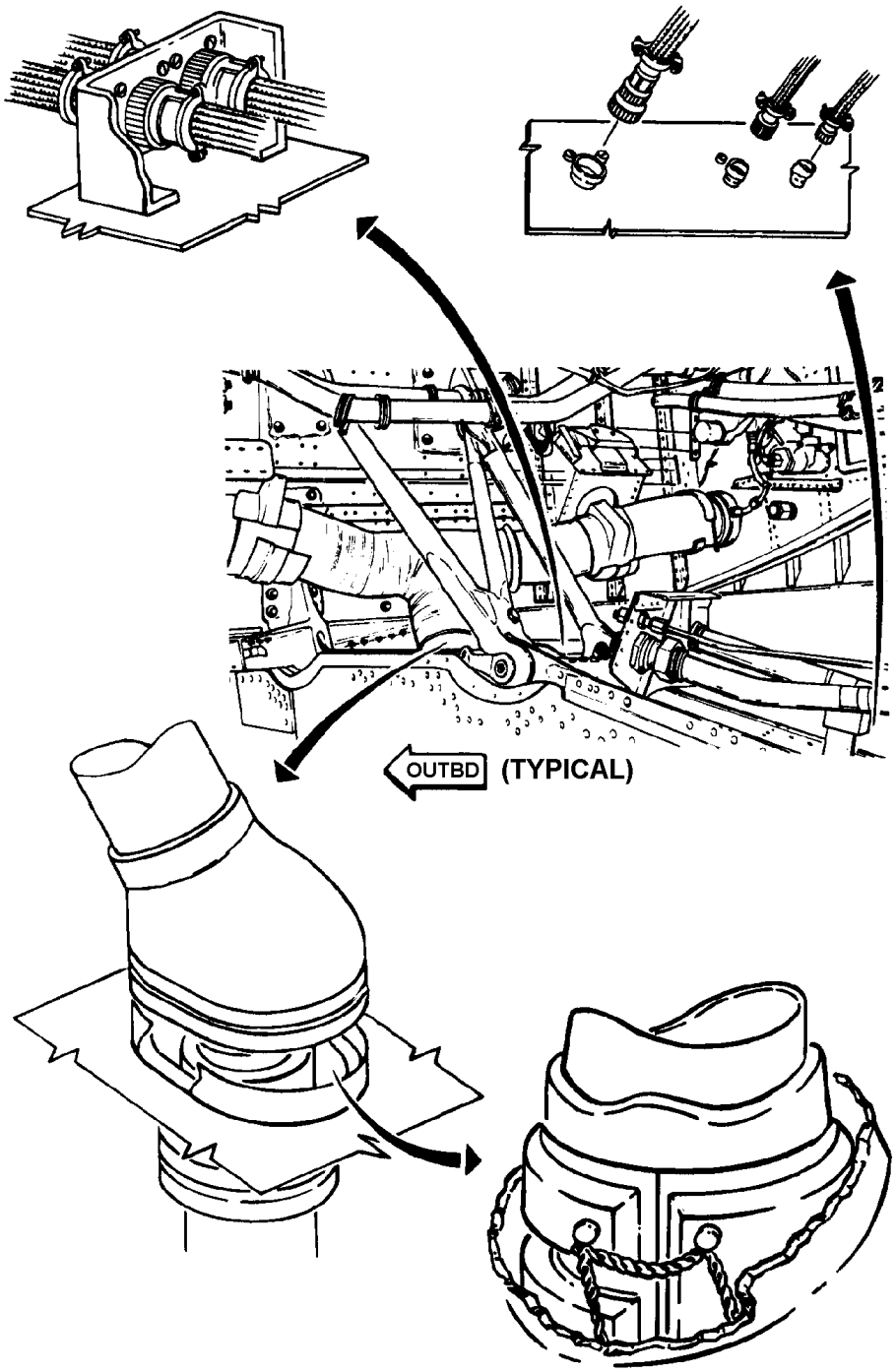

Engine Pylon Bleed Air Duct

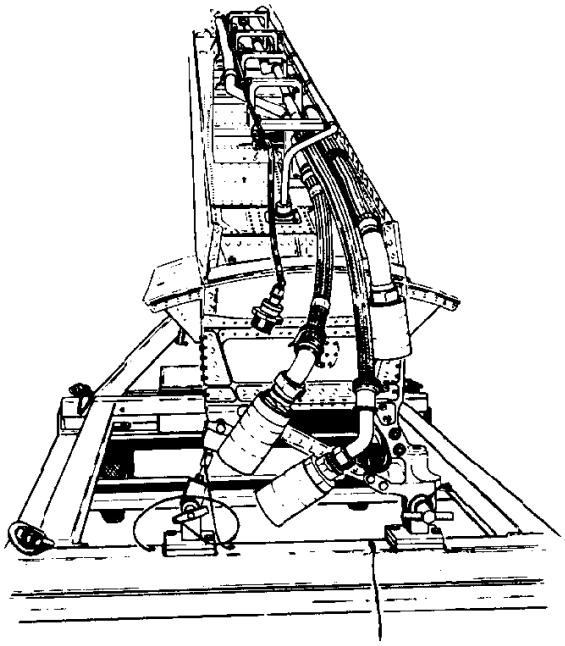

(TYPICAL)

(LOOKING AFT)

Engine Pylon

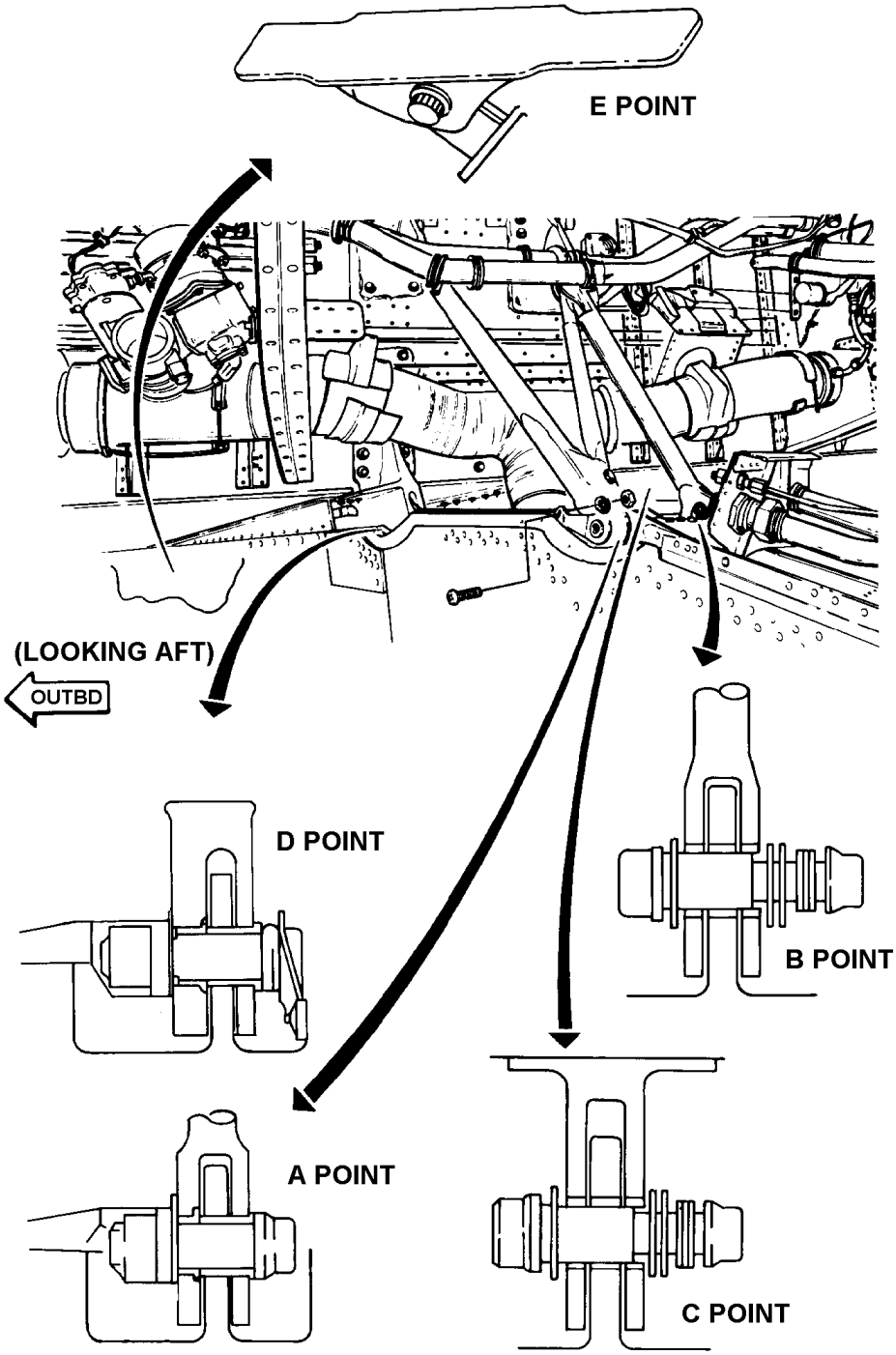

Engine Pylon Attach Points

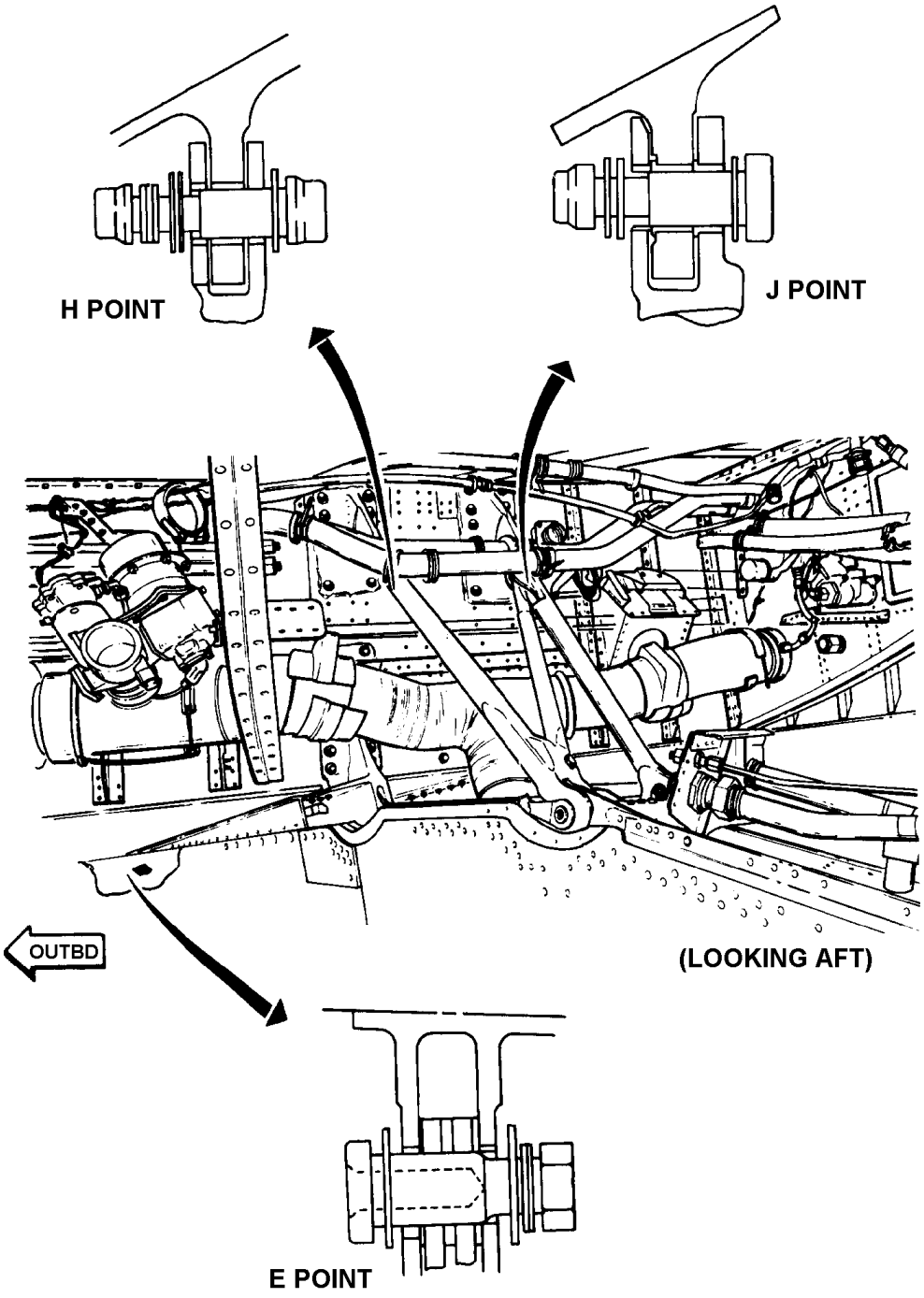

Engine Pylon Attach Points

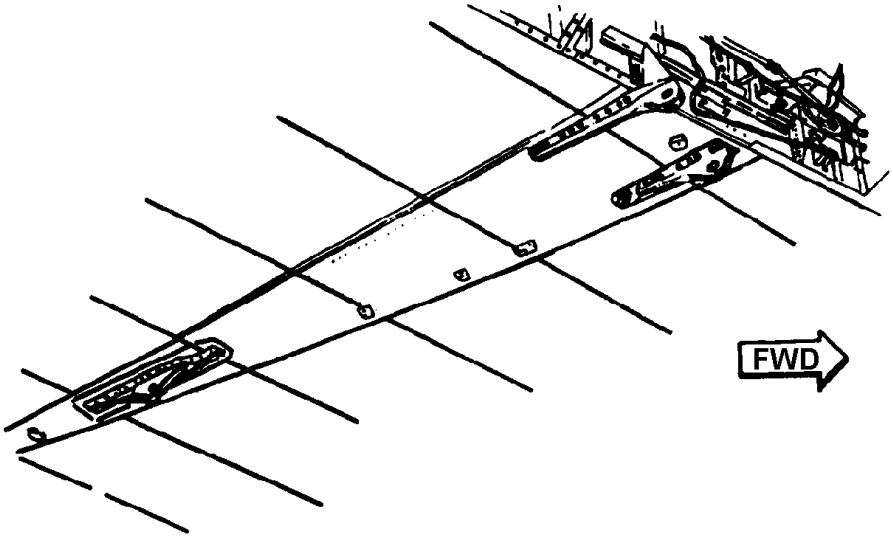

(LOOKING UP)

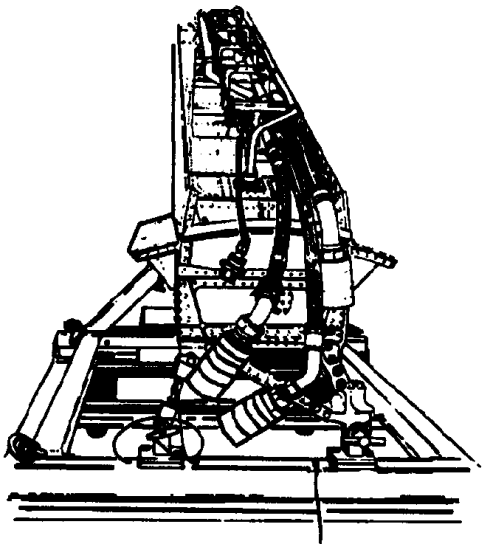

Engine Pylon Wing Attach Points

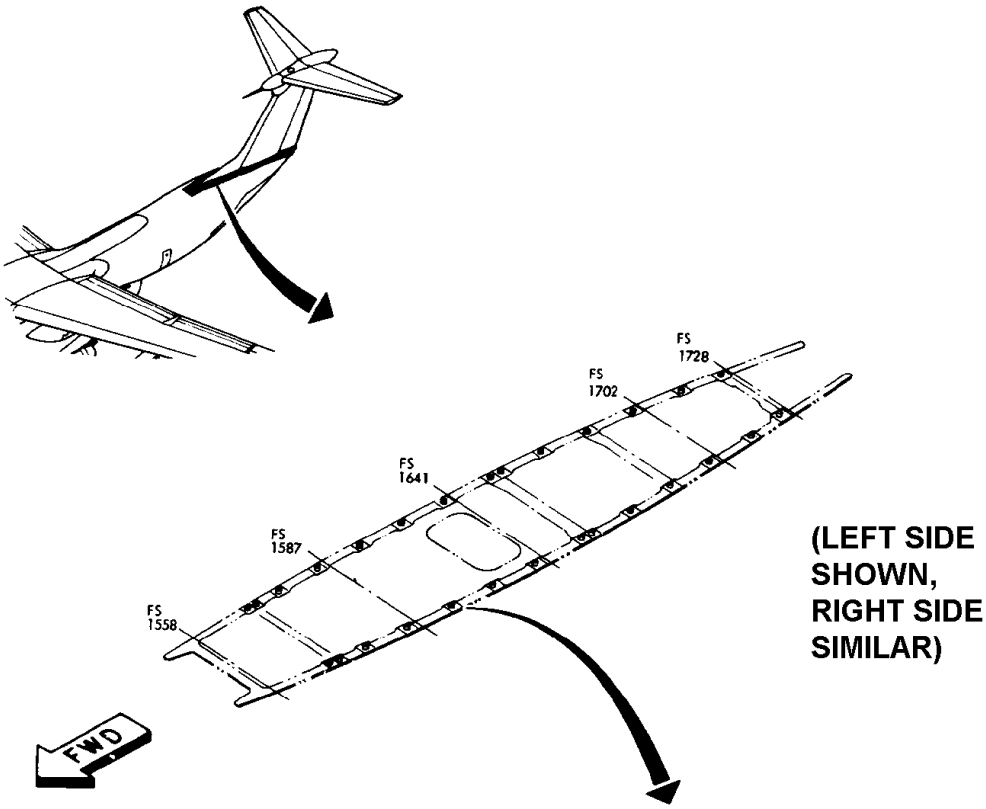

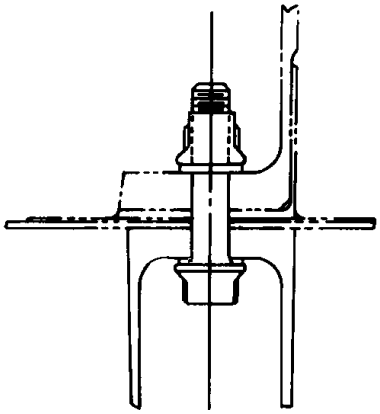

(TYPICAL)

Vertical Stabilizer Attachment Bolts

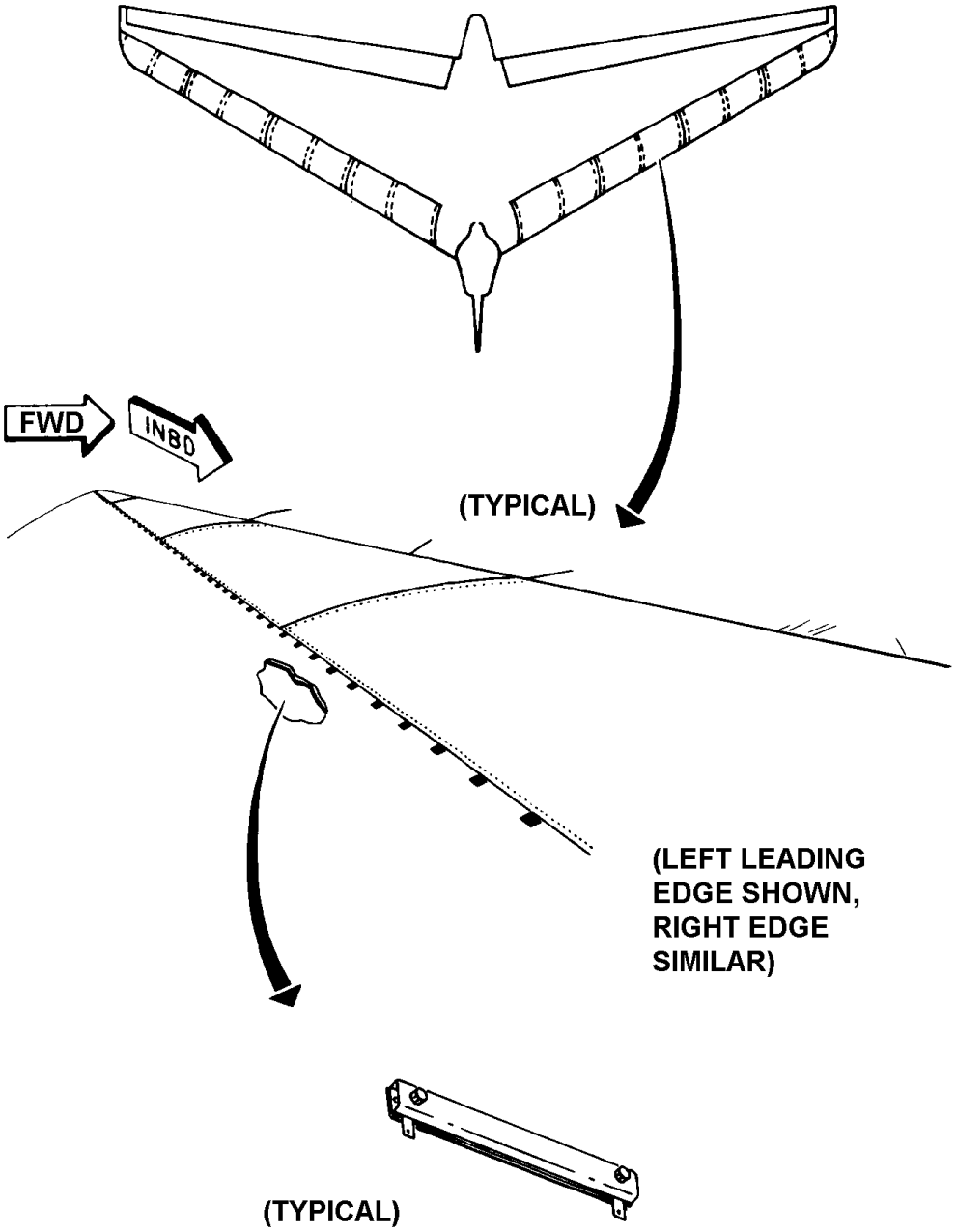

Horizontal Stabilizer Leading Edge

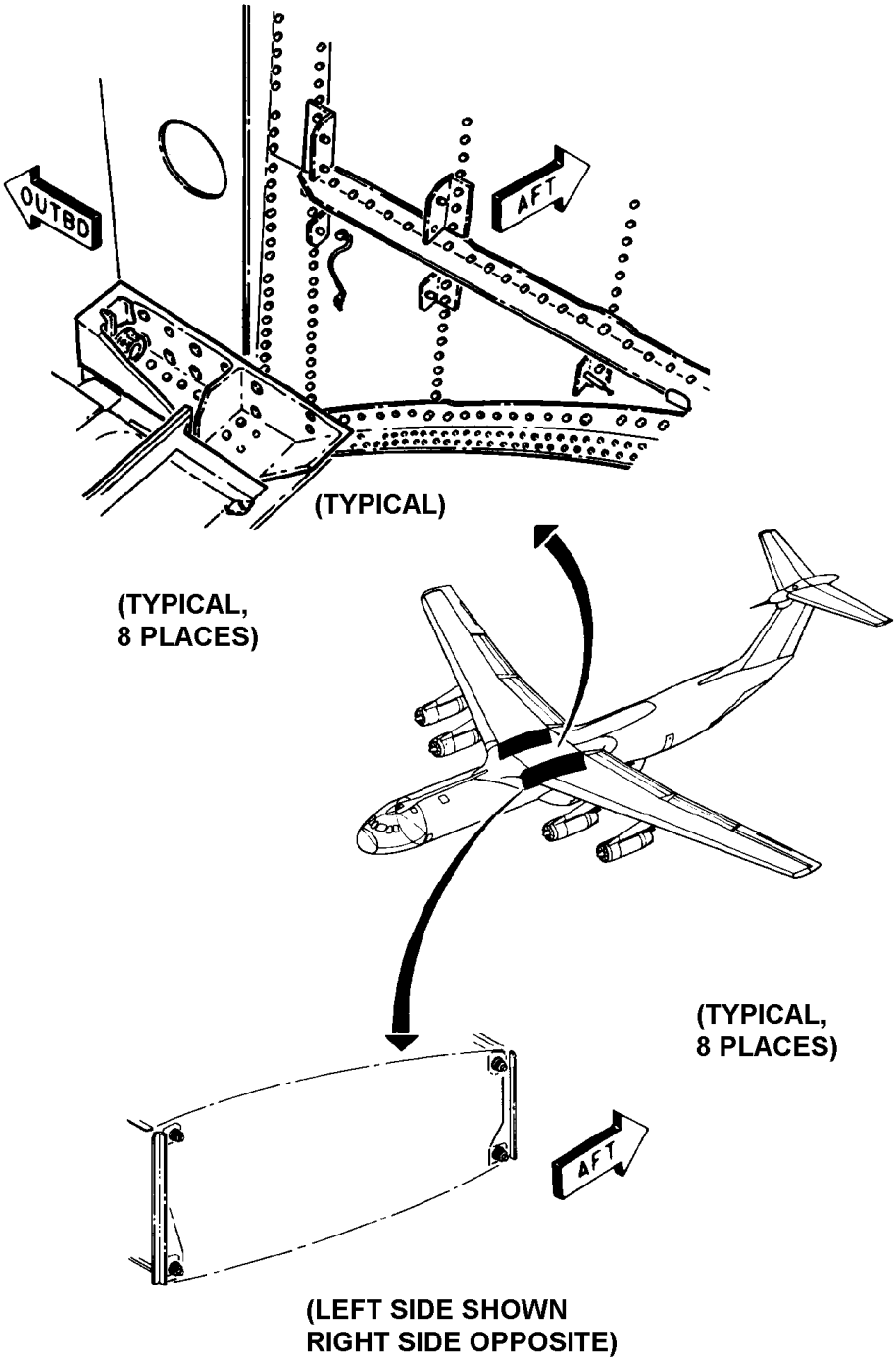

Wing Joint Tension Bolts

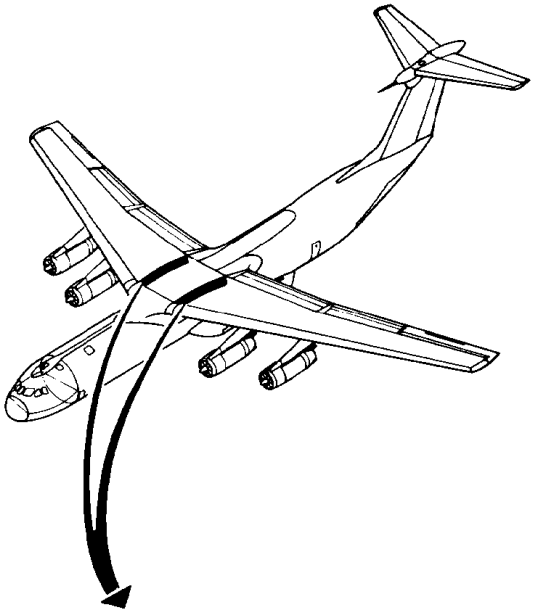

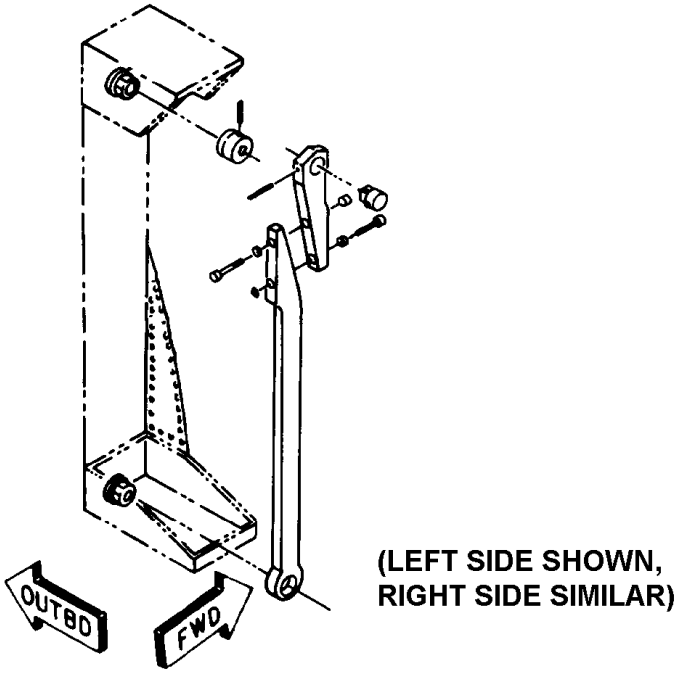

Wing Joint Tension Bolt Kit

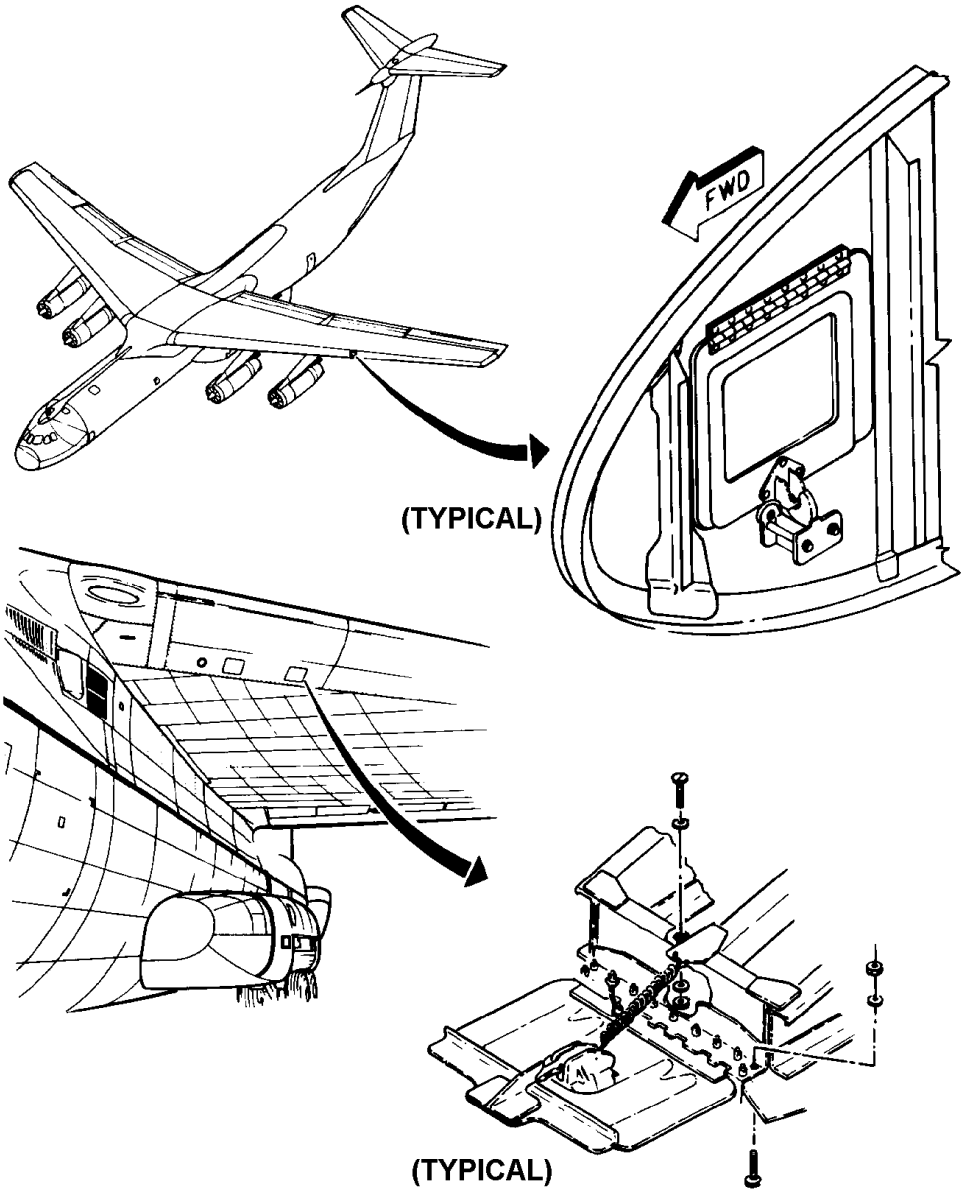

Wing Leading Edge Blowout and Vapor Barrier Doors

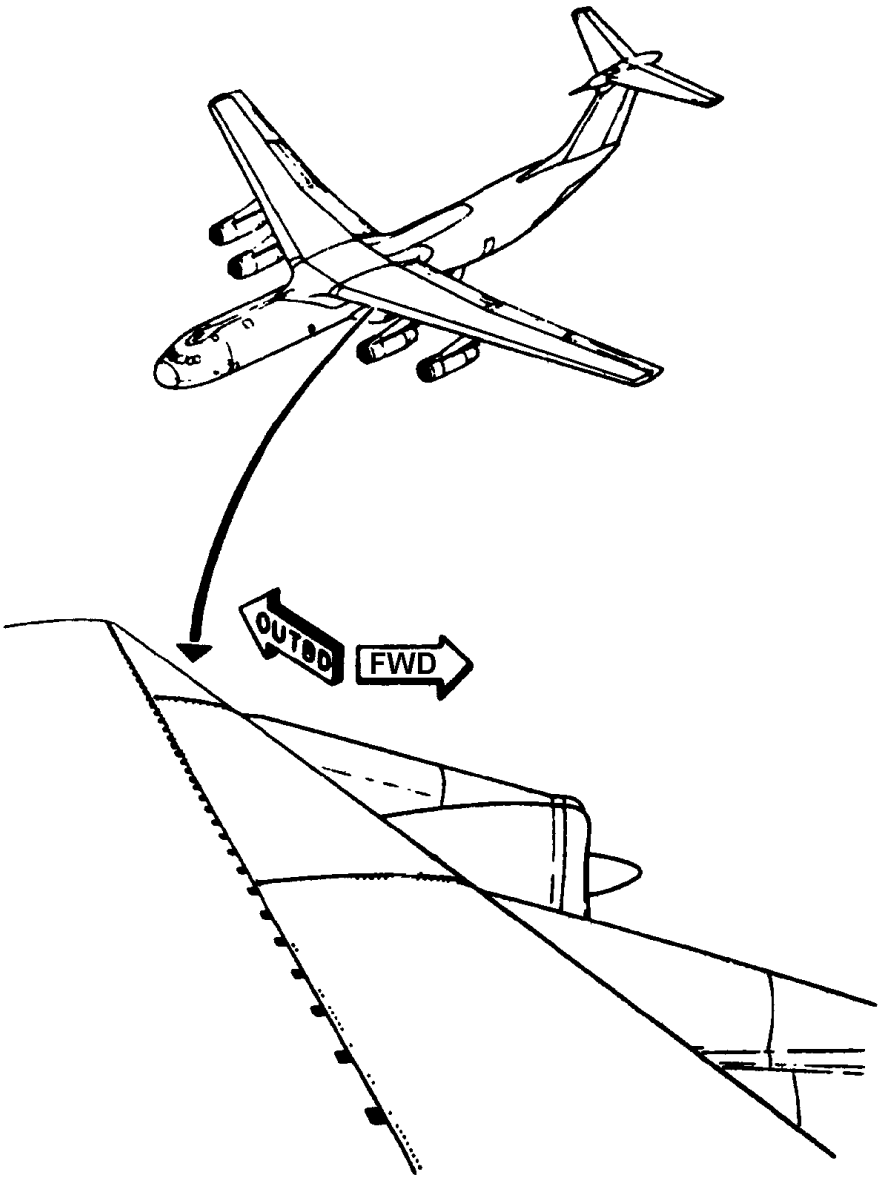

(LEFT WING SHOWN, RIGHT WING SIMILAR)

Wing Leading Edge

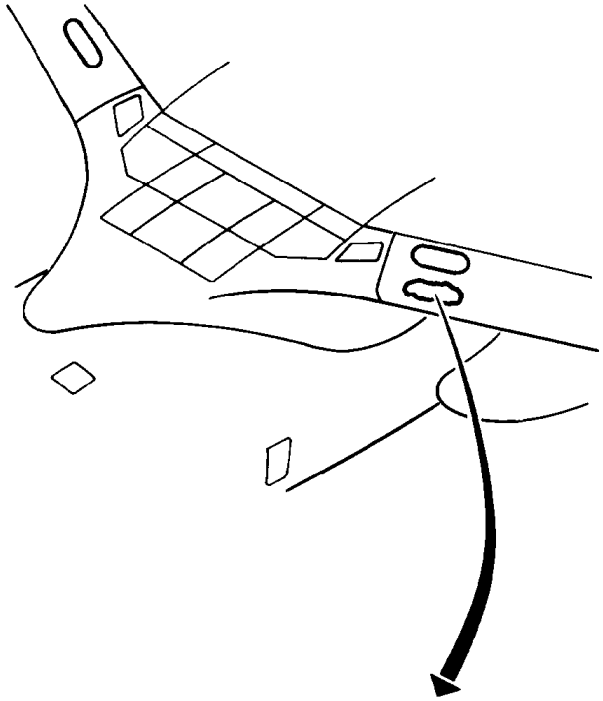

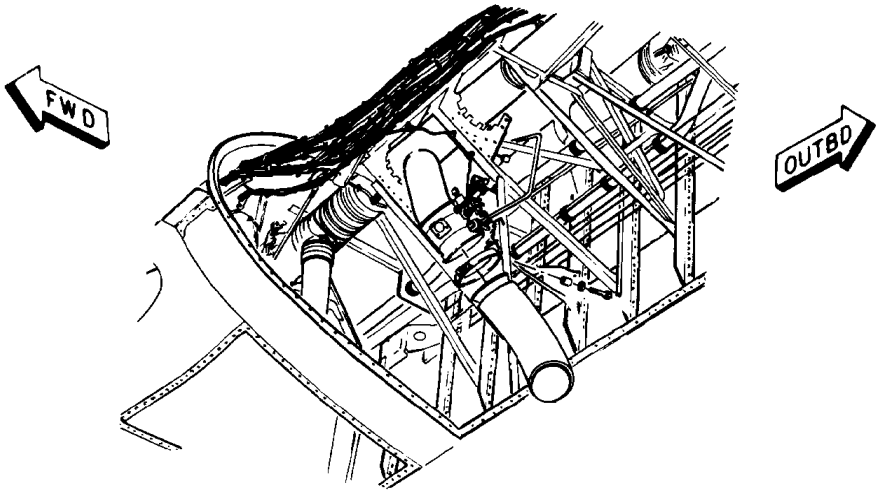

(LEADING EDGE SHOWN REMOVED FOR CLARITY)

(LOOKING UP)

Pressure Regulator Valve Exhaust Duct

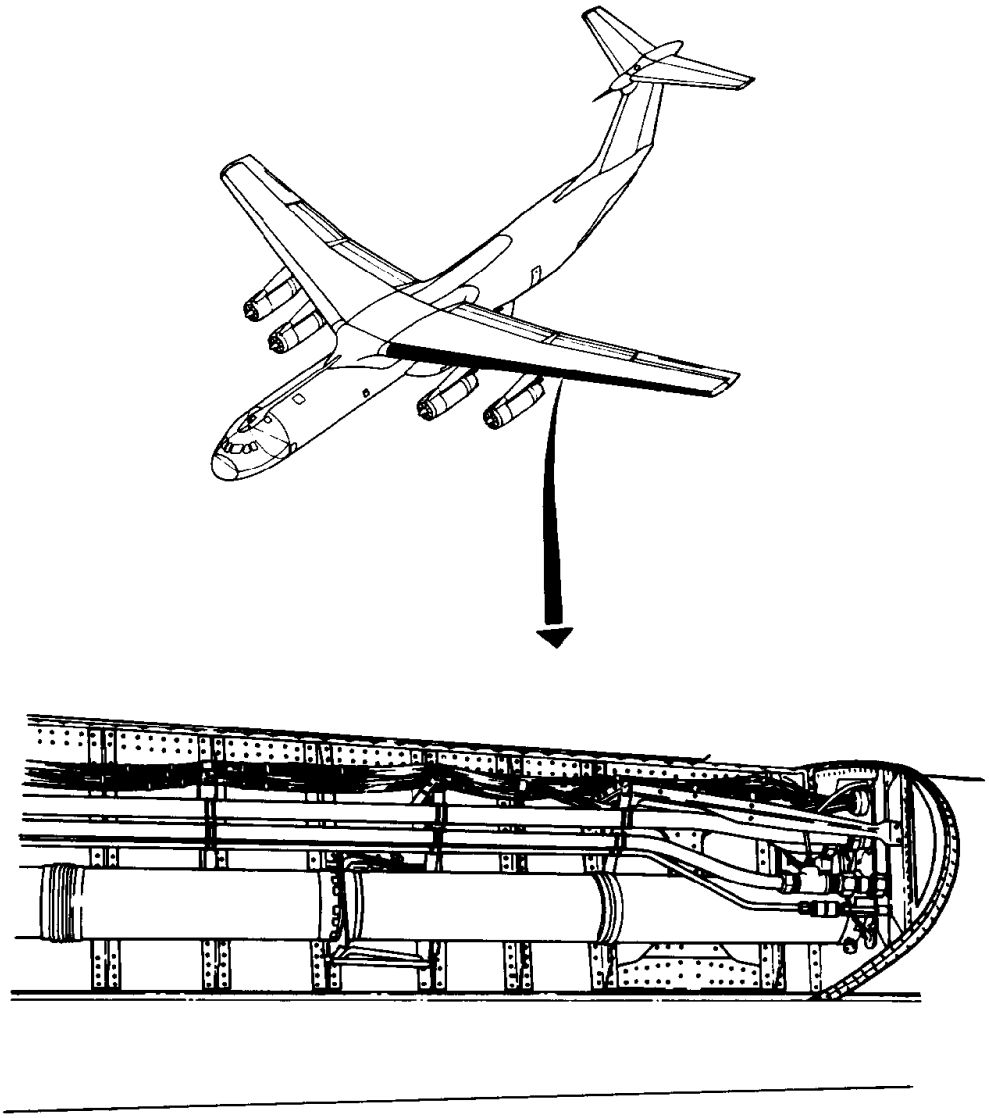

(LOOKING AFT)

Wing Leading Edge

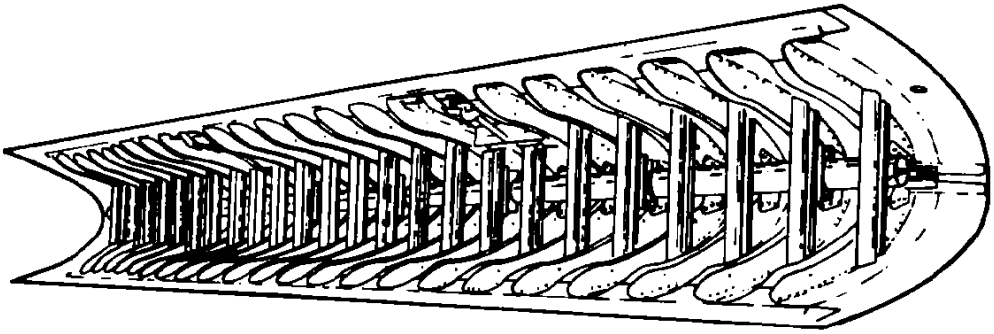

Typical Wing Leading Edge

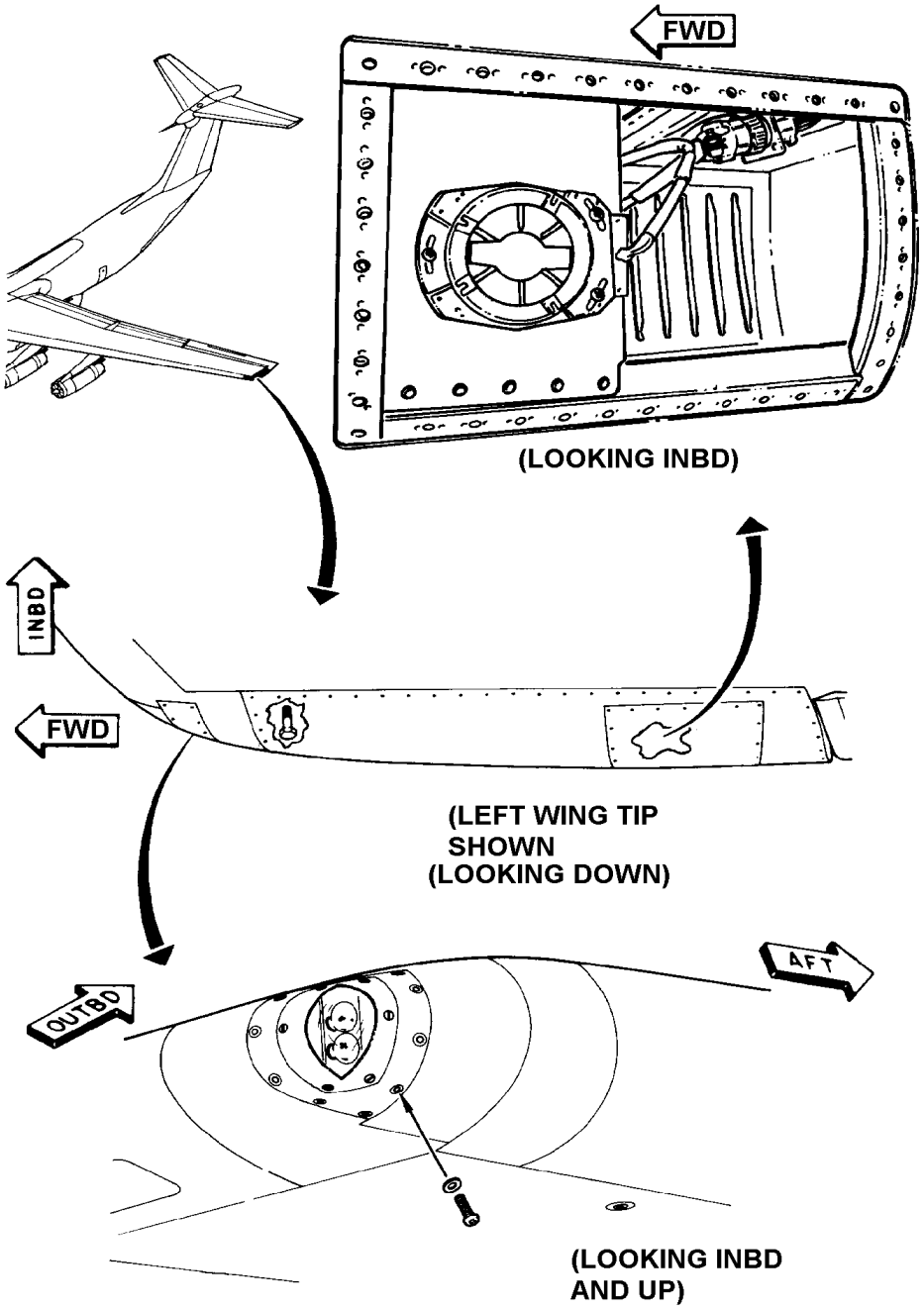
FWD
(LOOKING INBD)
INBD
FWD
(LEFT WING TIP
SHOWN
(LOOKING DOWN)
OUTBD
AFT
(LOOKING INBD
AND UP)

Wing Tip

STRUCTURAL DOORS SYSTEM

General Description

The structural doors system includes the crew and troop doors, emergency exits, cargo doors, interior doors, and door warning. The overall functions and operation of the structural doors system are described in this section.

Crew and Troop Doors Subsystem

The crew and troop doors provide entry to and exit from the airplane. The crew entrance door, which is located on the left side of the cargo compartment just aft of the forward bulkhead, is normally used for entrance and exit from the airplane. The troop doors, located on each side of the cargo compartment just forward of the ramp, are normally used for exit of paratroop personnel, although they may be used during maintenance. Each door has a combination of control rods and bellcranks used to position latches. These latches extend from the doors to lock and retract into the door to unlock. A combined interior handle and exterior handle on each door is used to control the position of the latches. The crew door uses one counterbalance assembly while each troop door uses two counterbalance assemblies. These counterbalances are used to carry the weight of the door to aid personnel when opening or closing the door. A cable attached between the counterbalance and the door provides the connection between these two components. Limit switches mounted near each door send a signal to the door warning system when a door is unlocked.

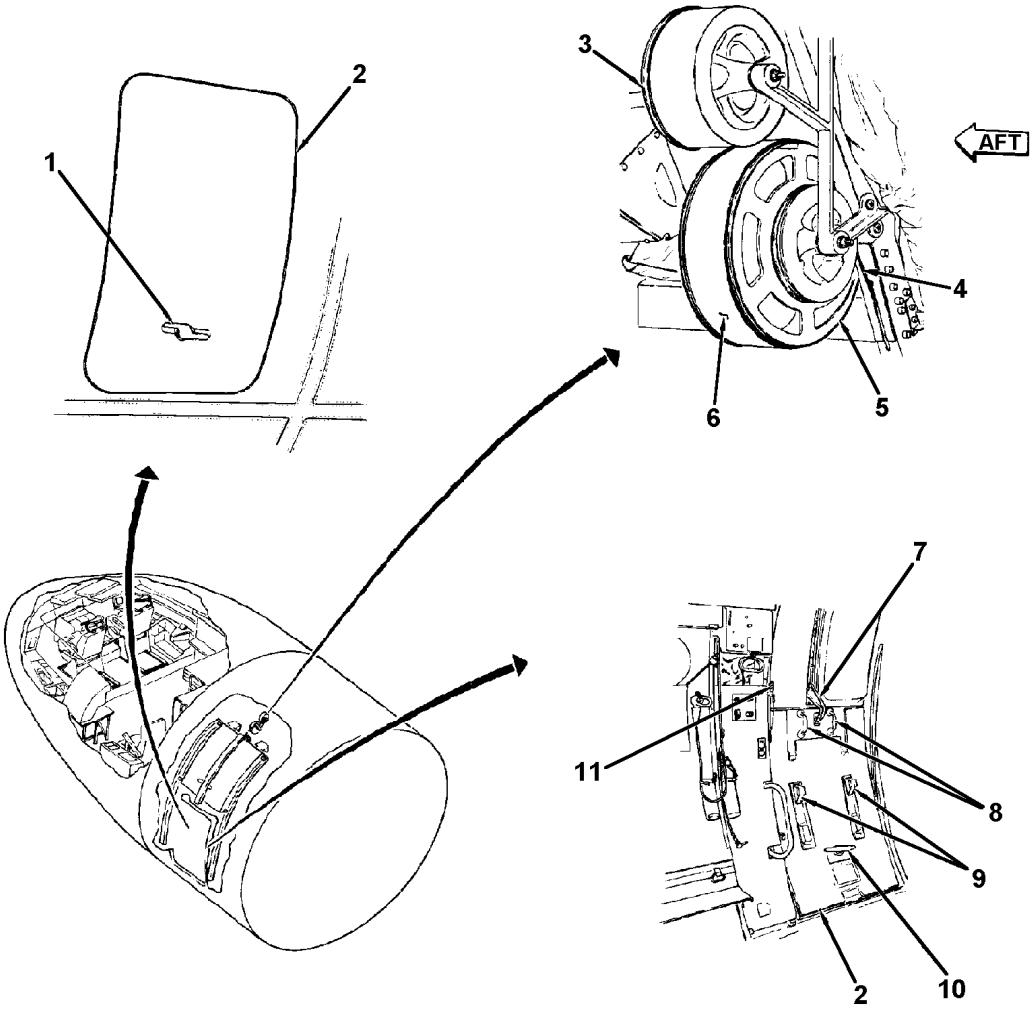

1. OUTER DOOR HANDLE
2. CREW ENTRANCE DOOR
3. TAKEUP DRUM
4. DOOR CABLE
5. COUNTERBALANCE DRUM
6. COUNTERBALANCE SPRING
7. ARM ASSEMBLY
8. DOOR HANDLES
9. LADDER BRACKETS
10. INNER DOOR HANDLE
11. UPLOCK

Crew Entrance Door System Components

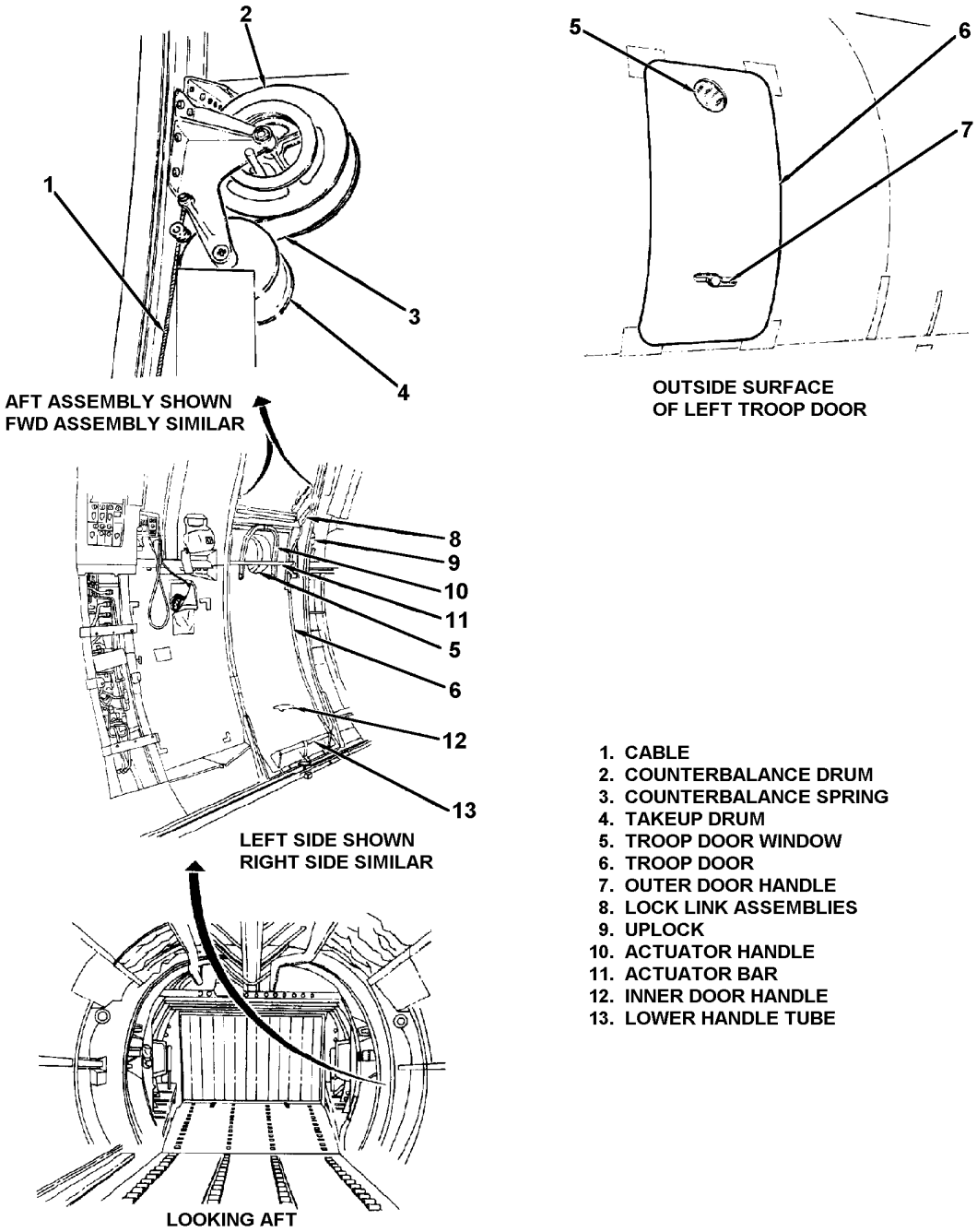

1. CABLE
2. COUNTERBALANCE DRUM
3. COUNTERBALANCE SPRING
4. TAKEUP DRUM
5. TROOP DOOR WINDOW
6. TROOP DOOR
7. OUTER DOOR HANDLE
8. LOCK LINK ASSEMBLIES
9. UPLOCK
10. ACTUATOR HANDLE
11. ACTUATOR BAR
12. INNER DOOR HANDLE
13. LOWER HANDLE TUBE

Troop Door System Components

Emergency Exits Subsystem

The emergency escape system provides escape from or entry into the airplane during emergencies. There are two types of emergency exits: emergency escape doors and emergency escape hatches. Four emergency escape doors are installed in the fuselage walls: two in the forward cargo compartment and two in the aft cargo compartment. The doors can be completely removed from the fuselage when the latches are released. The latches are controlled by a combination handle, control rod, and torque tube.

There are four emergency escape hatches: the flight station (No. 1) emergency escape hatch, the forward cargo compartment (No. 2) emergency escape hatch, the aft cargo compartment (No. 3) emergency escape hatch, and the aft cargo compartment (No. 4) emergency escape hatch. The No. 1 hatch is located overhead in the flight station and can be released from the inside or outside. The hatch, when released, opens down and into the flight station. The hatch has quick-release hinges so it can be removed and set out of the way. The No. 2 hatch is located overhead just aft of the crew door and can be released from the inside or outside. This hatch can also be released by the emergency depressurization system. The hatch, when released, opens up and forward to the outside of the airplane. The No. 3 hatch is located overhead just aft of the aft beam of the center wing. This hatch can be released from the inside or outside. The hatch must be supported when the latch is released since it is not connected or hinged to the airplane structure. The No. 4 hatch is located above the left troop door and can be opened from the inside or outside. If opened from the inside, the hatch opens downward and into the cargo compartment. If opened from the outside, the hatch is totally released from the airplane and falls into the cargo compartment. The three cargo compartment emergency escape hatches have ladders mounted nearby so personnel can reach the hatches.

The three cargo compartment hatches and the four escape doors have ropes mounted nearby to provide a means of getting off the airplane after exiting the hatch or door. Although not part of the emergency escape system, a stabilizer access door is installed at the top of the T-tail. This access door can be reached from the top of the forward ladder and is used to gain access to the top of the horizontal stabilizer.

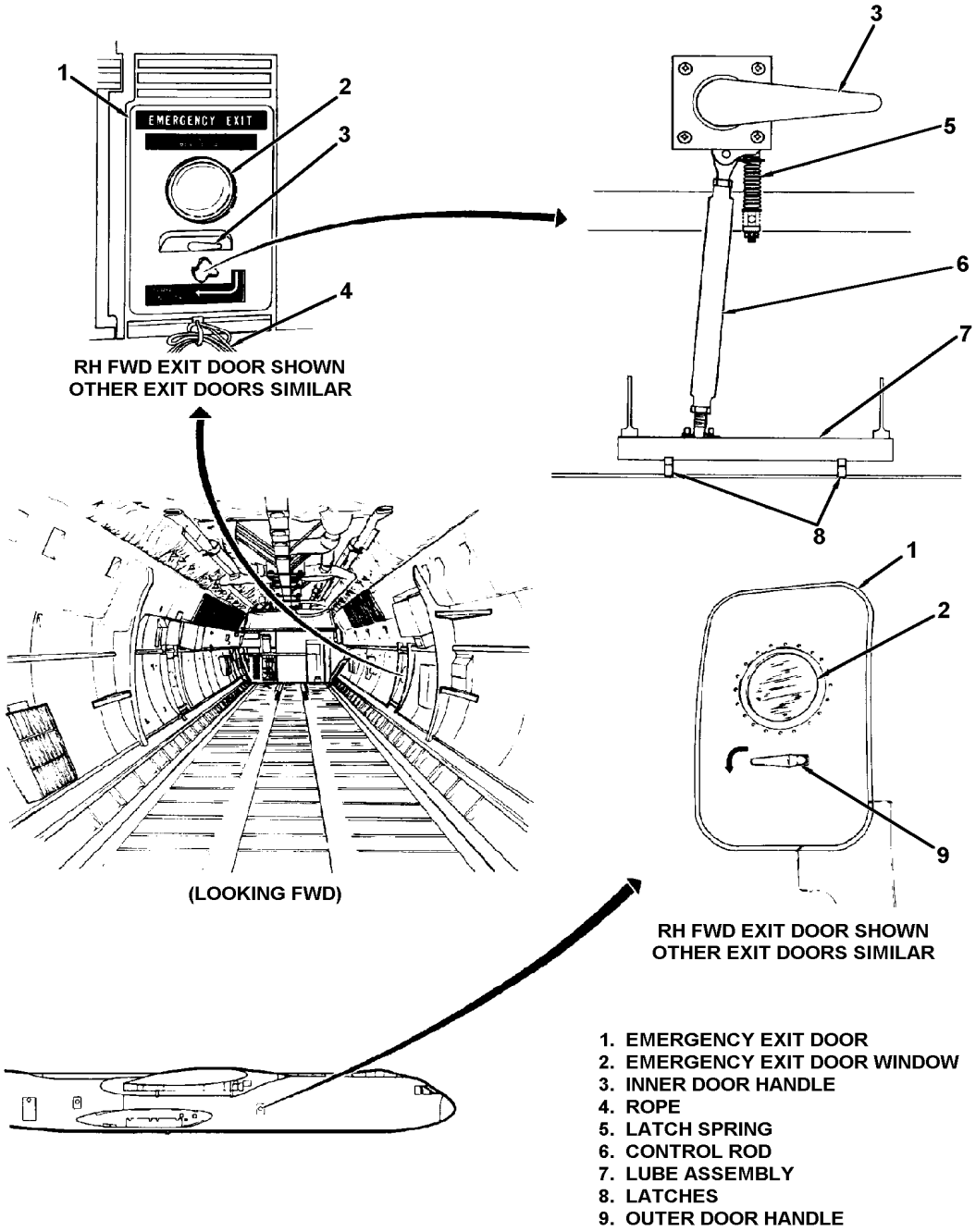

Emergency Exit System Components

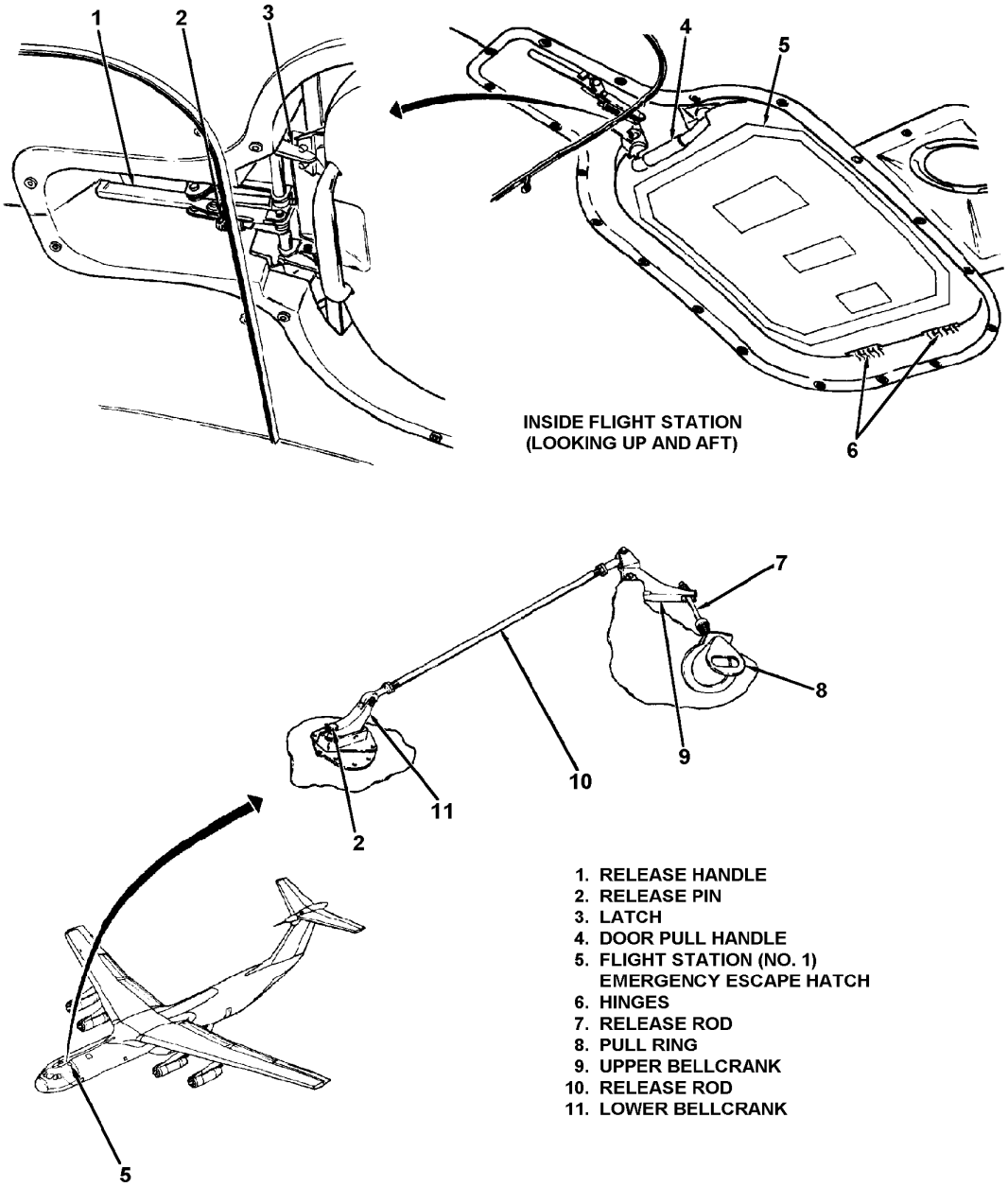

Flight Station (No. 1) Emergency Escape Hatch Components

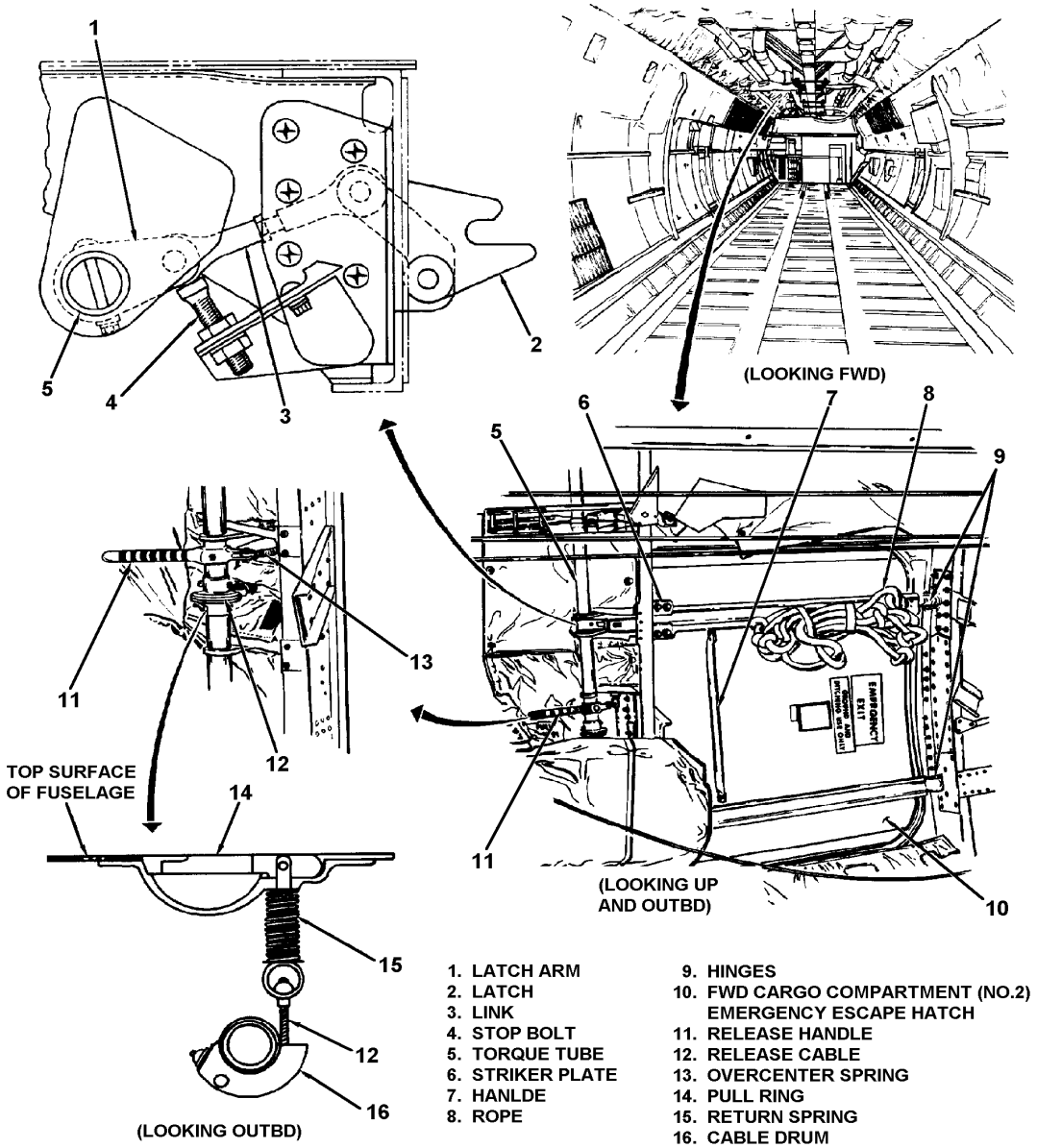

Forward Cargo Compartment (No. 2) Emergency Escape Hatch Components

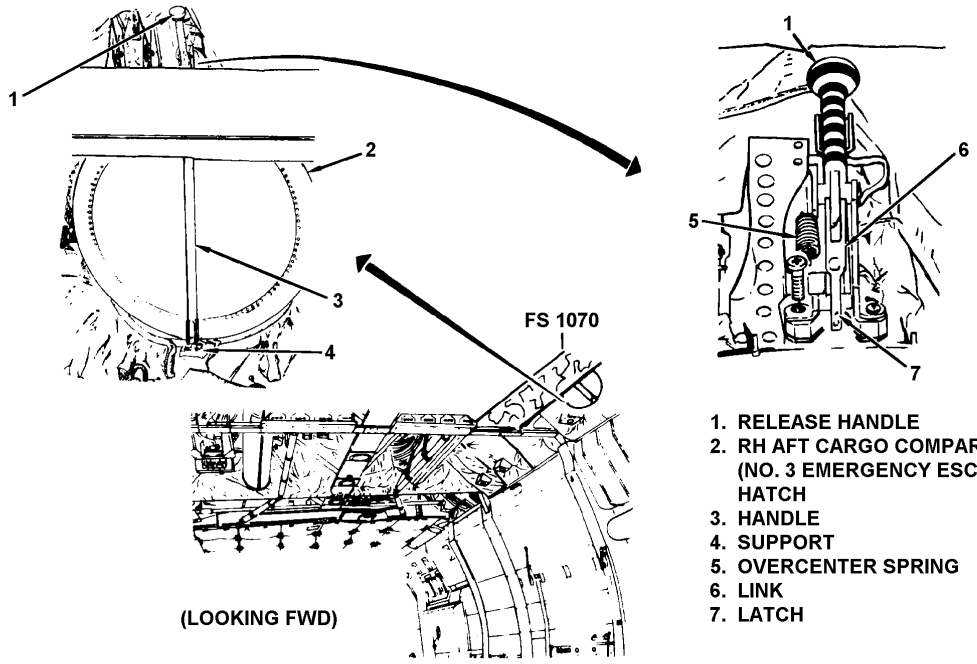

1. RELEASE HANDLE
2. RH AFT CARGO COMPARTMENT (NO. 3 EMERGENCY ESCAPE HATCH
3. HANDLE
4. SUPPORT
5. OVERCENTER SPRING
6. LINK
7. LATCH

Aft Cargo Compartment (No. 3) Emergency Escape Hatch Components

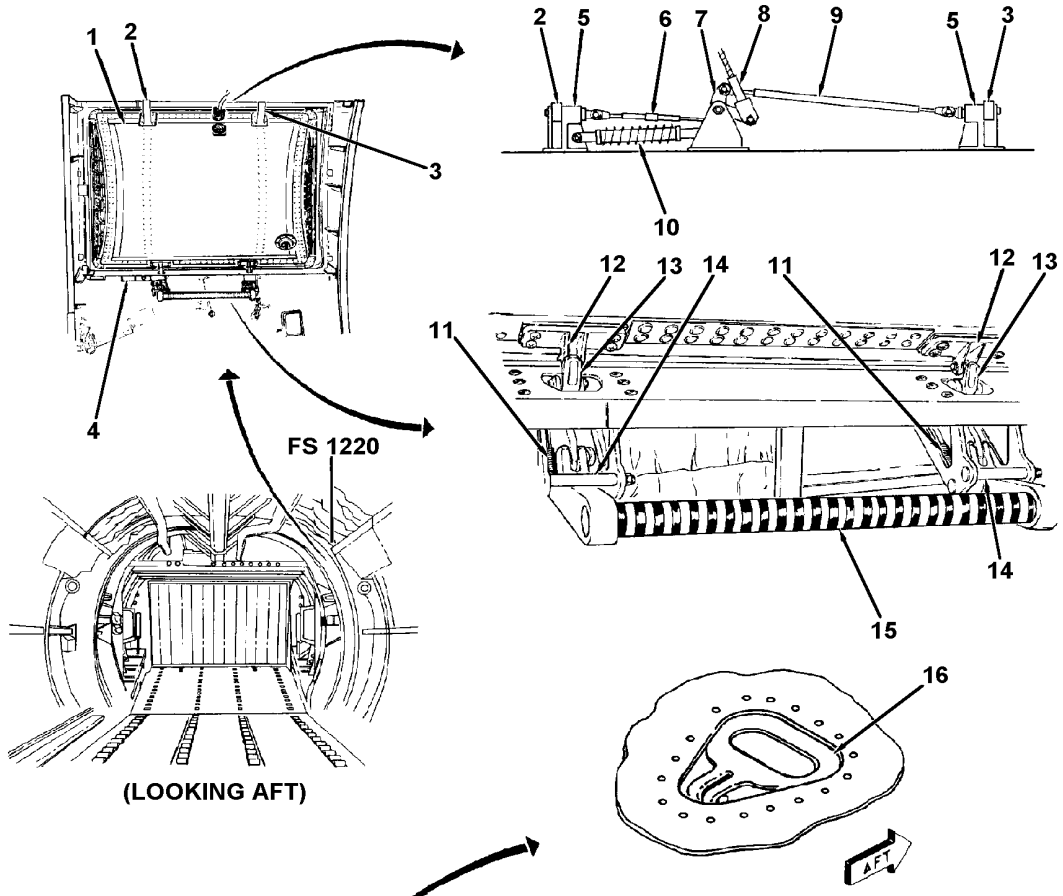

1. LH AFT CARGO COMPARTMENT (NO. 4) EMERGENCY ESCAPE HATCH
2. AFT UPPER HINGE
3. FWD UPPER HINGE
4. DITCHING HANDLE
5. HINGE FITTINGS
6. TURNBUCKLE
7. BELLCRANK
8. RELEASE CABLE
9. RELEASE TUBE
10. SPRING
11. SPRING
12. LATCH FITTING
13. LATCH
14. SPACER
15. RELEASE HANDLE
16. PULL RING

Aft Cargo Compartment (No. 4) Emergency Escape Hatch Components

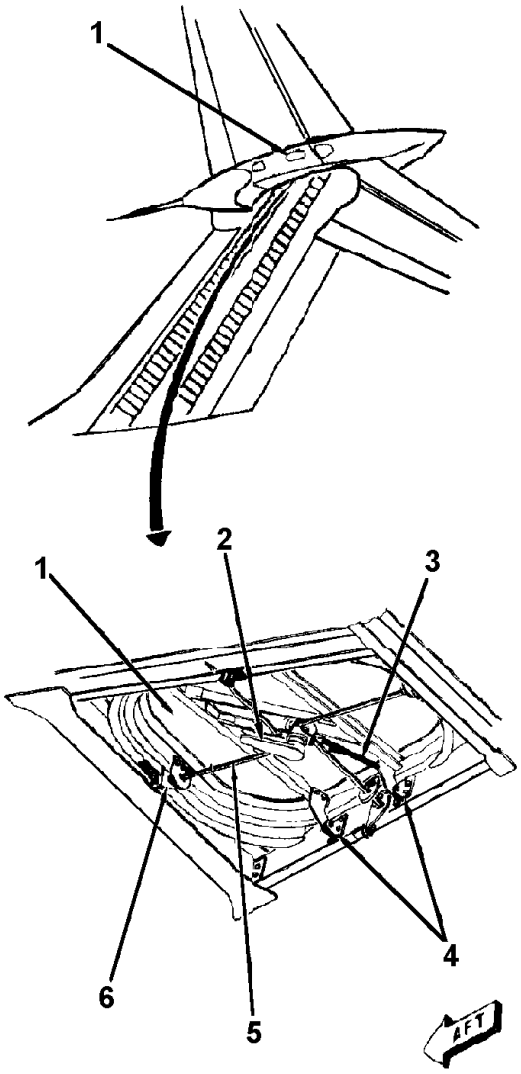

(LOOKING UP FROM
FWD LADDER)

1. STABILIZER ACCESS DOOR
2. RELEASE HANDLE
3. SPRING
4. HINGES
5. STRIKE PIN (FOUR PLACES)
6. STRIKE CATCH (FOUR PLACES)

Stabilizer Access Door Components

Cargo Doors Subsystem

The clamshell-type petal doors, pressure door, and ramp are referred to as the cargo doors. Hydraulic pressure for operation of the doors is provided by hydraulic system No. 3. Four separate control panels may be used to operate the cargo doors. Pilot's and copilot's aerial delivery system (ADS) control panels permit operation of the cargo doors in flight. These panels also contain indicator lights which visually display the position of the doors. The ramp control panel, located near the ramp, is used to control the cargo doors on the ground. A switch on the crew door interphone and public address (PA) control panel is normally used to open or close the pressure door only in flight. When static line A-frame actuators are installed, only the PRESSURE DOOR switch on the ramp control panel will close the pressure door. If the static line A-frame actuators are not installed, dummy plugs (using jumpers in place of the actuator) are installed. When the dummy plugs are installed, operation of the pressure door is possible at any of the four panels. The electrically-controlled cargo doors must open in a set sequence to prevent damage. Basically, the proper opening sequence is the pressure door unlocks and opens, then the ramp unlocks and lowers to the ADS position, and finally the petal doors unlock and open to the selected position. The proper closing sequence is for the petal doors to close and lock, then the ramp to close and lock, and finally for the pressure door to close and lock.

Pressure Door

The pressure door seals off the cargo compartment from the unpressurized aft fuselage when closed. It locks to the ramp through a series of hooks, which rotate locked or unlocked by a pressure door lock actuator at each lower corner of the pressure door. A single push-pull type hydraulic actuator, mounted on the aft side of the pressure door, opens or closes the pressure door. The pressure door has a continuous piano-type hinge at the top and opens up and aft. An uplock in the aft upper deck mechanically locks the pressure door open and swings a mechanical indicator down for visual confirmation. This uplock is operated by a hydraulic pressure door uplock actuator. Two selector valves control the four hydraulic actuators, and are sequenced through limit switches. During a normal opening sequence, the pressure door moves forward and unlocks simultaneously. After the pressure door is against the ramp, it moves open into the uplock. During a normal close sequence, the pressure door moves up (open) to allow the uplock to release, then lowers until it contacts the ramp. At this point, the hooks rotate locked and the pressure door moves aft until the hooks engage the ramp latch fittings. The system will remain stationary with the pressure door lock and open circuits energized (called the holding circuit). This aids in the installation of cam jacks to mechanically duplicate the pressure door holding circuit. After the holding circuit is de-energized, seven auxiliary latch assemblies can be installed as a backup to the primary lock system.

Cargo Ramp

The ramp provides truck-bed or ground-level loading access to the cargo compartment. The ramp along with the pressure door provides the aft closure for the cargo compartment. The ramp is locked to the airplane structure by a dead-bolt type locking system. A series of connecting rods and locking pins secure fittings on the outer edge of the ramp to blocks on each side. A small hydraulic actuator on each side slides the locking mechanism forward and aft. Two single push-pull hydraulic actuators, mounted

on each side of the aft cargo compartment, lower and raise the ramp. The ramp is hinged at the forward end to the airplane structure. ADS links are installed at the aft corners of the ramp and can be quickly released for lowering the ramp to the ground. These links must be connected for the sequence to continue so the petal doors can open. Two selector valves control the four hydraulic actuators and are sequenced through limit switches. During a normal open sequence (pressure door open and locked), the ramp is energized closed so that the ramp locks can be unlocked. The ramp then lowers to the ADS position. The ramp may be lowered to the ground (after petal doors open) by disconnecting the ADS links and lowering the ramp using the RAMP switch. During a normal close sequence, the ramp raises and remains energized until the pressure door is closed and locked. With the ramp energized up, the locking pins slide through the ramp fittings and the blocks to lock the ramp. A ramp manual safety pin can be installed at each side to provide a positive locked indication.

Petal Doors

Two petal doors in the underside of the aft fuselage complete the cargo door system. When open, unobstructed access to the cargo compartment is provided. When closed, the petal doors and ramp provide a complete aerodynamic closure over the aft fuselage opening. The petal doors are locked together by two lock assemblies mounted on the left petal door. When closed, the lock hooks engage fittings on the right petal door to lock them together. The lock assemblies are actuated by hydraulic actuators. A gearbox assembly, torque tubes, and jackscrew-type actuators drive the petal doors opened or closed. Two selector valves control the two lock actuators and hydraulic motor on the gearbox. During a normal open sequence (pressure door and ramp open), the petal doors unlock, then drive to the ADS or ground loading position, depending on the mode selected. During a normal close sequence, the petal doors drive closed, then lock.

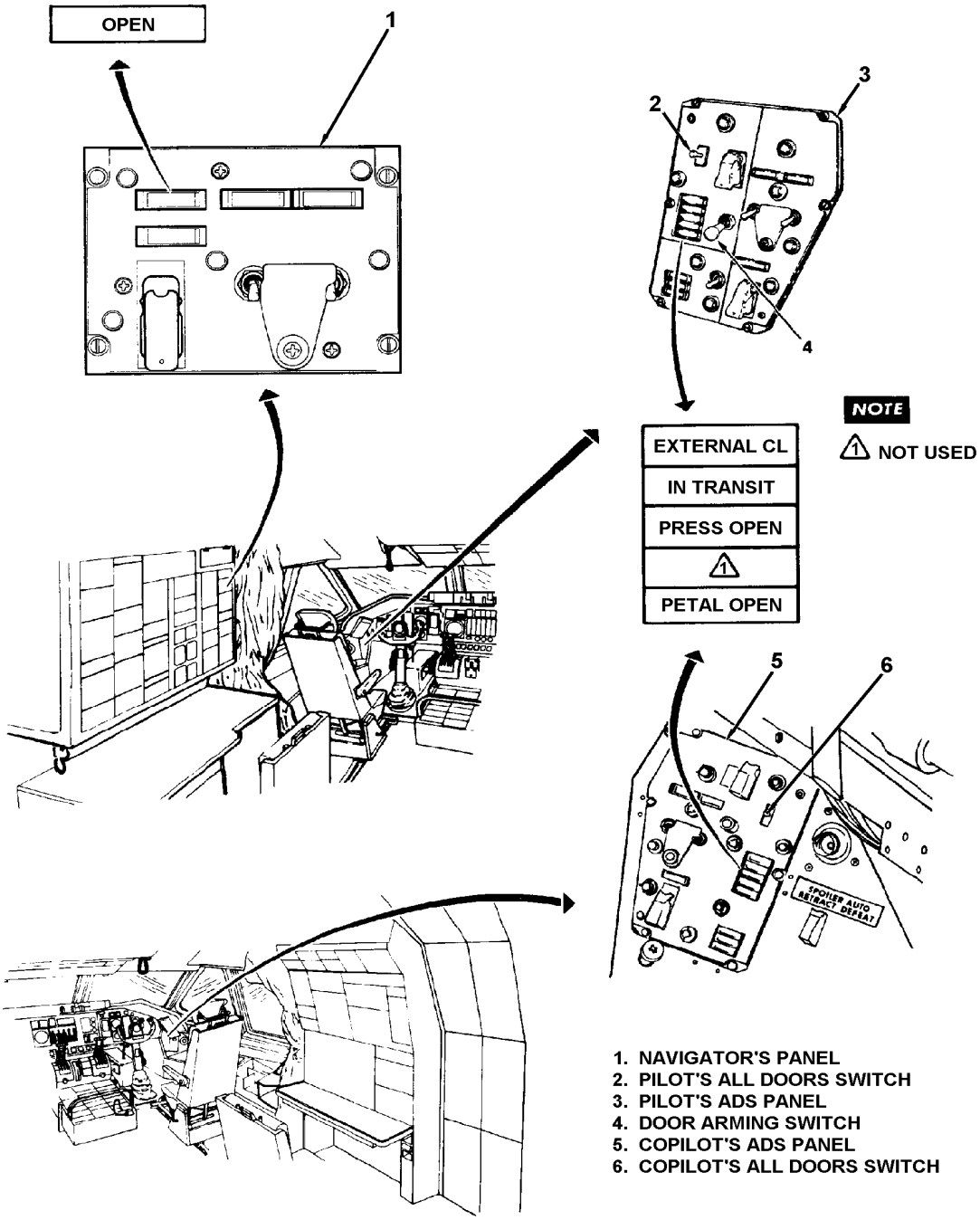

Cargo Doors Subsystem Controls and Indicators (Sheet 1 of 2)

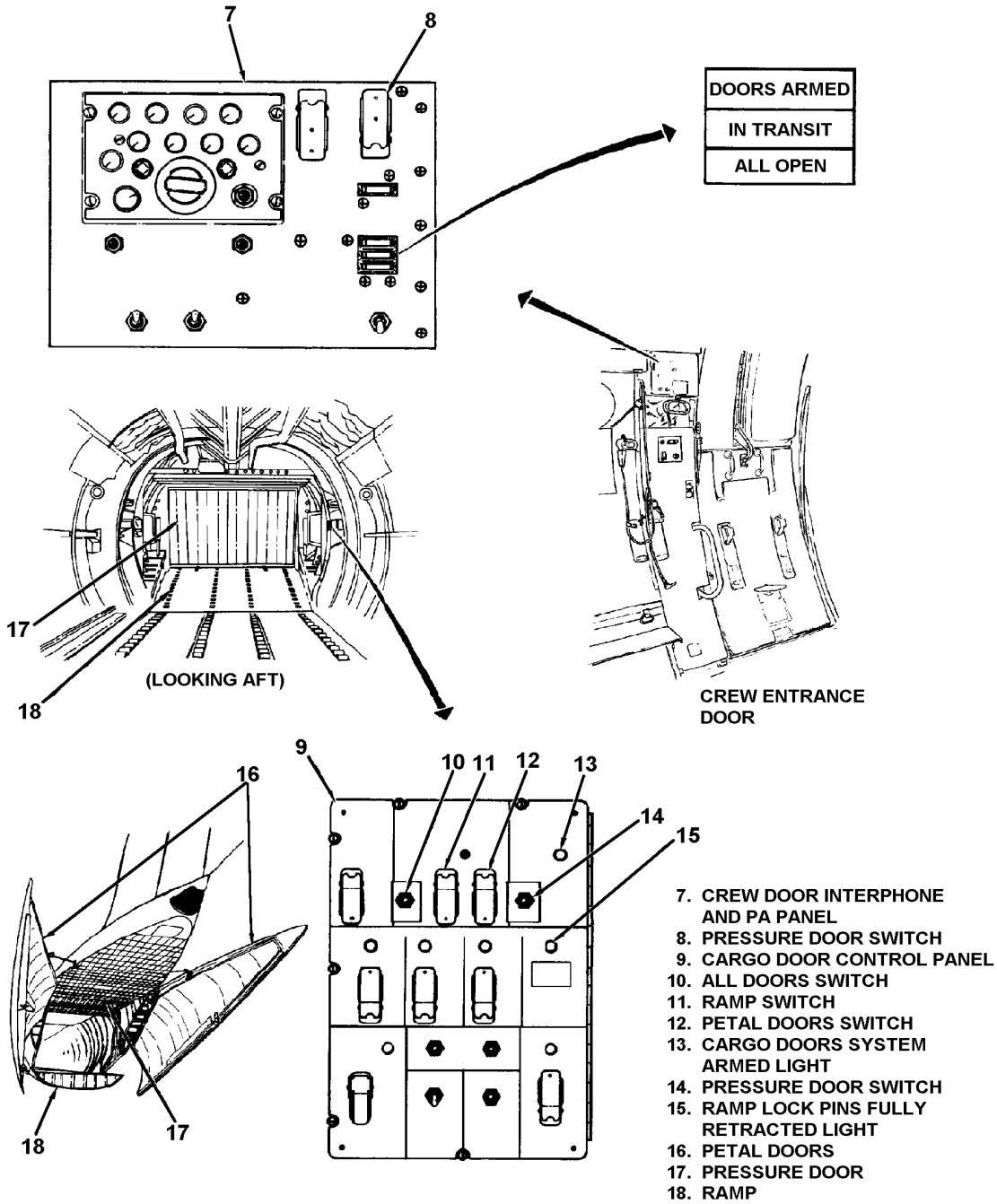

Cargo Doors Subsystem Controls and Indicators (Sheet 2 of 2)

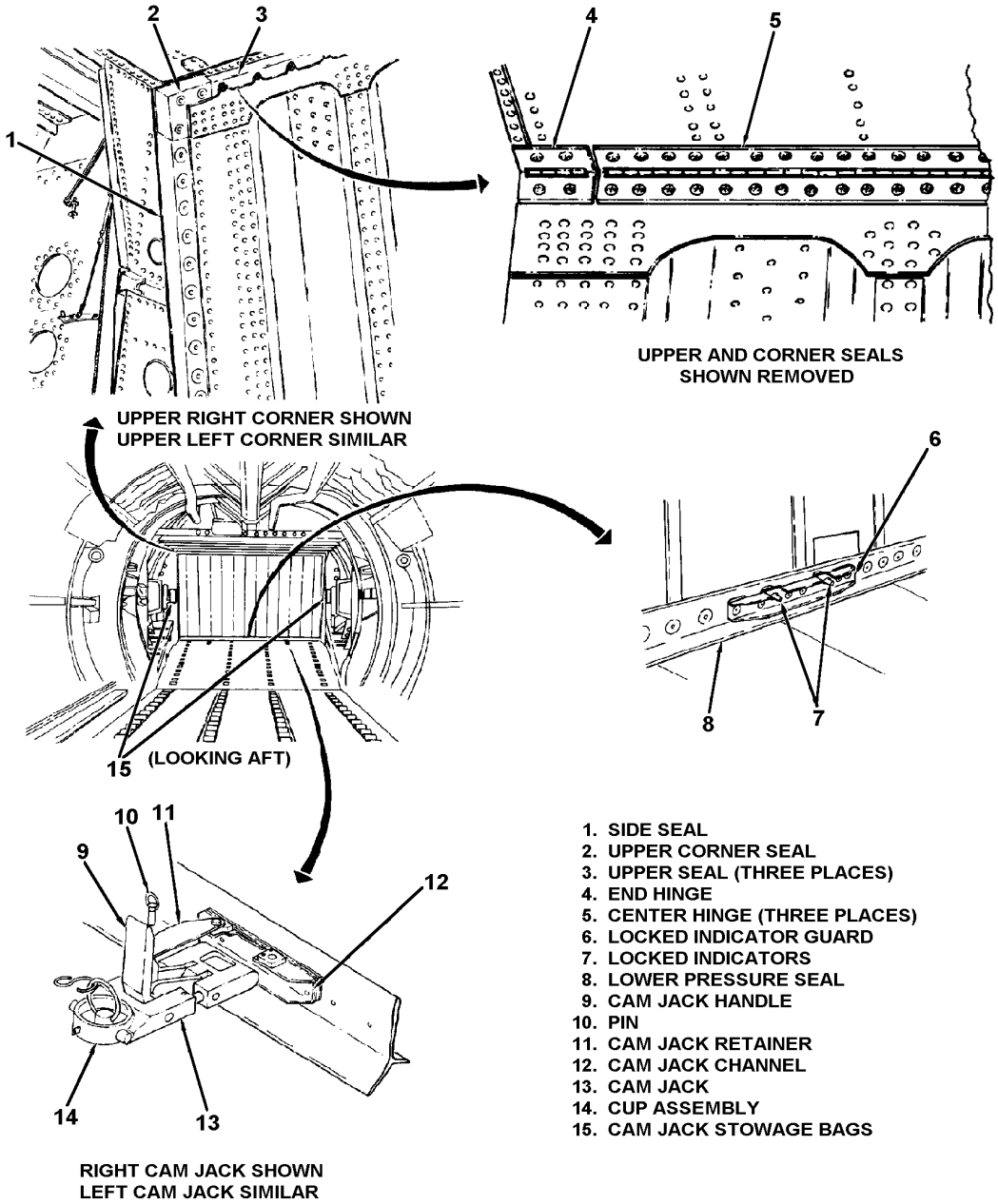

Pressure Door System Components (Sheet 1 of 3)

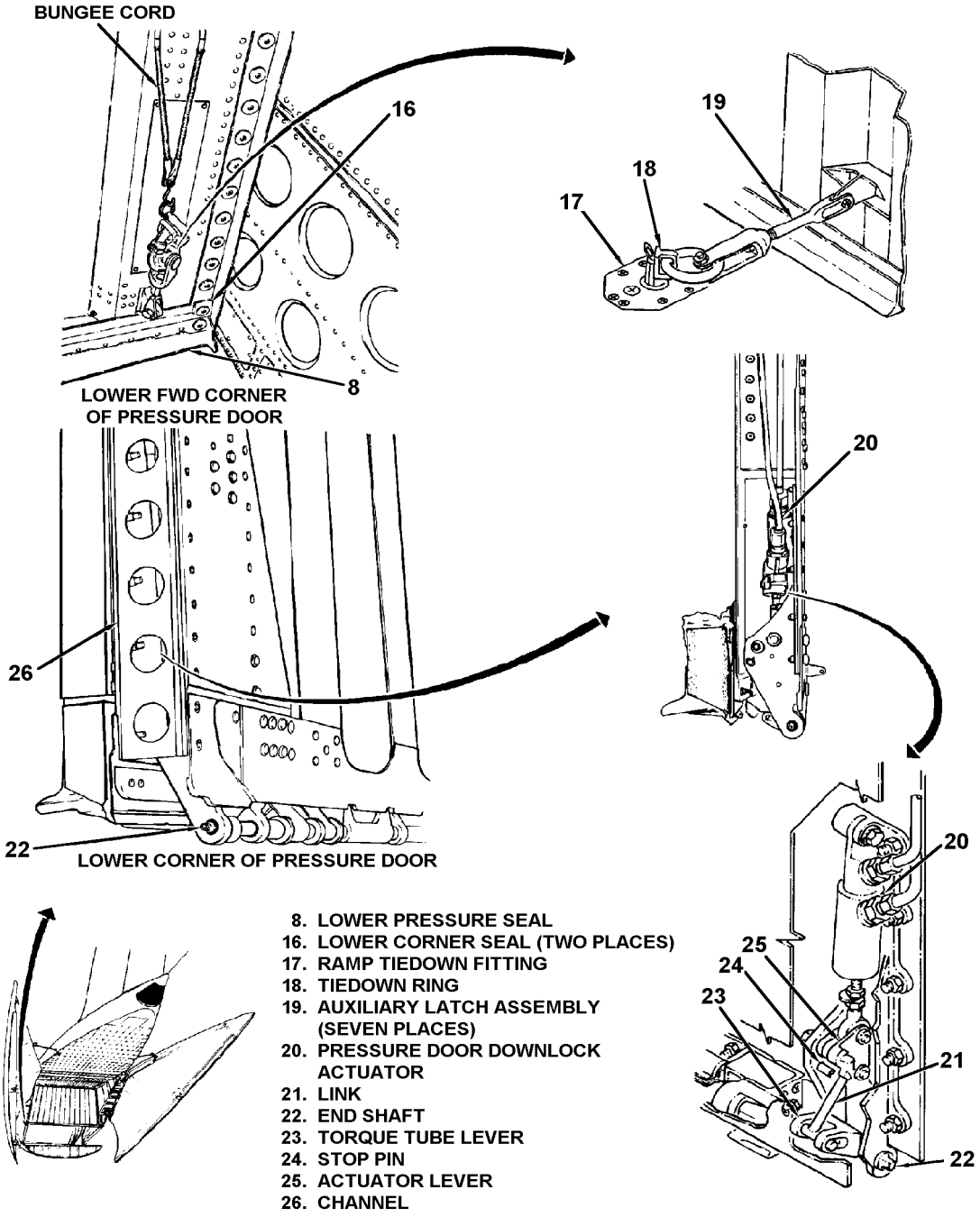

8. LOWER PRESSURE SEAL
16. LOWER CORNER SEAL (TWO PLACES)
17. RAMP TIEDOWN FITTING
18. TIEDOWN RING
19. AUXILIARY LATCH ASSEMBLY (SEVEN PLACES)
20. PRESSURE DOOR DOWNLOCK ACTUATOR
21. LINK
22. END SHAFT
23. TORQUE TUBE LEVER
24. STOP PIN
25. ACTUATOR LEVER
26. CHANNEL

Pressure Door System Components (Sheet 2 of 3)

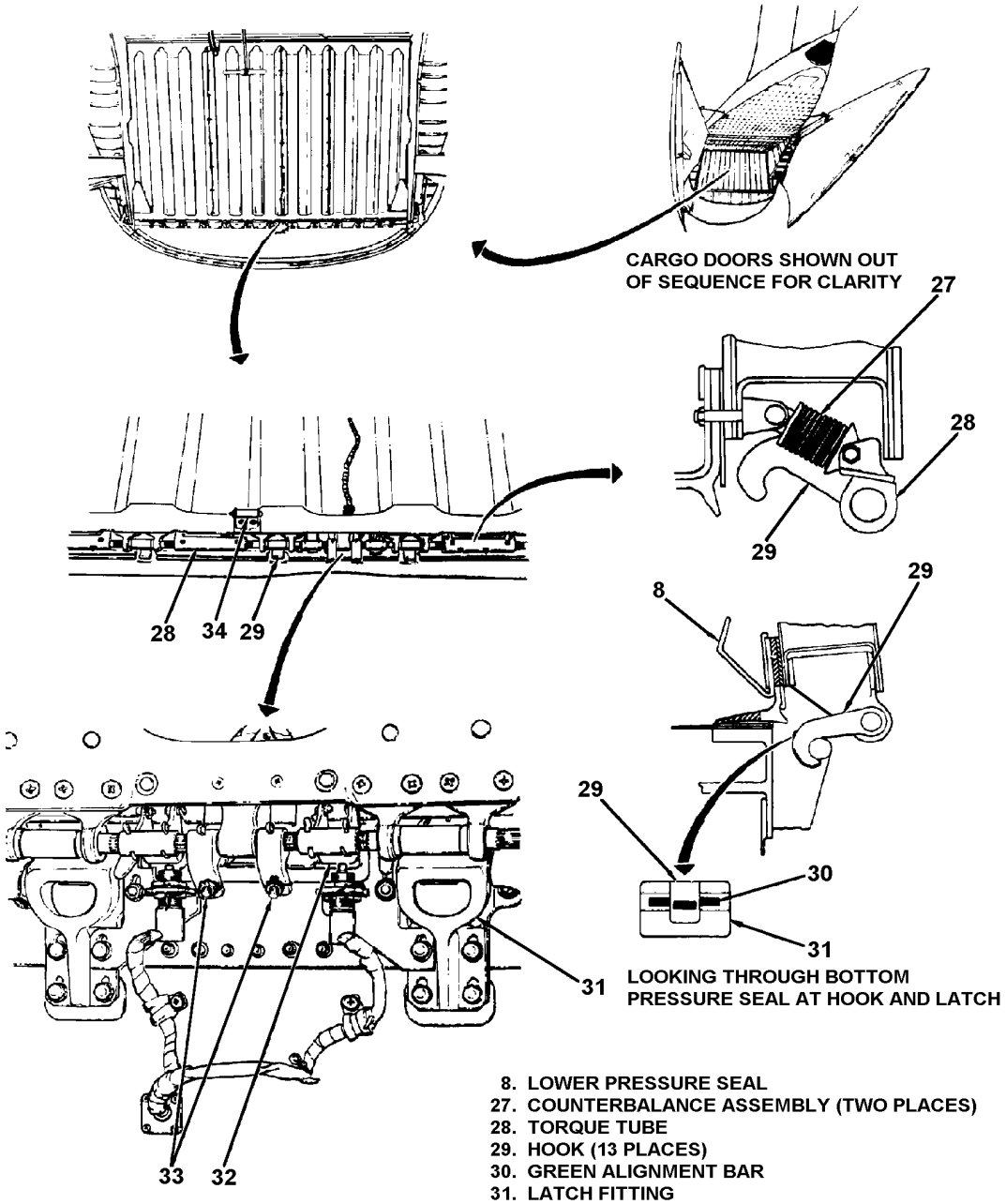

8. LOWER PRESSURE SEAL
27. COUNTERBALANCE ASSEMBLY (TWO PLACES)
28. TORQUE TUBE
29. HOOK (13 PLACES)
30. GREEN ALIGNMENT BAR
31. LATCH FITTING
32. BELLCRANK (TWO PLACES)
33. UPLOCK ROLLER

Pressure Door System Components (Sheet 3 of 3)

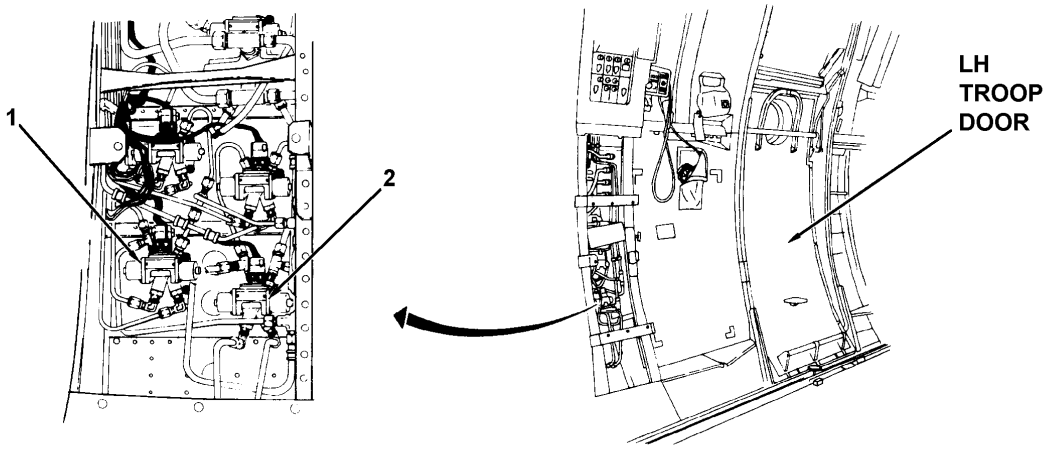

1. PRESSURE DOOR LOCKS SELECTOR VALVE
2. PRESSURE DOOR SELECTOR VALVE

Pressure Door Selector Valves

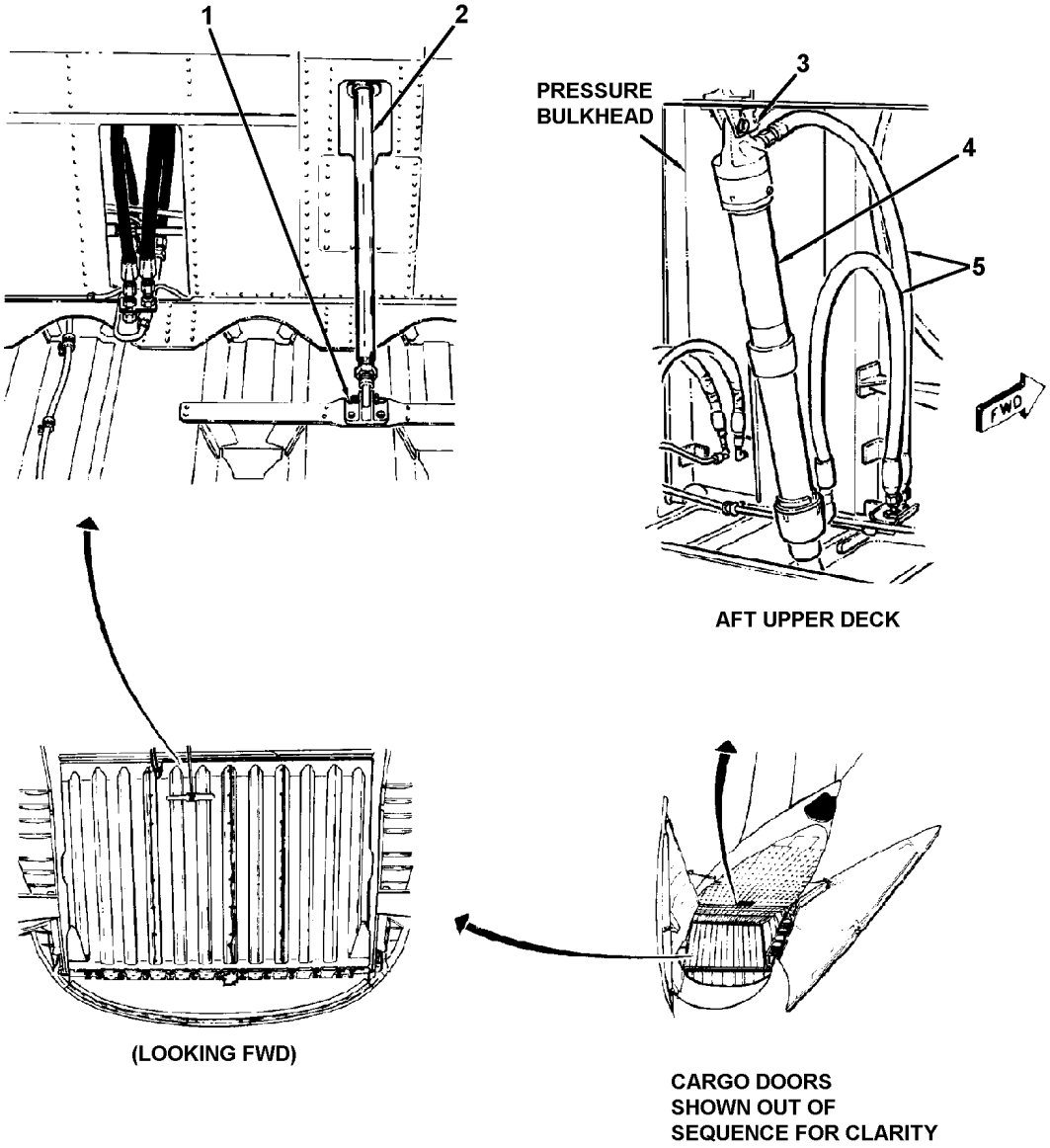

1. LOWER PRESSURE DOOR ATTACH FITTING
2. PRESSURE DOOR ACTUATOR PISTON
3. UPPER PRESSURE DOOR ATTACH FITTING
4. PRESSURE DOOR ACTUATOR
5. HYDRAULIC HOSES

Pressure Door Actuator and Flow Control Components

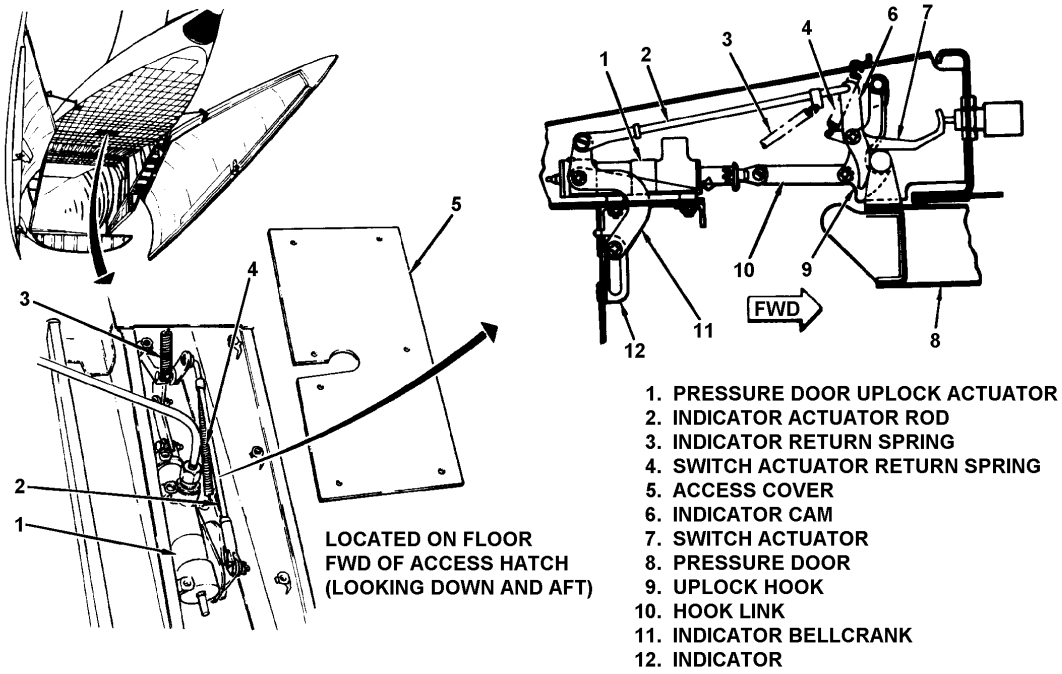

Pressure Door Uplock Mechanism

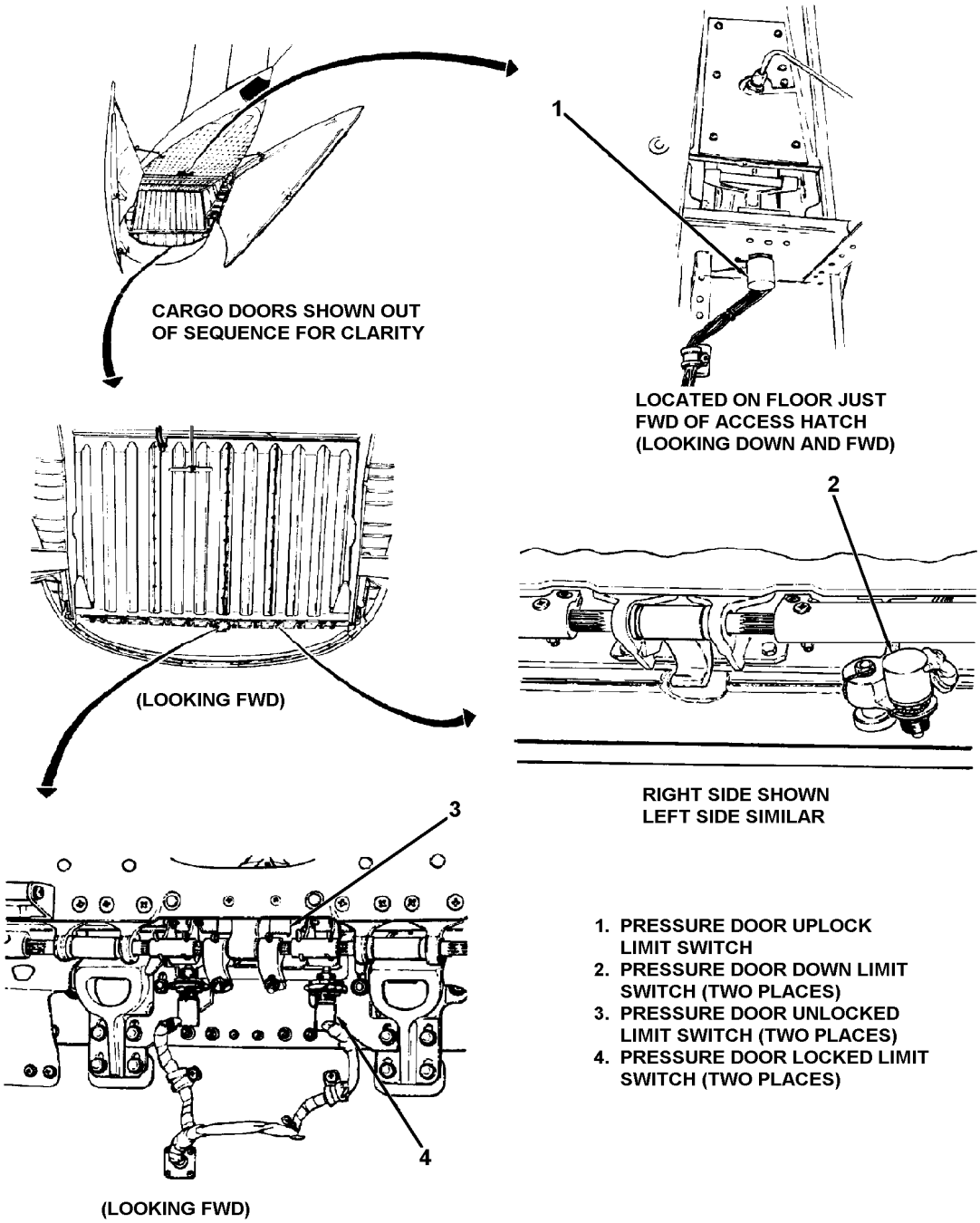

1. PRESSURE DOOR UPLOCK LIMIT SWITCH
2. PRESSURE DOOR DOWN LIMIT SWITCH (TWO PLACES)
3. PRESSURE DOOR UNLOCKED LIMIT SWITCH (TWO PLACES)
4. PRESSURE DOOR LOCKED LIMIT SWITCH (TWO PLACES)

Pressure Door Limit Switches

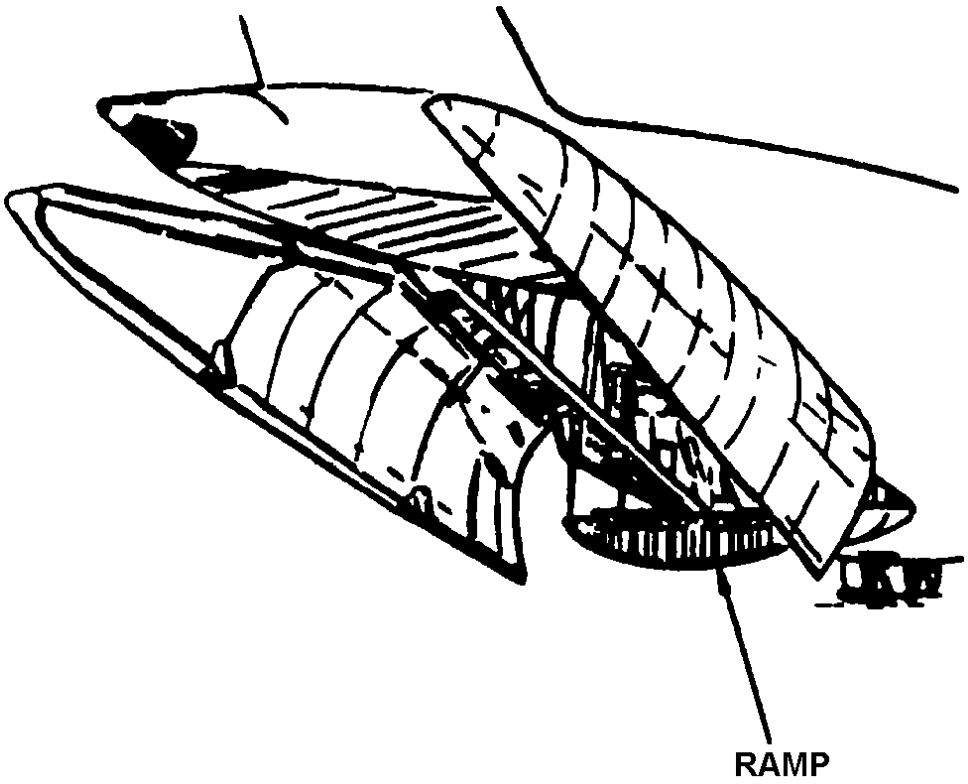

Cargo Ramp

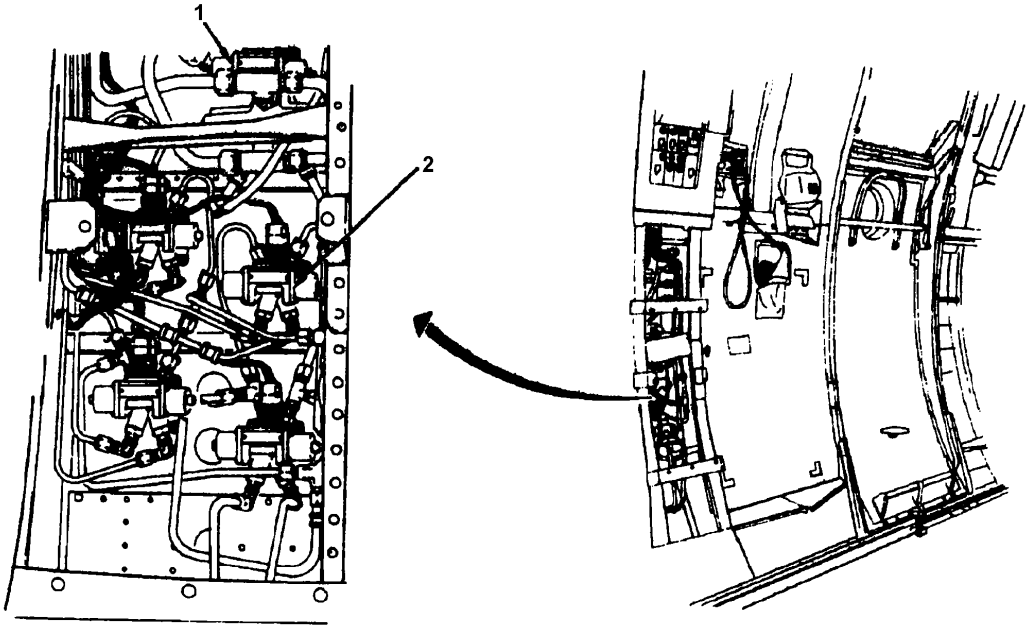

1. RAMP SELECTOR VALVE
2. RAMP LOCKS SELECTOR VALVE

Cargo Ramp Selector Valves

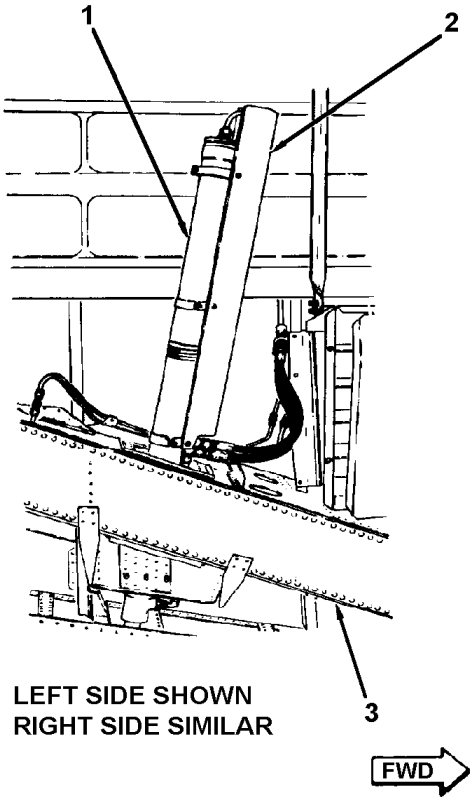

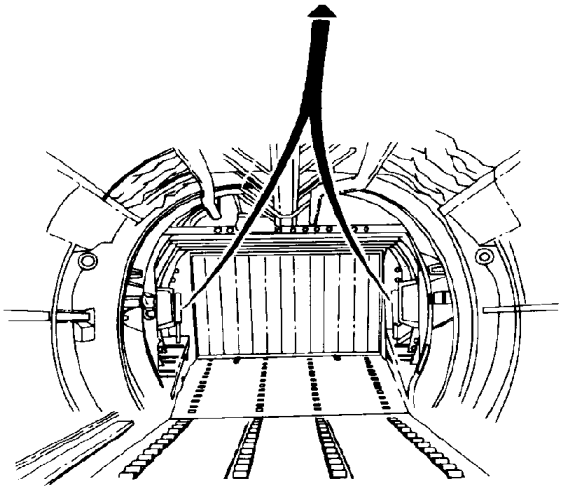

(LOOKING AFT)

1. RAMP ACTUATOR
2. COVER
3. SLOPING LONGERON

Cargo Ramp Actuator and Flow Control Components

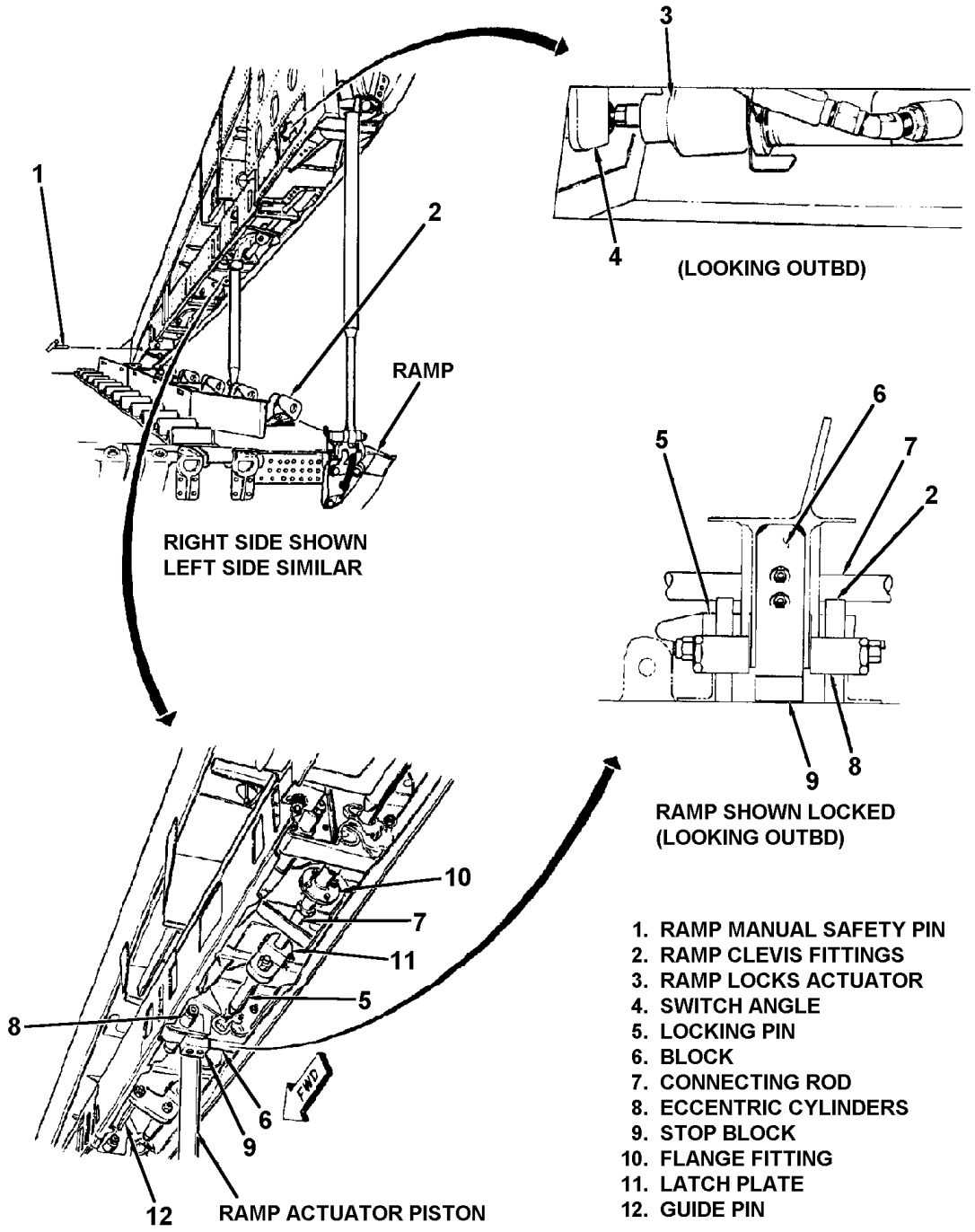

1. RAMP MANUAL SAFETY PIN
2. RAMP CLEVIS FITTINGS
3. RAMP LOCKS ACTUATOR
4. SWITCH ANGLE
5. LOCKING PIN
6. BLOCK
7. CONNECTING ROD
8. ECCENTRIC CYLINDERS
9. STOP BLOCK
10. FLANGE FITTING
11. LATCH PLATE
12. GUIDE PIN

Ramp Latching Mechanism

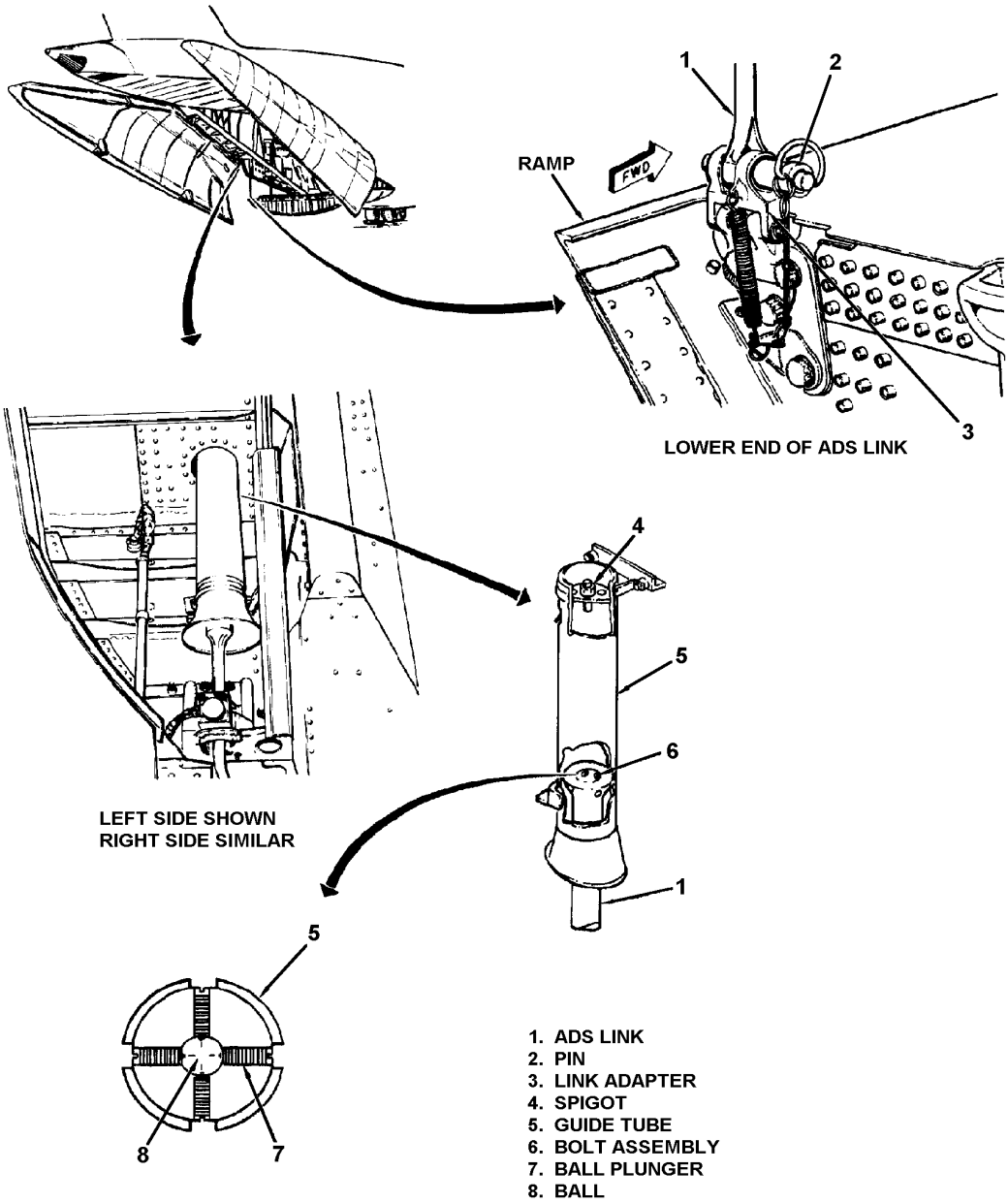

Aerial Delivery System (ADS) Links and Guide Tubes

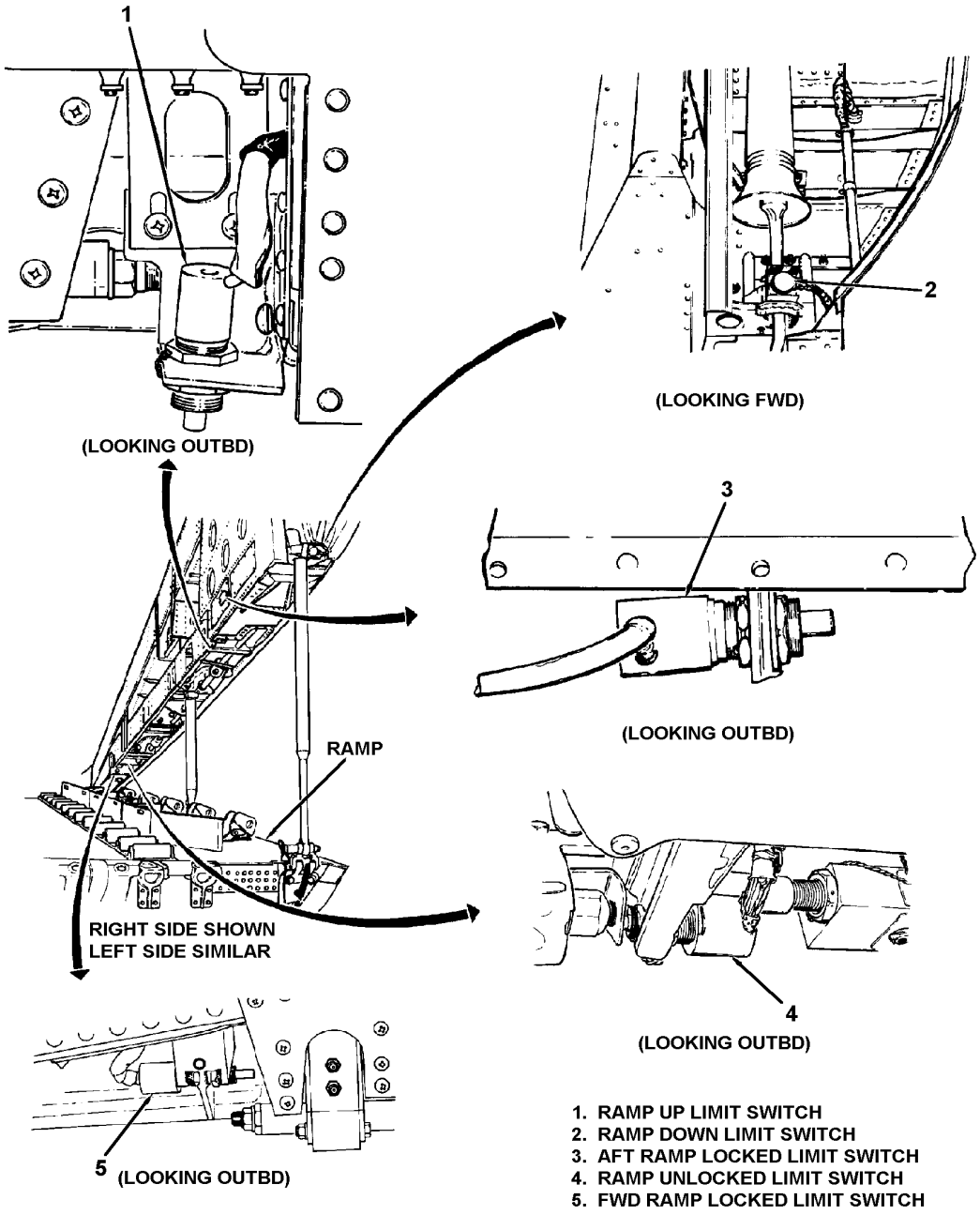

Cargo Ramp Limit Switches

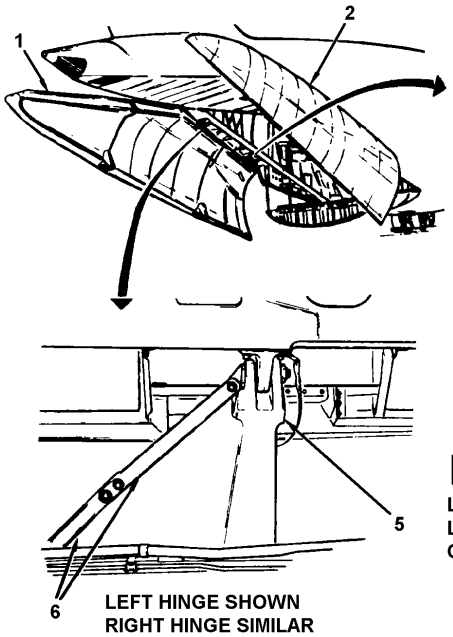

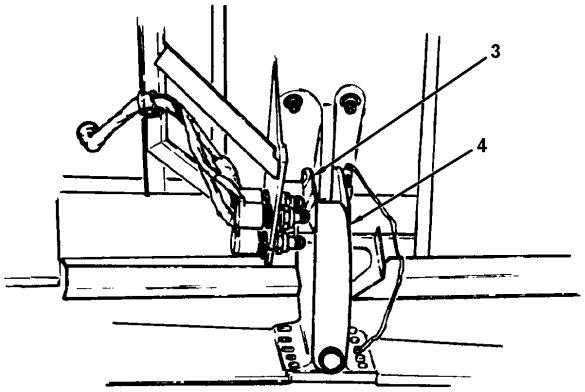

NOTE

LIMIT SWITCHES ON LEFT FWD HINGE ONLY

1. LEFT PETAL DOOR
2. RIGHT PETAL DOOR
3. CAM LEVER
4. FWD PETAL DOOR HINGE
5. AFT PETAL DOOR HINGE
6. SPLICE PLATES

Petal Doors

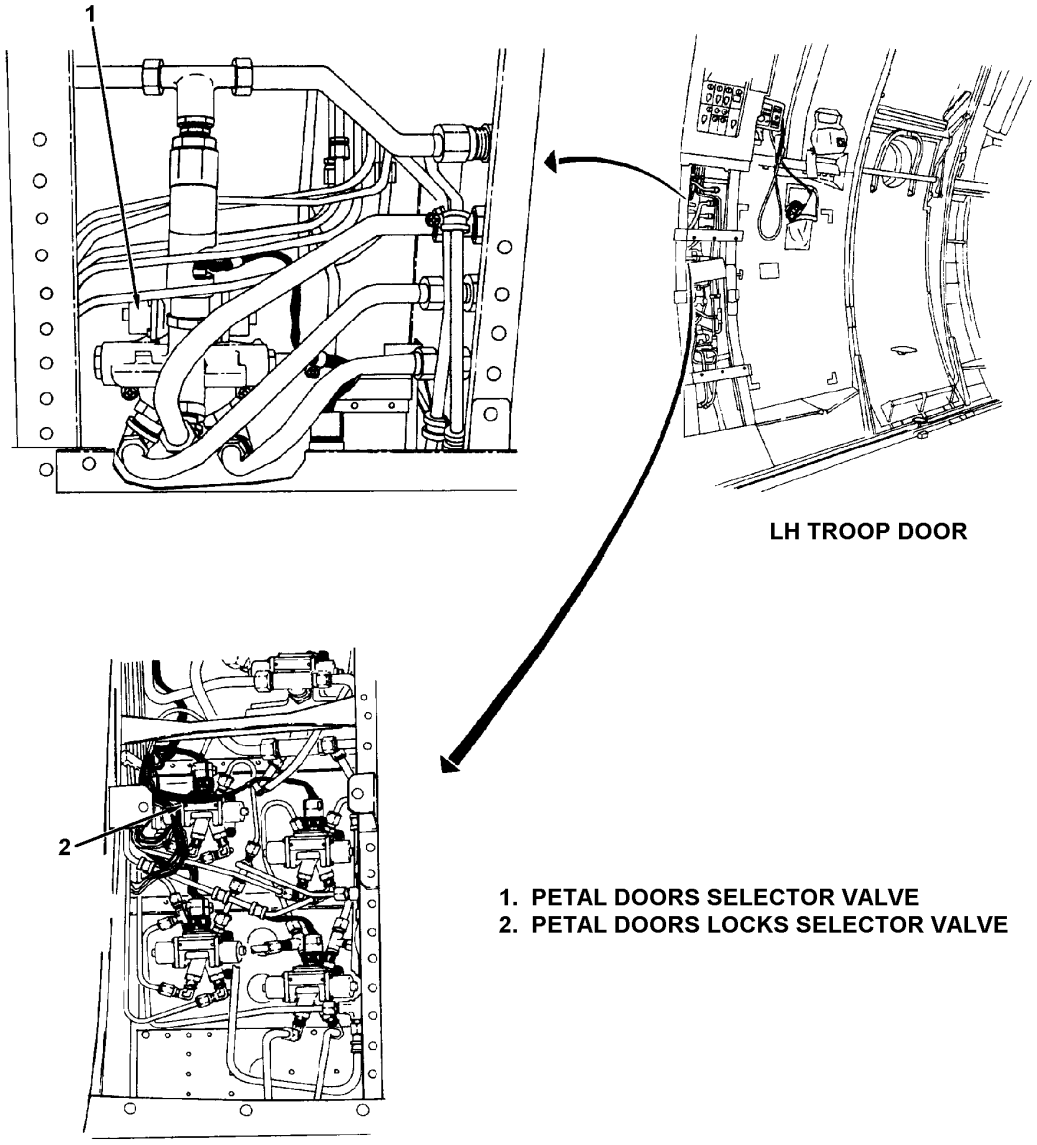

Petal Doors Selector Valves

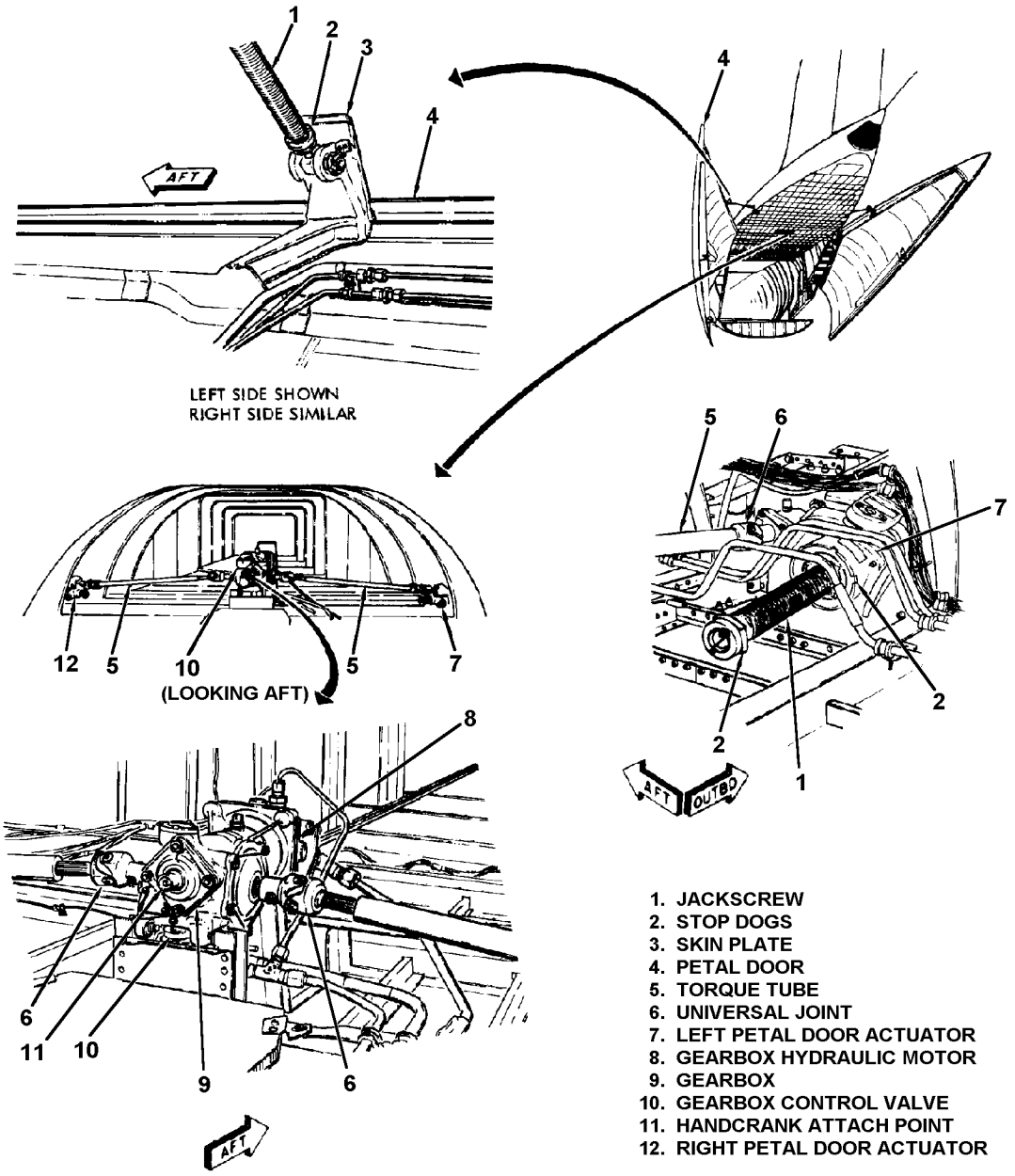

1. JACKSCREW
2. STOP DOGS
3. SKIN PLATE
4. PETAL DOOR
5. TORQUE TUBE
6. UNIVERSAL JOINT
7. LEFT PETAL DOOR ACTUATOR
8. GEARBOX HYDRAULIC MOTOR
9. GEARBOX
10. GEARBOX CONTROL VALVE
11. HANDCRANK ATTACH POINT
12. RIGHT PETAL DOOR ACTUATOR

Petal Doors Actuating Mechanism

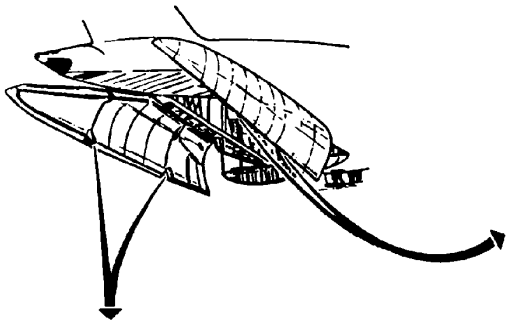

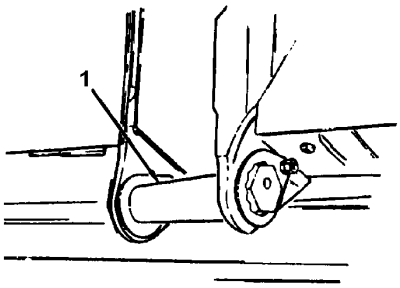

RIGHT PETAL DOOR ONLY

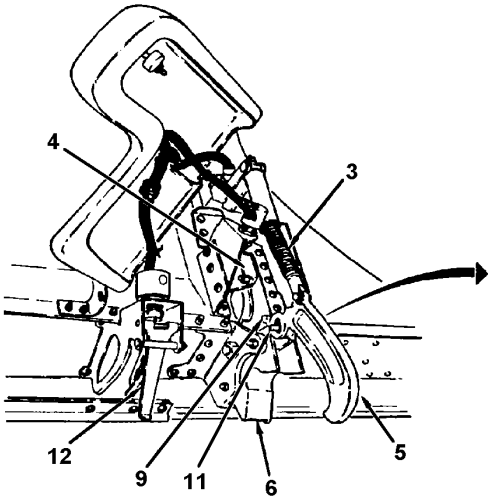

FWD LOCK SHOWN
AFT LOCK SIMILAR
(HOOK SHOWN, UNLOCKED)

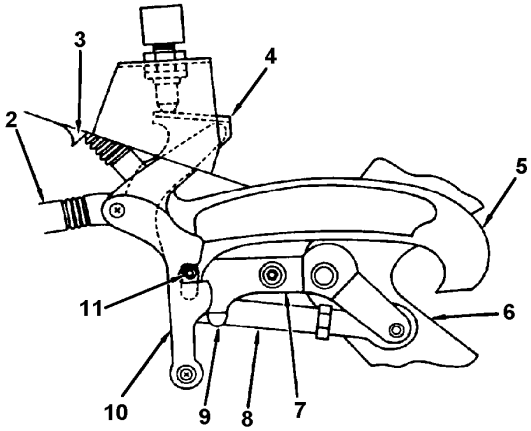

(HOOK SHOWN LOCKED)

1. ECCENTRIC BOLT AND BUSHING
2. CATCH SPRING ASSEMBLY
3. SPRING STRUT
4. SWITCH LEVER
5. LATCH HOOK
6. HOOK FITTING
7. SIDE PLATES
8. PETAL DOORS LOCK ACTUATOR
9. UNLOCKING LUG (PART OF SIDE PLATES)
10. CATCH LEVER
11. PIN
12. SWITCH LEVER

Petal Doors Latching Mechanism

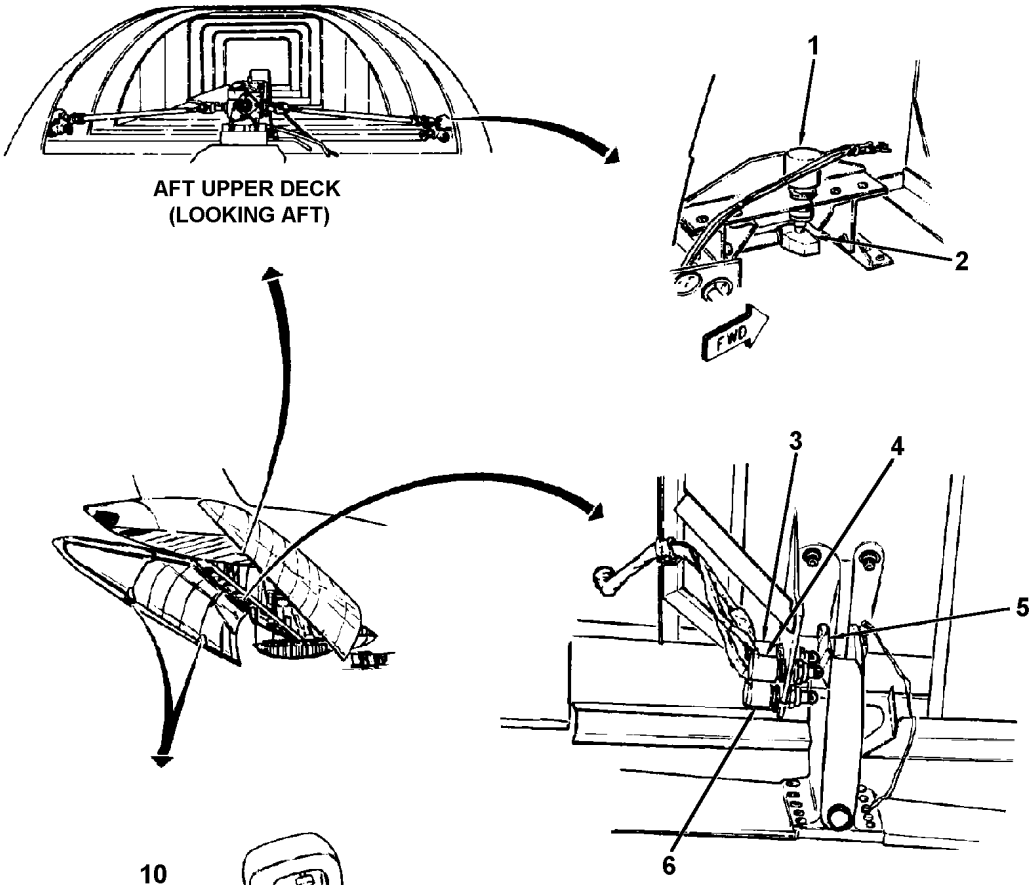

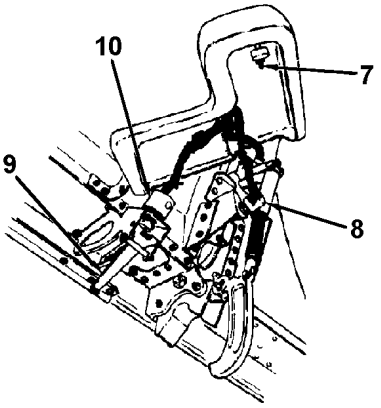

(LOOKING OUTBD)
FWD LOCK SHOWN
AFT LOCK SIMILAR

1. PETAL DOORS ACTUATOR STOP LIMIT SWITCH
2. STRIKER
3. PETAL DOORS ADS FULLY OPEN POSITION LIMIT SWITCH
4. PETAL DOORS 55-DEGREE LIMIT SWITCH
5. CAM
6. PETAL DOORS 80-DEGREE LIMIT SWITCH
7. PETAL DOORS UNLOCKED LIMIT SWITCH
8. PETAL DOORS LOCKS OVERCENTER LIMIT SWITCH
9. STRIKER LEVER
10. PETAL DOORS CLOSED LIMIT SWITCH

Petal Doors Limit Switches

Interior Doors Subsystem

Three interior doors separate forward compartments from the cargo compartment. The flight station entrance door provides a closure between the flight station and cargo compartment. The lavatory door provides privacy from the cargo compartment. The avionics access door is mounted behind the flight station ladder and provides access to the avionics bay.

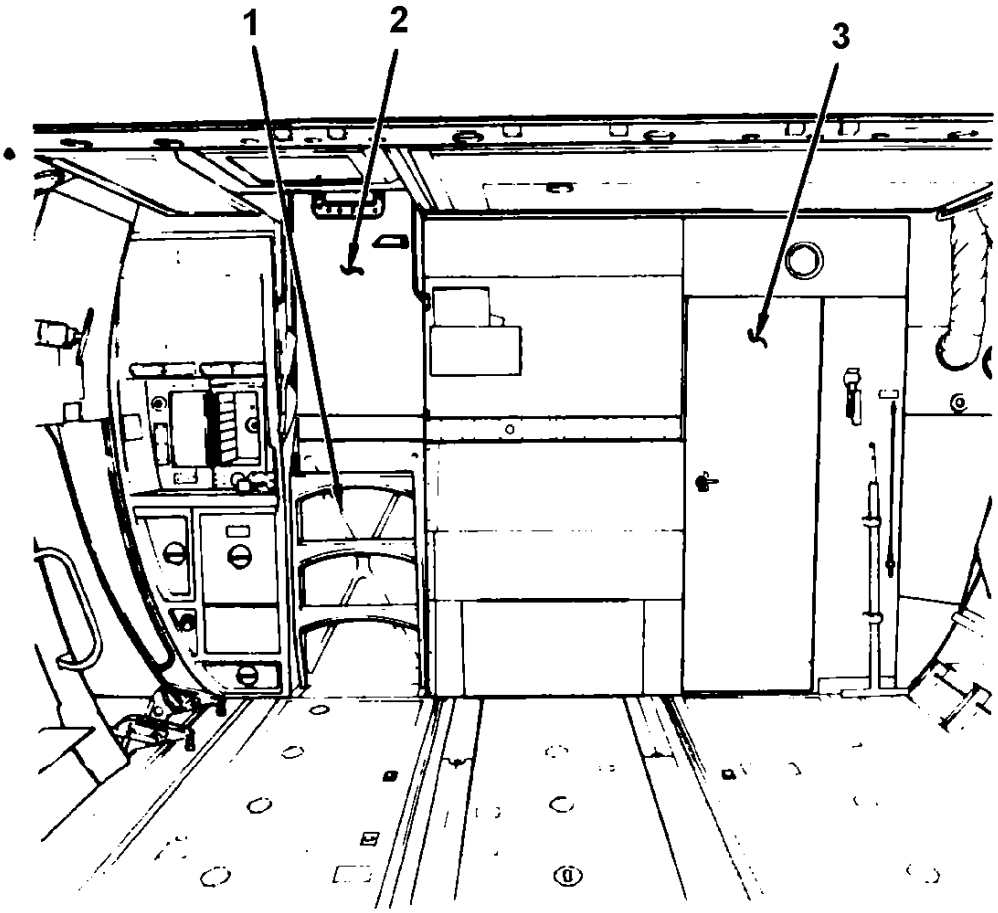

(LOOKING FWD)

1. **AVIONICS BAY ACCESS DOOR**
2. **FLIGHT STATION ENTRANCE DOOR**
3. **LAVATORY ENTRANCE DOOR**

Interior Doors

Door Warning Subsystem

The door warning subsystem provides a visual indication when one of the following doors is not locked: the crew entrance door, both troop doors, cargo doors, and stabilizer access door. Limit switches sense when any of these doors are unlocked and cause the NOT LOCKED light for the affected door to come on. A DOOR OPEN annunciator light also comes on to alert the crew when a door is unlocked. Each door contains a panel mounted bypass switch. Normally, the switch allows the limit switch to turn on the NOT LOCKED light and the DOOR OPEN annunciator light. If the bypass switch is placed to the BYPASS position, the DOOR OPEN annunciator light does not come on, but the light can still be turned on by any other door not in bypass. The door warning system also provides inputs to the takeoff warning system.

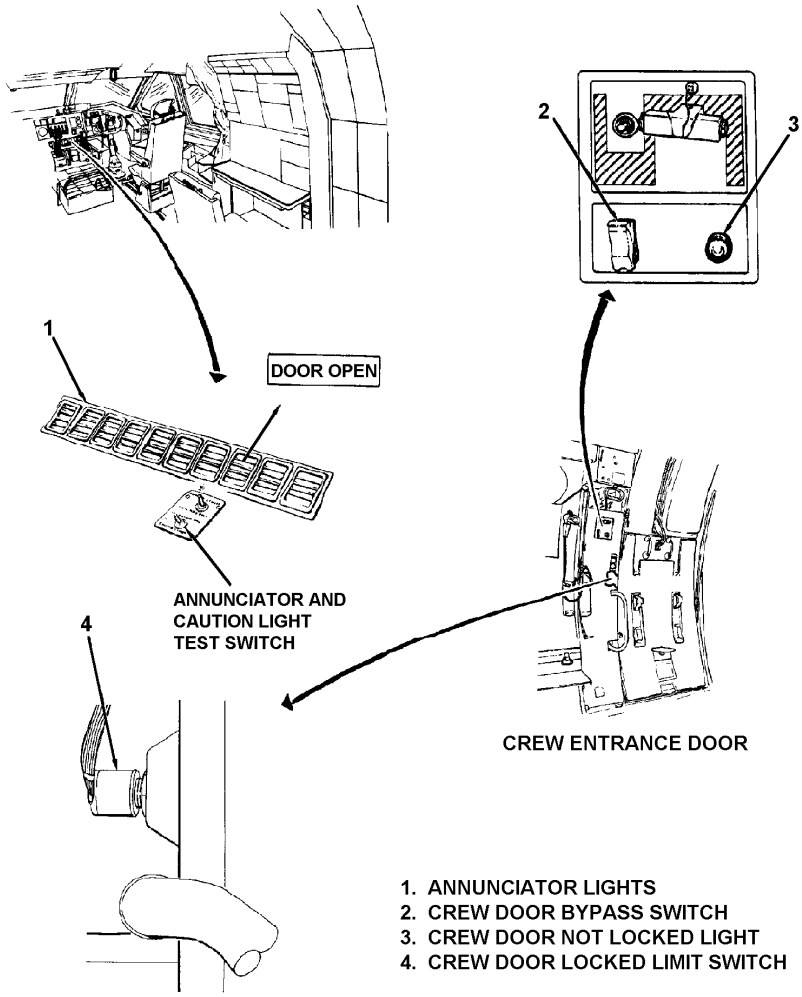

Door Warning Subsystem Components (Sheet 1 of 2)

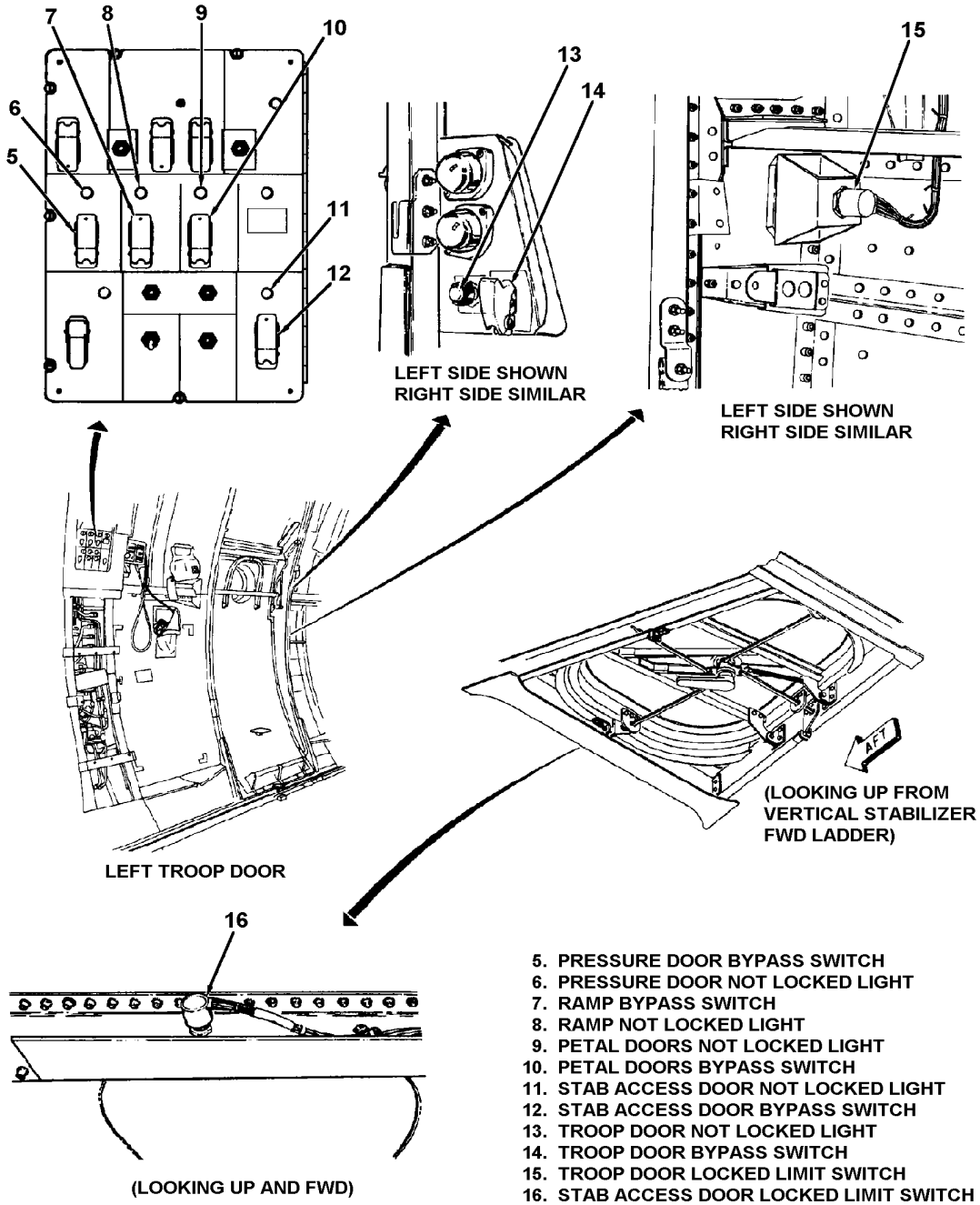

5. PRESSURE DOOR BYPASS SWITCH
6. PRESSURE DOOR NOT LOCKED LIGHT
7. RAMP BYPASS SWITCH
8. RAMP NOT LOCKED LIGHT
9. PETAL DOORS NOT LOCKED LIGHT
10. PETAL DOORS BYPASS SWITCH
11. STAB ACCESS DOOR NOT LOCKED LIGHT
12. STAB ACCESS DOOR BYPASS SWITCH
13. TROOP DOOR NOT LOCKED LIGHT
14. TROOP DOOR BYPASS SWITCH
15. TROOP DOOR LOCKED LIMIT SWITCH
16. STAB ACCESS DOOR LOCKED LIMIT SWITCH

Door Warning Subsystem Components (Sheet 2 of 2)

NOTES

WINDOWS

Windshield Inspection

a. Flight Station Electrically Heated Windshield or Window Replacement Criteria. Windshields and windows in the airplane remain structurally safe for pressurized flight even though cracks, bubbles, and or delamination are present. The windshield window is designed to withstand pressures many times that required for normal flight loads regardless of the degree of delamination and bubbles, electrical arcing and/or overtemperature conditions. Timely replacement of windshields/windows should be accomplished if any of the following conditions occur:

NOTE: Delamination is the separation of the glass and vinyl laminates. It usually begins around the edges of the panel and extends inward as more air is admitted between the layers due to the flexing of the glass.

(1) There is evidence of vinyl interlayer bubbling indicating the windshield has been severely overheated. Check the windshield heat control system for proper operation per T.O. lC-141B-2-30JG-40-1, Section 3. It is possible for bubbles to occur for reasons other than overheat, such as ultraviolet radiation and/or minute traces of water vapor between window layers at the time of manufacture. A windshield/window with bubbles of this nature will not require replacement if the heat control system has been operating satisfactorily. Bubbles within one inch of a temperature sensing thermistor are allowed provided no more than five which are larger than 1/16 inch are present and none lie directly over the thermistor.

NOTE: A spare windshield-mounted thermistor is contained in the pilot's/copilot's windshields and the center windshield. In the event the thermistor connected to the control box should fail, or exceed the bubble limitations noted above, the spare thermistor can be employed and the windshield need not be replaced provided the bubble and other defect limitations noted are not exceeded.

(2) There is extensive delamination of the windshield/window. A windshield/window need not be replaced due to delamination until 20 percent of the window area is affected, vision is sufficiently impaired, severe electrical arcing occurs, or if windshield heat is lost and the heat control system otherwise checks out satisfactorily. Impaired vision may be defined as the distortion, normally evident in delaminated areas, present to a degree that a flying hazard exists.

(3) There is shattered or extensively deteriorated glass.

WARNING: Do not check the surface temperature of cracked or crazed glass with the bare hand.

(4) There is loss of heat. Check power and control elements. All windshields except clear vision windshields have a stand-by control sensor. If the control

sensor is inoperative, use the stand-by. If this does not restore heat, change as soon as practical.

CAUTION: If windshield attachment fasteners are found loose, do not retorque. If fastener is identified as leaking, remove fastener and reseal, using same technique as called for in T.O. lC-141B-2-56JG-00-1, section 1.

(5) Window found leaking because of “melt down” may be removed and reinstalled, using MIL-S-81733 as specified.

b. Plastic side windows replacement criteria. Scratches in plastic side windows, including deep scratches, do not detract from the structural integrity of the windows. Plastic side windows need not be replaced merely because of scratches. Replacement should be accomplished only if the condition causes impairment of vision. It is important that the specific cleaning and polishing procedures be closely followed to maintain plastic windows and extend their service life.

CAUTION: If window attachment fasteners are found loose, the nuts may be retorqued to 10-15 inch pounds. Nuts should only be barely snug and washers should not move. Do not overtighten, otherwise, delamination and/or cracking could result.

Windshield Heating System

An electrical heating system provides protection to all the flight station windshields. The three front windshield panels are of laminated glass and vinyl construction with a thin coating of transparent, electrically conductive material between the outer glass layer and the vinyl interlayer. This coating provides both ice and fog protection and maintains an optimum temperature for protection against bird strikes. The clear vision and side windshield panels are protected against fogging only. Windshield Heat Switches: Three, three-position (“HIGH,” “OFF,” “NORMAL”) lever-lock type switches, incorporating the locking feature in the “OFF’ position, are located on the overhead control panel. The switches are placed in ”NORMAL" for defogging and deicing. If severe icing conditions are encountered, the switches can be placed in the “HIGH” position which increases the voltage to the forward windshields for faster heat cycles. The “HIGH” position is intended to be used only in flight whenever the “NORMAL” position does not provide enough heat. After landing and while taxiing, the switch should be returned to the “NORMAL” or “OFF” position if the “HIGH” position was used in flight. The heat on the side windshields does not increase with a change in switch position. Opening a clear vision windshield cuts power to both side windshields on that side. “COLD START” switches are located on the overhead control panel to provide manual heat control to the forward windshields when the temperature at the sensor is below -43 degrees C. The manual cycling should be 5 seconds on and 10 seconds off, until the windshield temperature reaches -43 degrees C when automatic operation commences. The side windshield heat starts at temperatures down to -54 degrees C.

CAUTION: The windshield heat switches should be in the “NORMAL” position when using the “COLD START” switches.

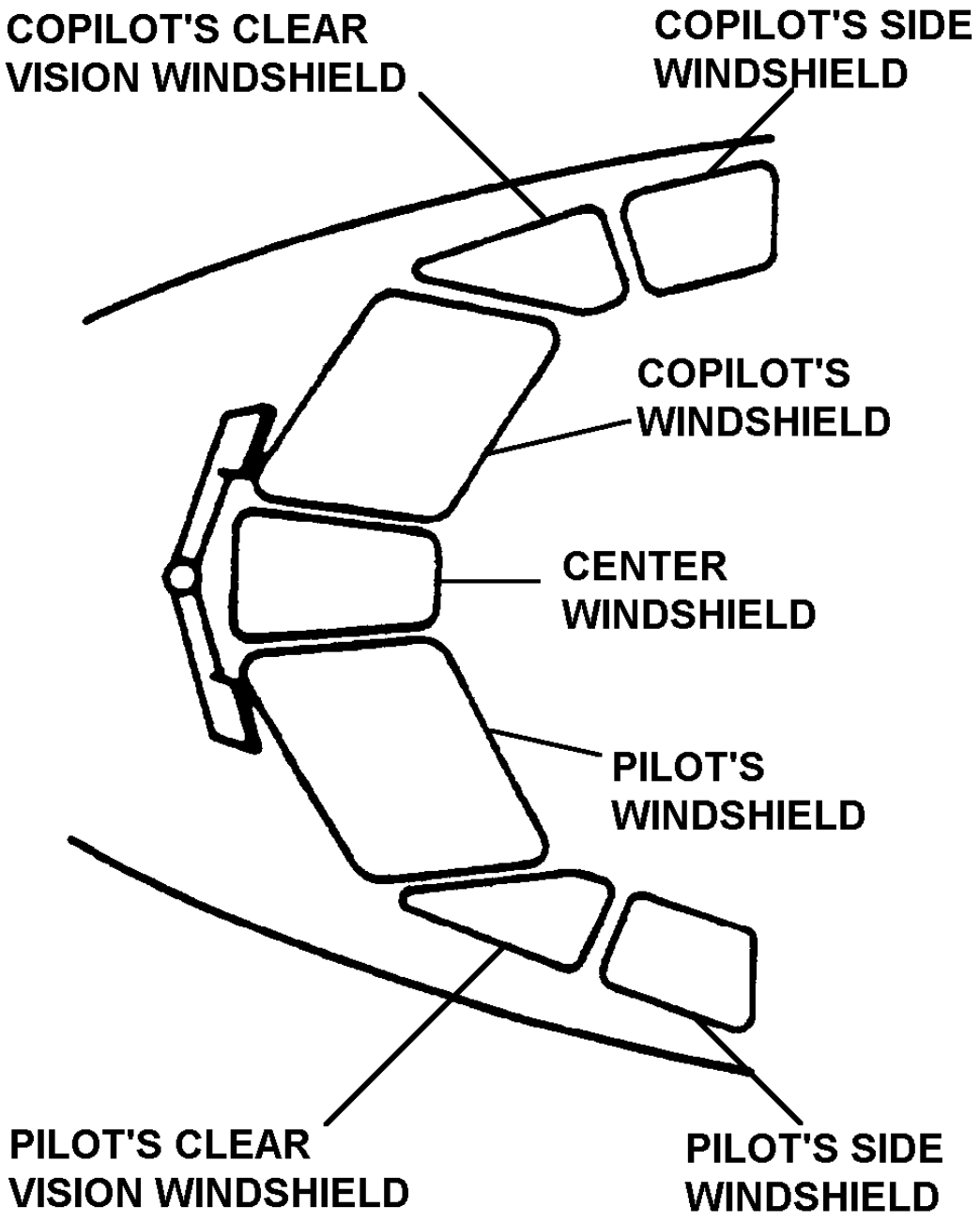

Flight Station Windows Identified

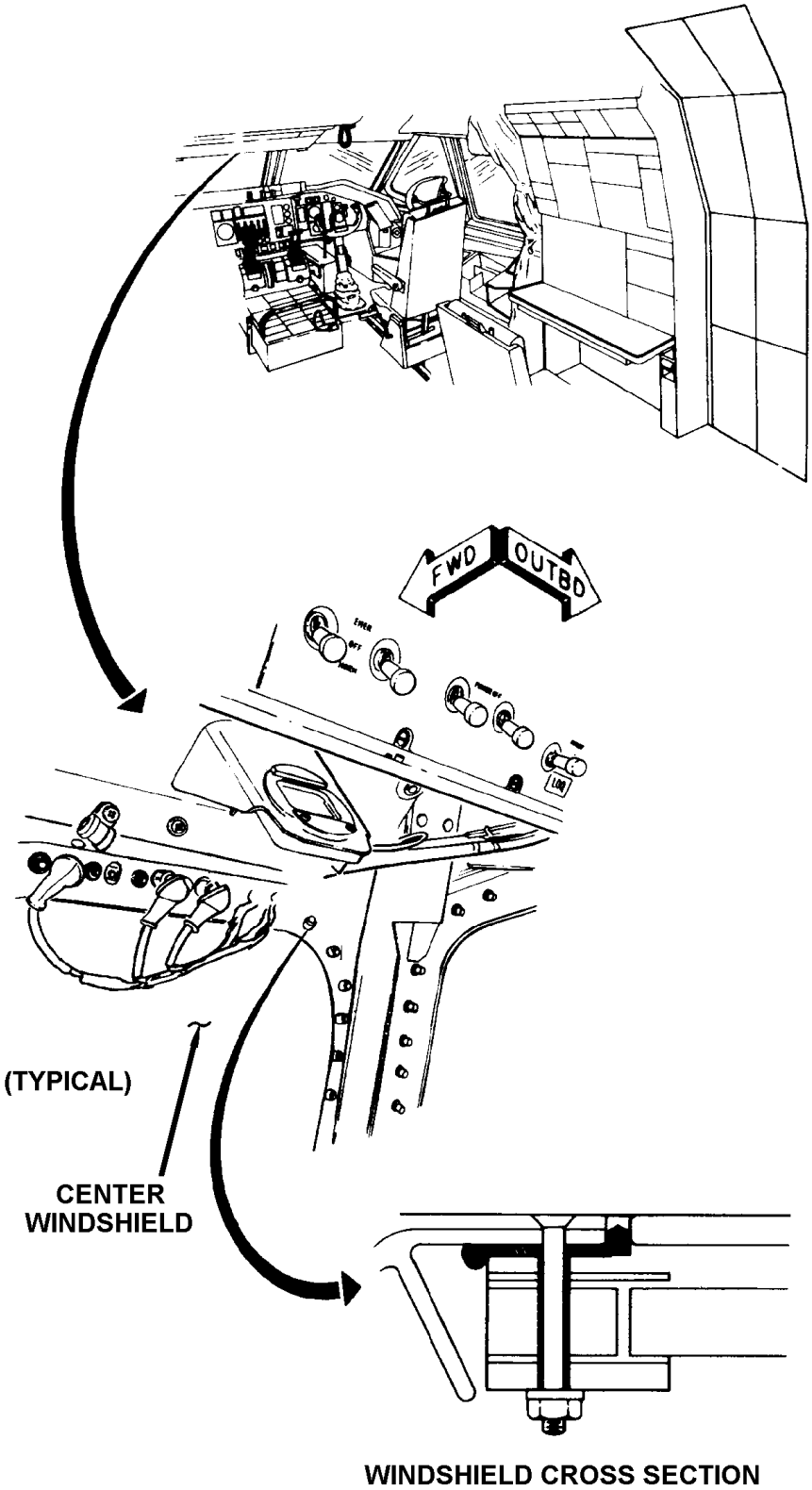

Center Windshield and Windshield Cross Section

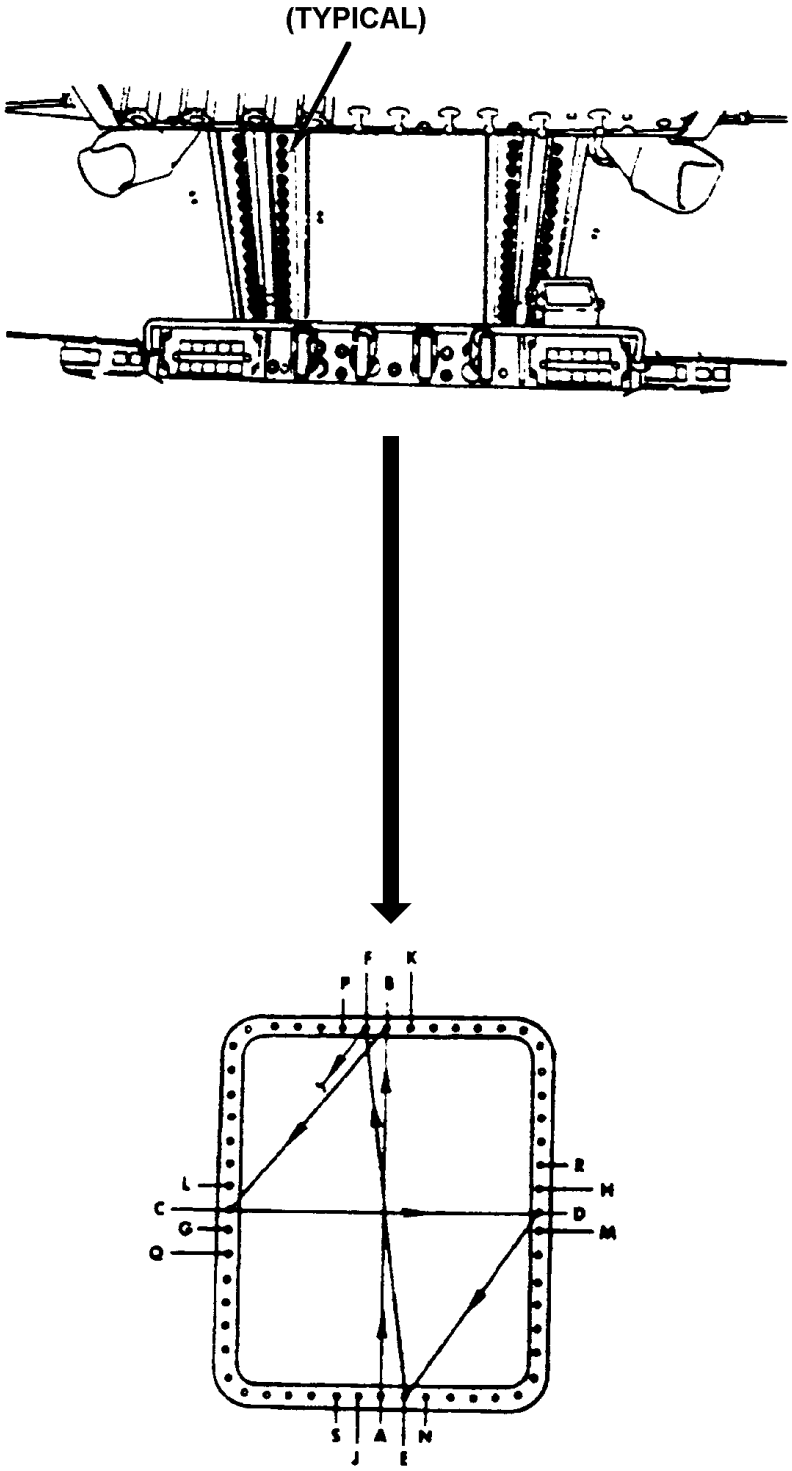

Center Windshield Torque Pattern Illustration

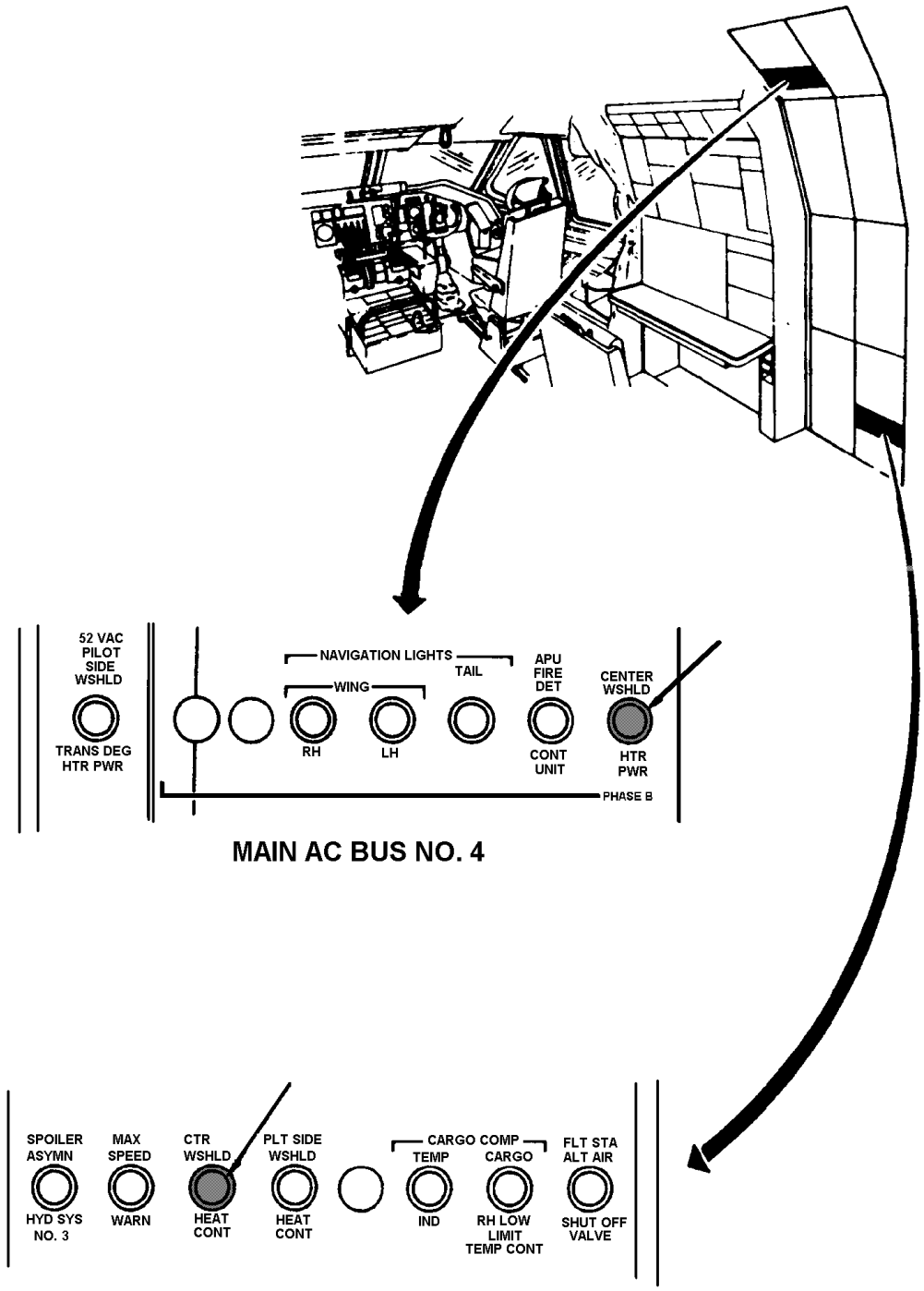

Center Windshield Heat Circuit Breakers

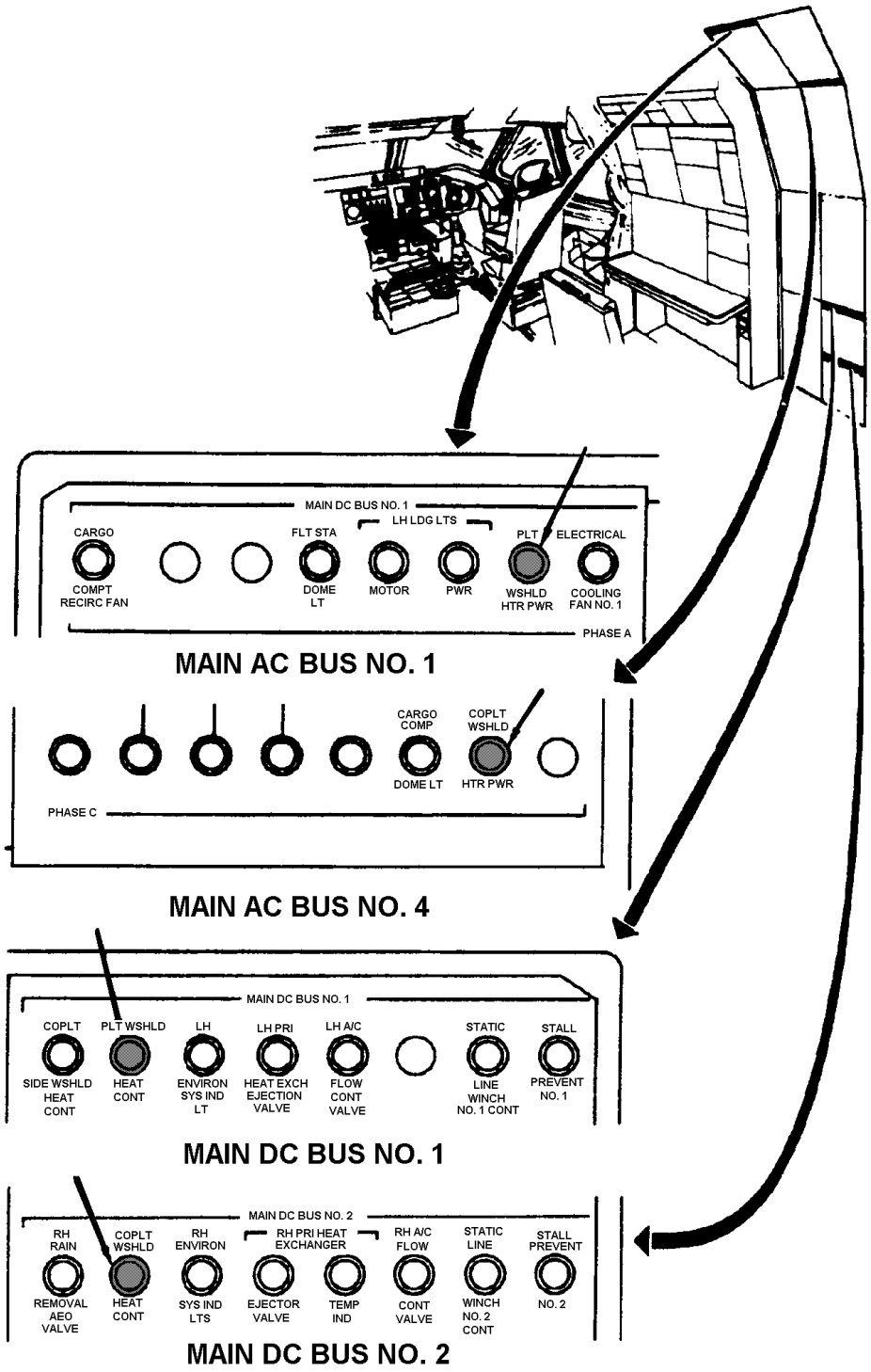

Pilot's and Copilot's Windshield Heat Circuit Breakers

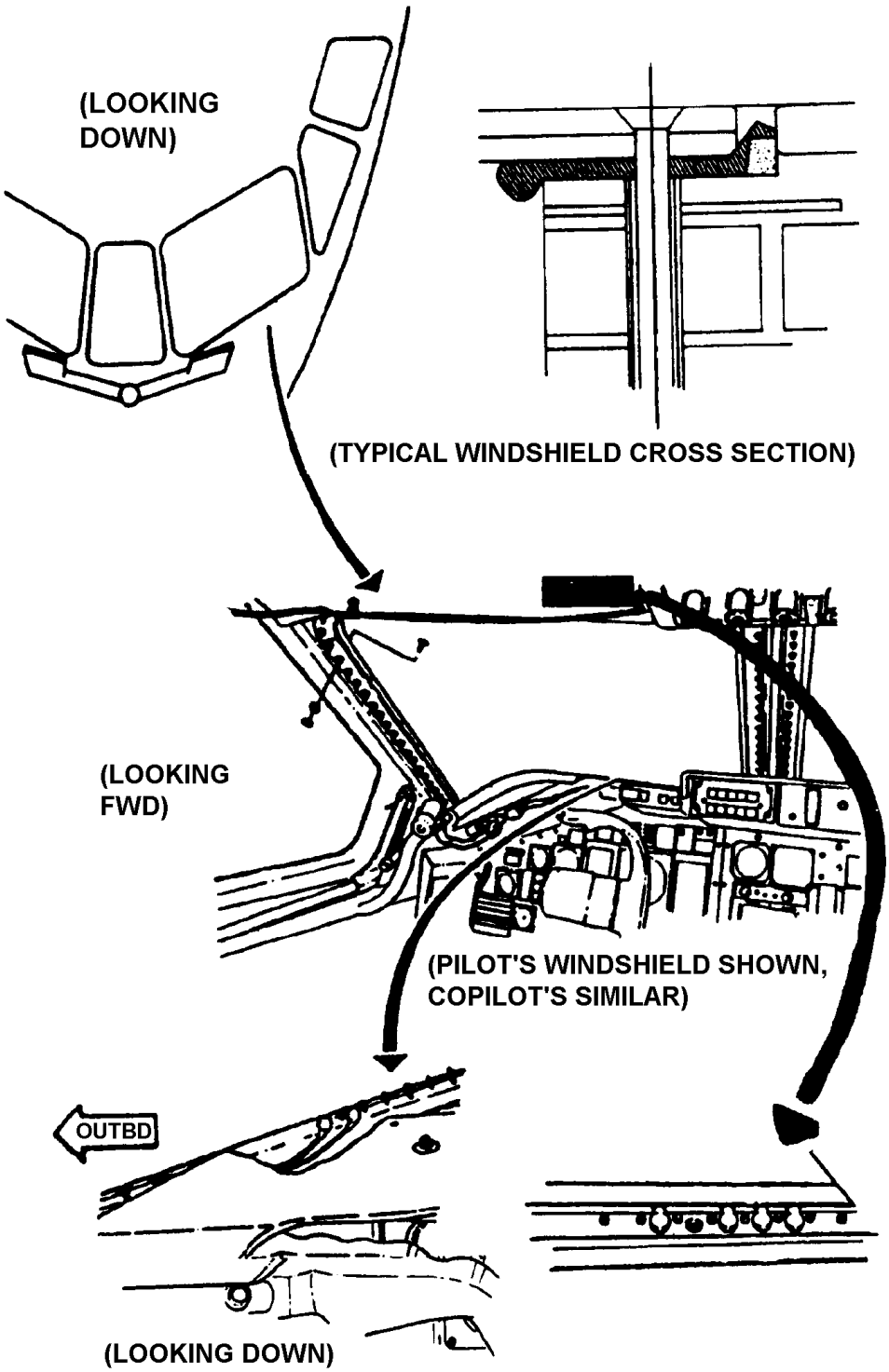

Pilot's Windshield

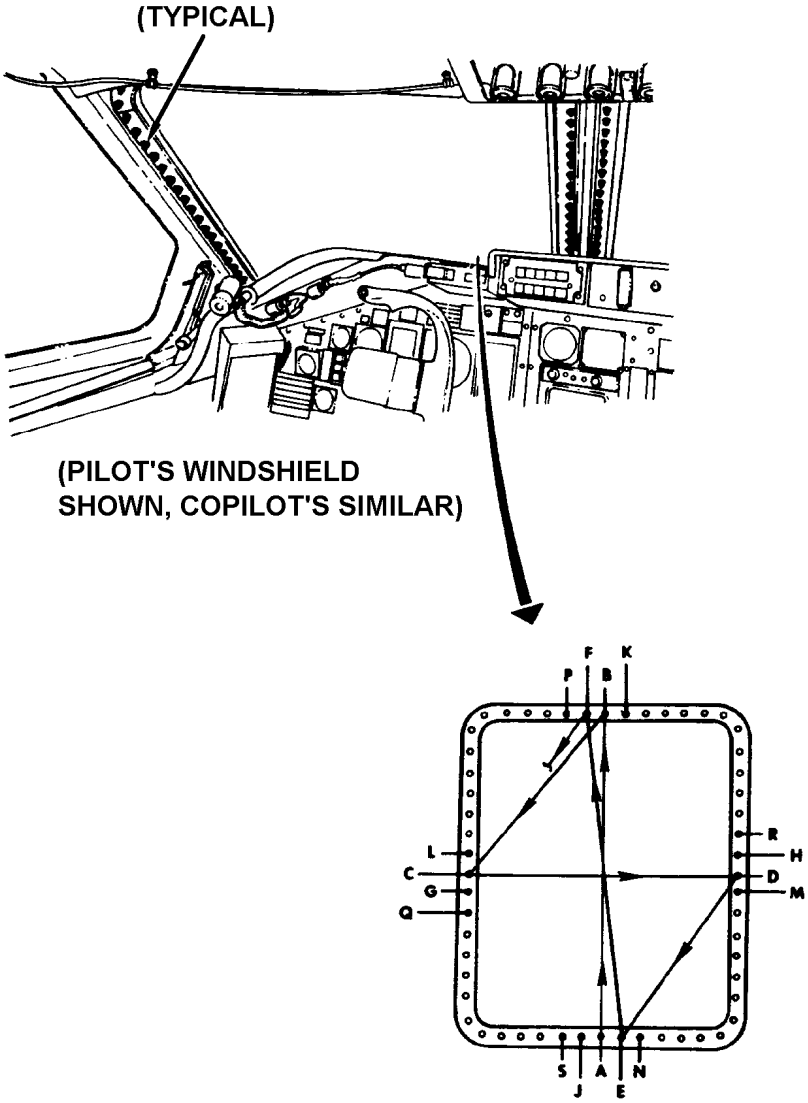

TORQUE PATTERN

Pilot's Windshield Torque Pattern Illustration

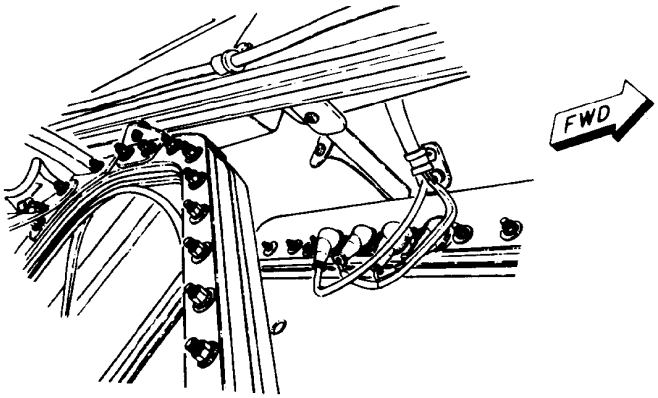

(LOOKING UP)

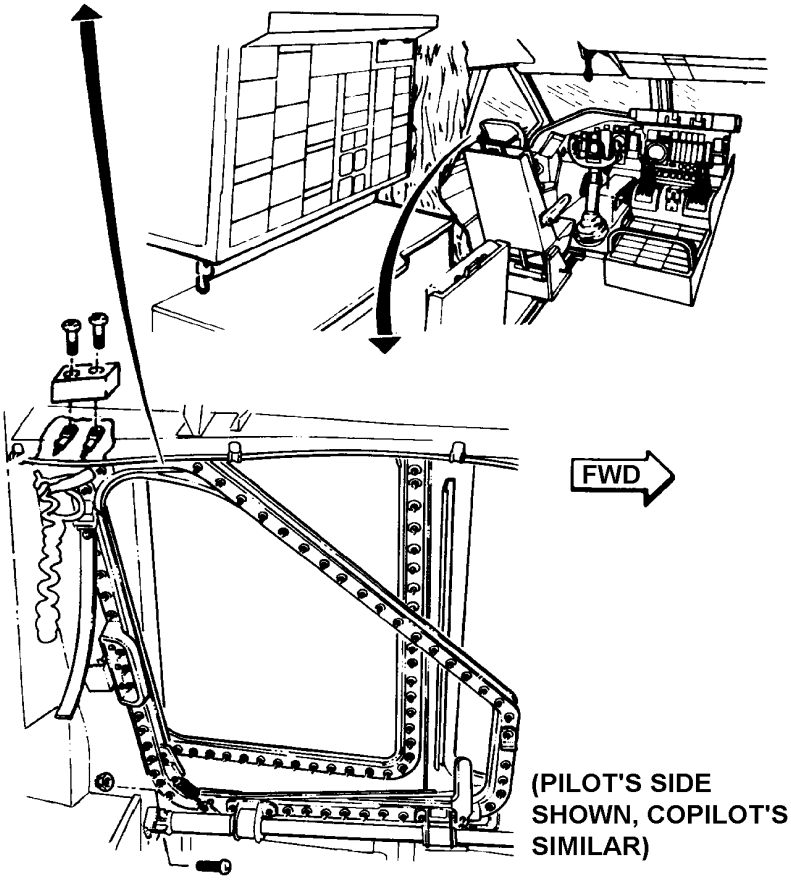

(PILOT'S SIDE SHOWN, COPILOT'S SIMILAR)

Pilot's Clear Vision Windshield

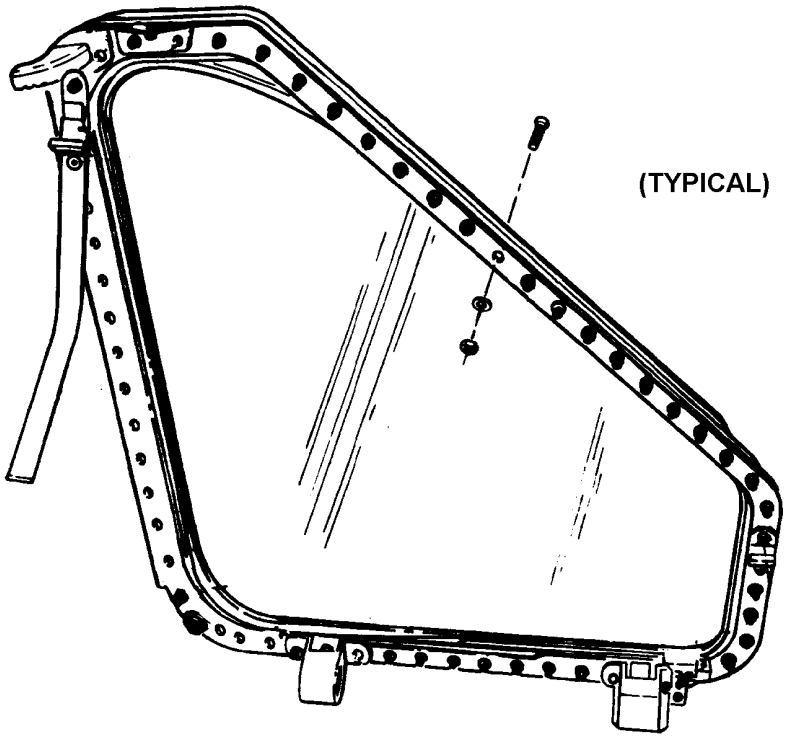

(PILOT'S SIDE SHOWN,
COPILOT'S SIMILAR)

Pilot's Clear Vision Windshield and Related Hardware

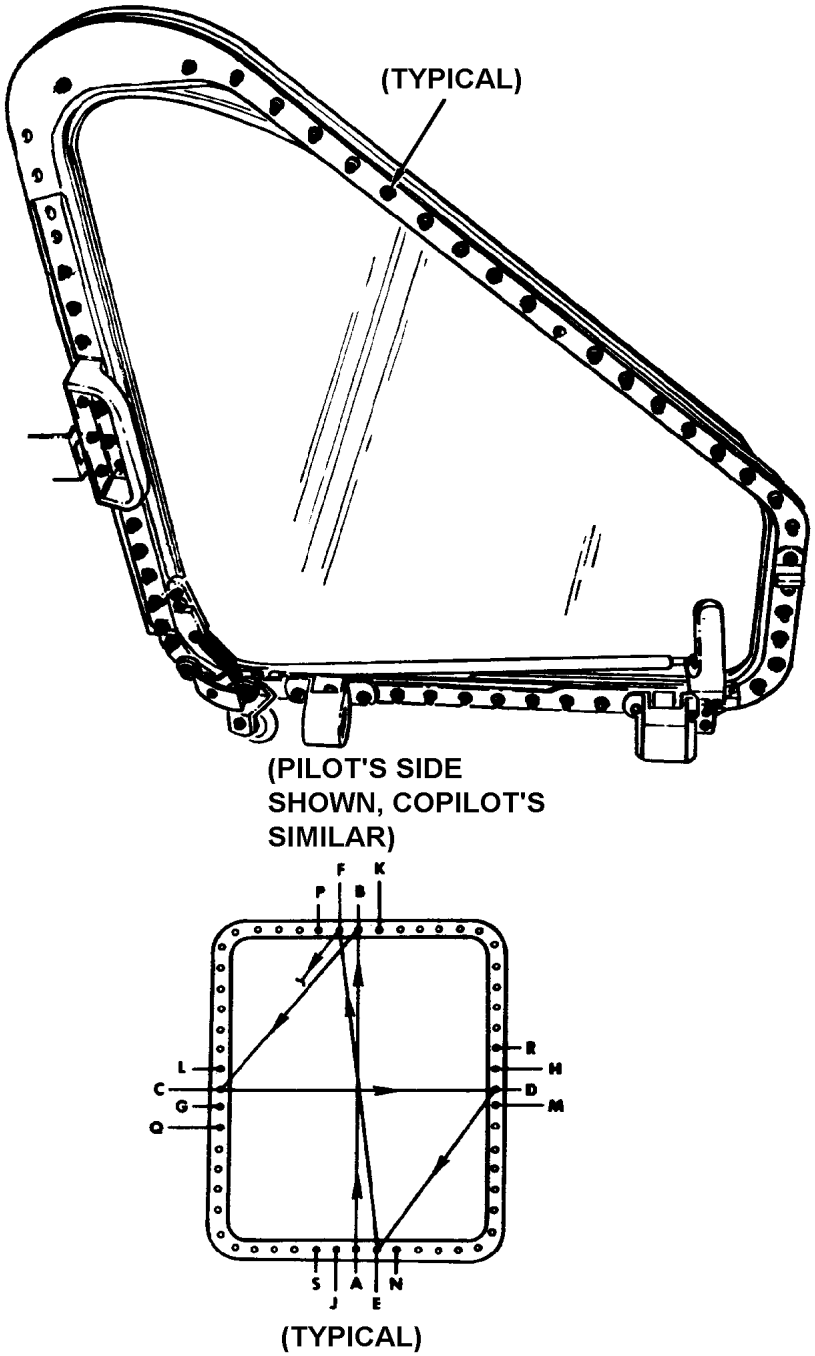

Pilot's Clear Vision Windshield Torque Pattern Illustration

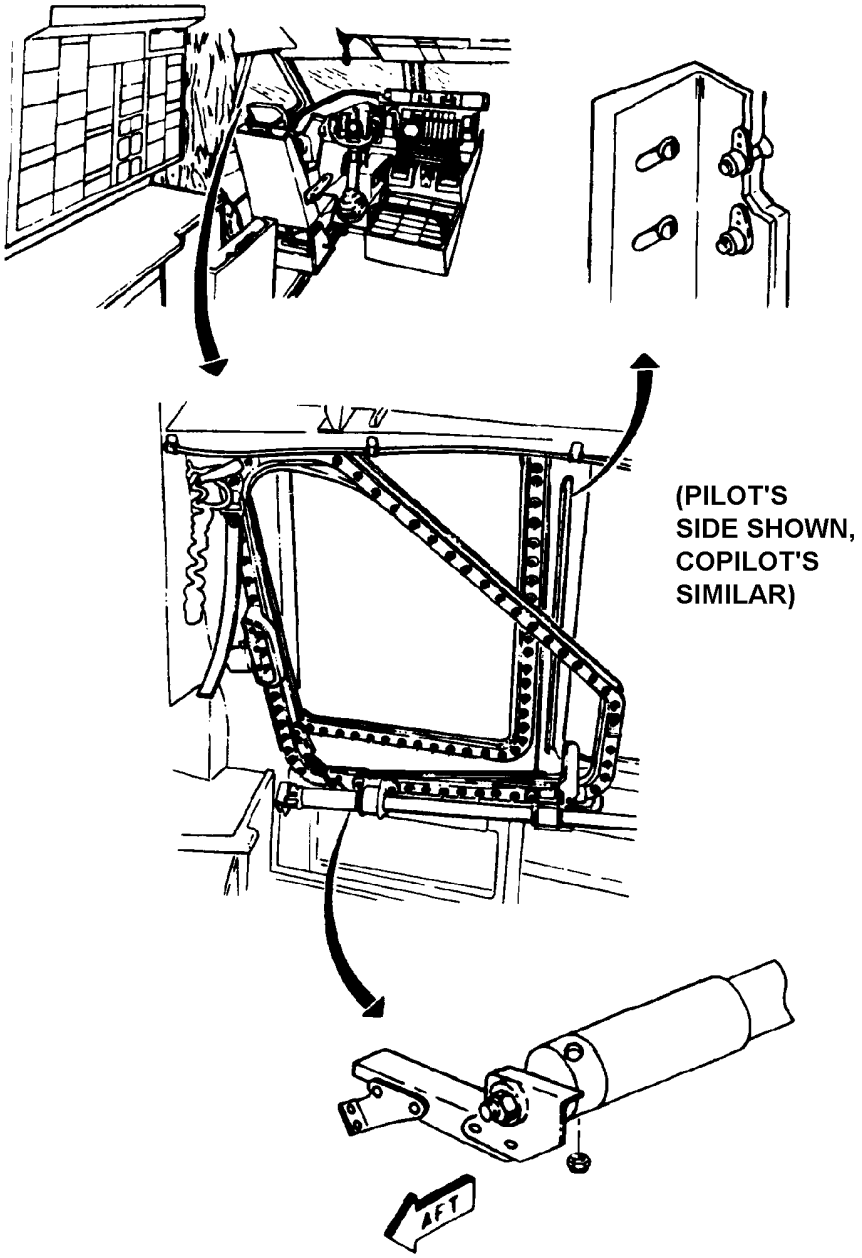

Pilot's Clear Vision Windshield Components (Sheet 1 of 2)

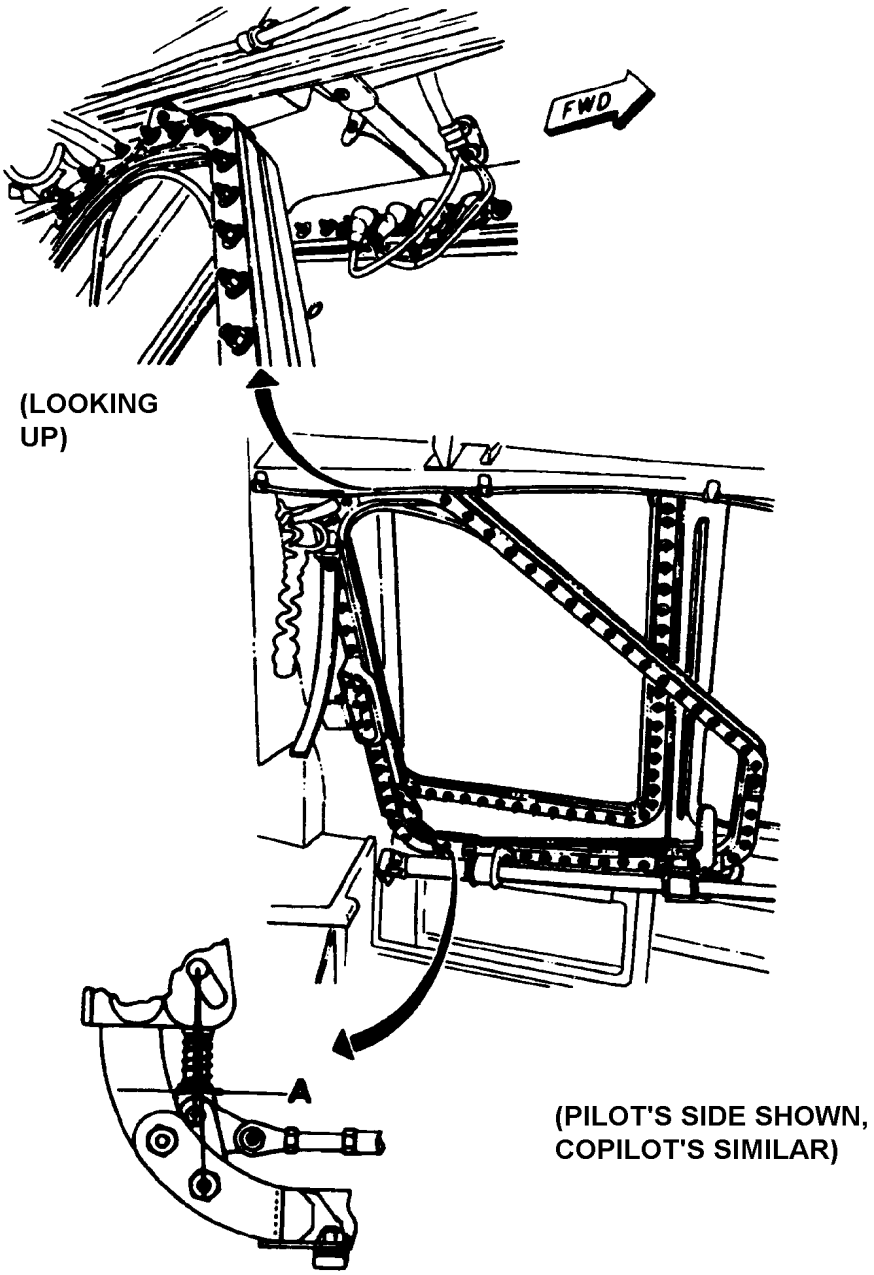

Pilot's Clear Vision Windshield Components (Sheet 2 of 2)

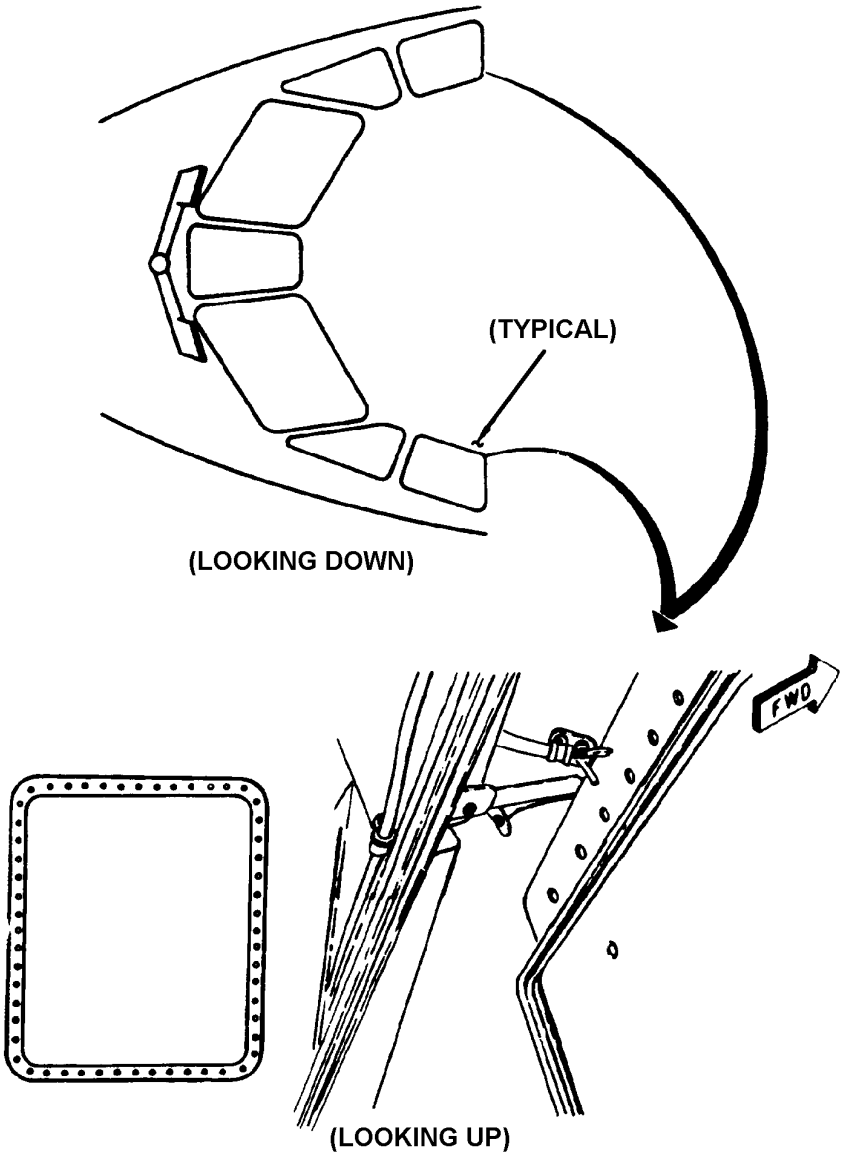

Pilot's and Copilot's Side Windshields

NOTES

STANDARD PRACTICES (ENGINE)

Refer to T.O. 1C-141B-2-70JG-00-1 (Power Plant Limits and Operating Checklist) for an explanation of the following standard engine practices:

I. Power Plant Limits

a. Static/dynamic leak rate data for power plant components

b. Engine overspeed limits

c. Engine overtemperature limits

d. Engine operating limits

II. Power Plant Operation

a. Starting and shutting down engines

b. Emergency procedures

c. Motoring engine

III. Power Plant Miscellaneous Data

a. Exhaust gas temperature (EGT) spread check limits

b. Bleed control operating limits

c. Idle revolutions per minute (RPM) data

d. RPM conversion data

e. Part power engine pressure ratio (EPR) setting

f. Maximum allowable setting chart, takeoff rated thrust (TRT)

g. Reverser thrust limiter setting chart

h. Temperature conversion chart

Refer to T.O. 1C-141B-2-70JG-00-2 (Power Plant General Maintenance) for an explanation of the following engine general maintenance practices:

I. Power Plant General Maintenance Information

a. Special tools and test equipment

b. Locally manufactured tools and test equipment

c. Torque data

d. Fan blade repair limits

e. Primary exhaust nozzle allowable damage

II. Power Plant General Maintenance Procedures

a. Preparation for air shipment

b. Engine windmilling

c. Engine immobilization

d. Depreserving engine fuel system

e. Engine oil consumption run

f. Leak check of accessory overboard drain

g. Removal and installation of engine instruments

h. Removal and installation of engine mount bolts using mount bolt kit

i. Torquing of V-band couplings

j. Removal and installation of typical pulley guard arrangements

POWER PLANT (GENERAL)

General Description

The airplane is equipped with four axial flow TF33-P-7 flat rated forward turbofan engines. The engines are enclosed in nacelles and are mounted to pylons which are attached to the lower surface of the wings. The complete engine consists of the engine and installed accessories, nose dome, nose cowl, bifurcated duct, cowling, engine mounts, tail pipe, and hot end assembly. Each engine has a 16-stage split/dual compressor, an 8-can annular combustion section, and a 4-stage axial flow, twin spool/dual-type turbine. Each engine also has two accessory gearboxes. One is mounted on the bottom of the engine and the other on the front of the N1 compressor front hub. Each engine is rated at 21,000 pounds of thrust at 0.605 specific fuel consumption (SFC) . This means for each pound of thrust the engine develops, it consumes 0.605 pounds of fuel per hour. The maximum diameter of the engine is 5 feet, 6 inches. The overall length is 19 feet, 11 inches and the total weight is 6,700 pounds. Each engine includes its own cowling, fuel system, ignition system, air system, controls system, instrument system, exhaust system, oil system, and starting system.

General Engine

The engine consists of the compressor, diffuser, combustion chamber, turbine, and accessory operating sections. The compressor section consists of the low pressure (N1) and high pressure (N2) compressors. The N1 compressor is a two-stage large diameter fan, plus seven additional stages and is driven by the second, third, and fourth stages of the turbine. The N2 compressor has seven stages and is driven by the first stage of the turbine. The airflow through the engine divides after the second compressor stage into primary and secondary airflow. The primary airflow continues through the engine. The secondary airflow is diverted into the bifurcated duct which directs the flow aft to be expelled through the fan nozzle. A fan duct seal system pressurizes the seals at the forward and aft end of each aft cowl door preventing fan air leakage. The engine nacelle consists of the engine and installed components, nose dome, nose cowl, forward cowl doors, bifurcated duct, aft cowl doors, and hot end assembly. Access doors are provided in the forward cowl doors for engine and constant speed drive (CSD) oil tank servicing. The aft cowling contains access doors and three blowout doors. Auxiliary air doors are installed around the nose cowl to provide an additional source of air for ground operation and high power settings at slow airspeeds. These doors are spring-loaded closed and are opened by differential pressure between the inlet duct and outside air. A thrust reverser with target-type doors is installed in the hot end assembly.

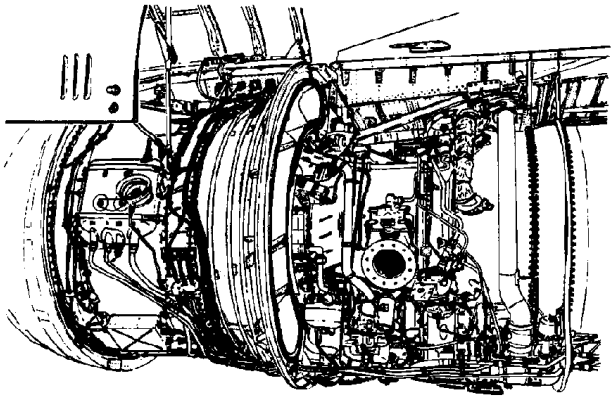

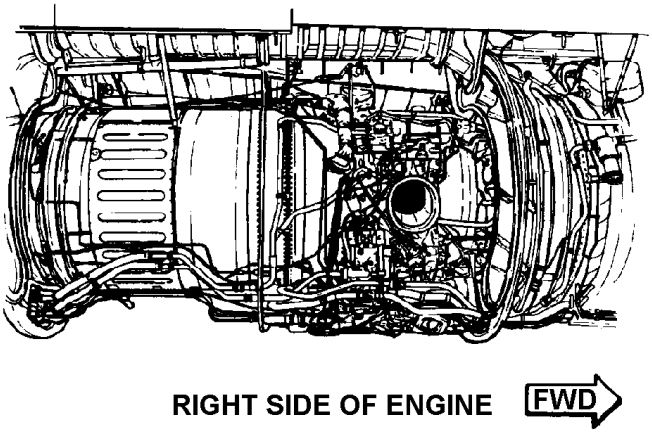

Left and Right Side of Engine

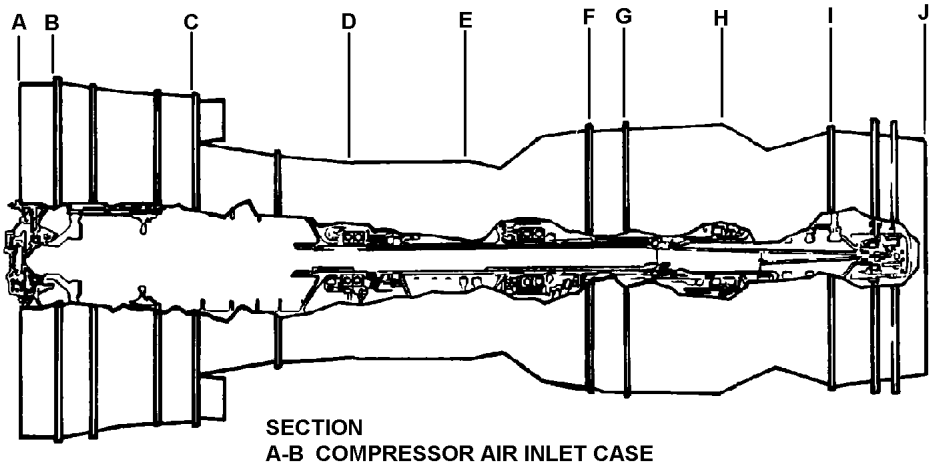

SECTION
A-B COMPRESSOR AIR INLET CASE
B-C FRONT COMPRESSOR FRONT CASE
C-D FRONT COMPRESSOR REAR CASE
D-E INTERMEDIATE CASE
E-F DIFFUSER CASE
F-G FRONT OUTER COMBUSTION CHAMBER CASE
G-H REAR OUTER COMBUSTION CHAMBER CASE
H-I TURBINE NOZZLE CASE
I-J TURBINE EXHAUST CASE

ENGINE SECTIONS

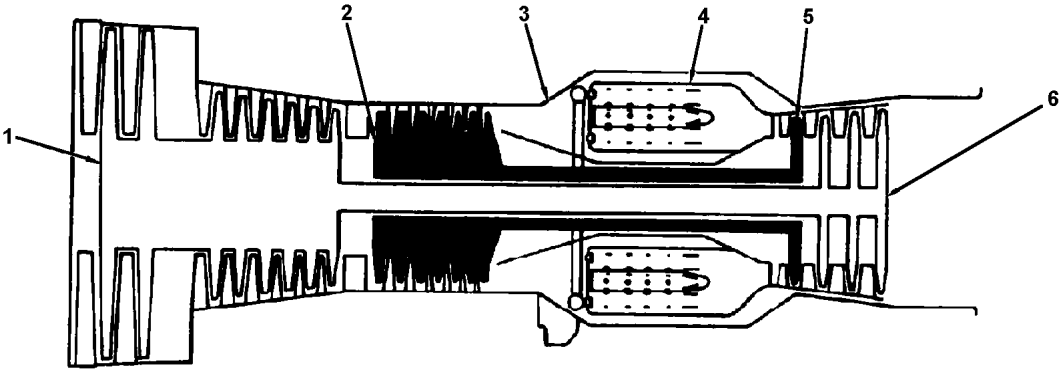

1. N1 COMPRESSOR
2. N2 COMPRESSOR
3. DIFFUSER
4. COMBUSTION CHAMBER
5. N2 TURBINE
6. N1 TURBINE

ENGINE INTERNAL SCHEMATIC DIAGRAM

Engine Sections and Internal Schematic Diagram

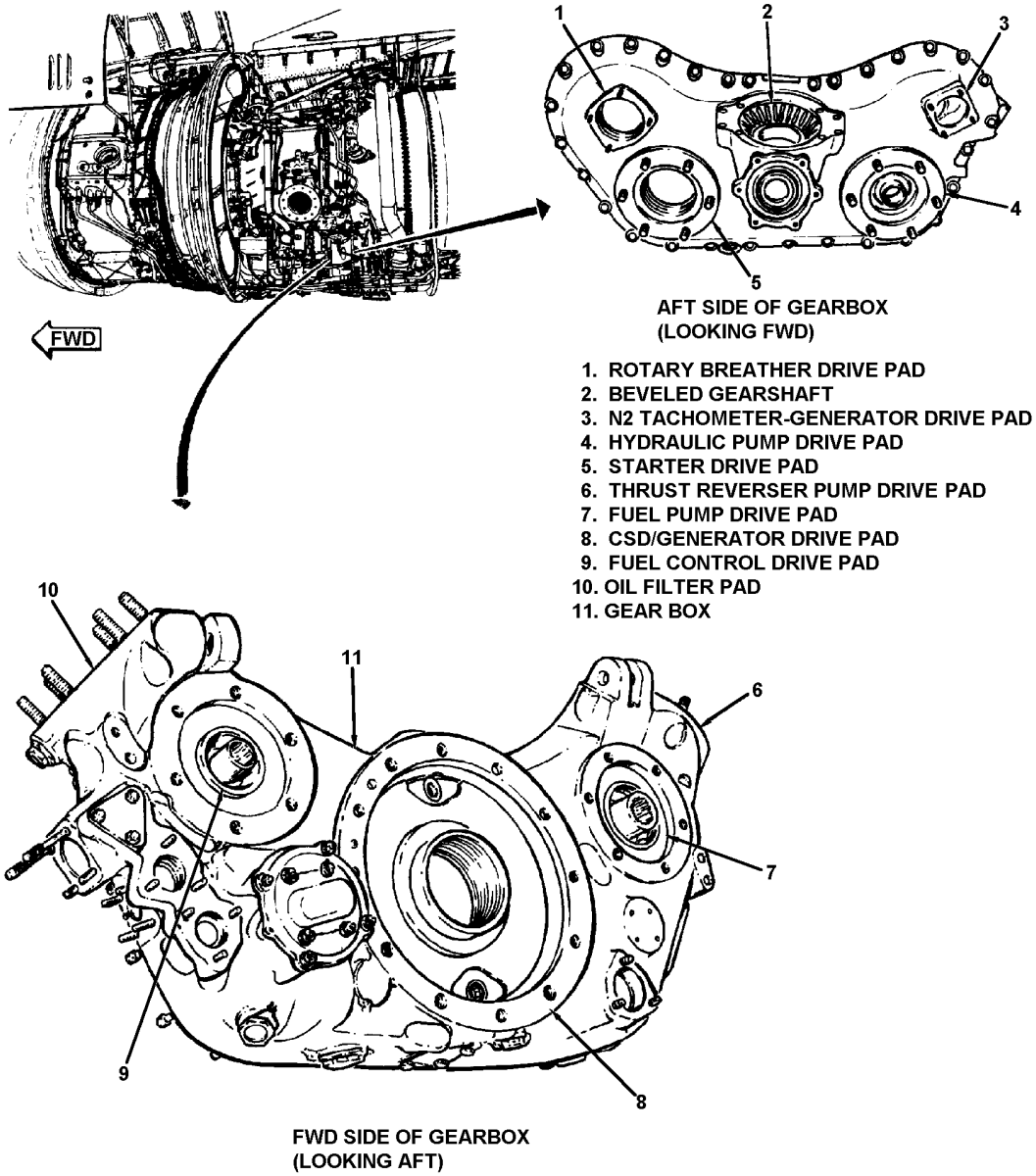

Main Accessory Gearbox

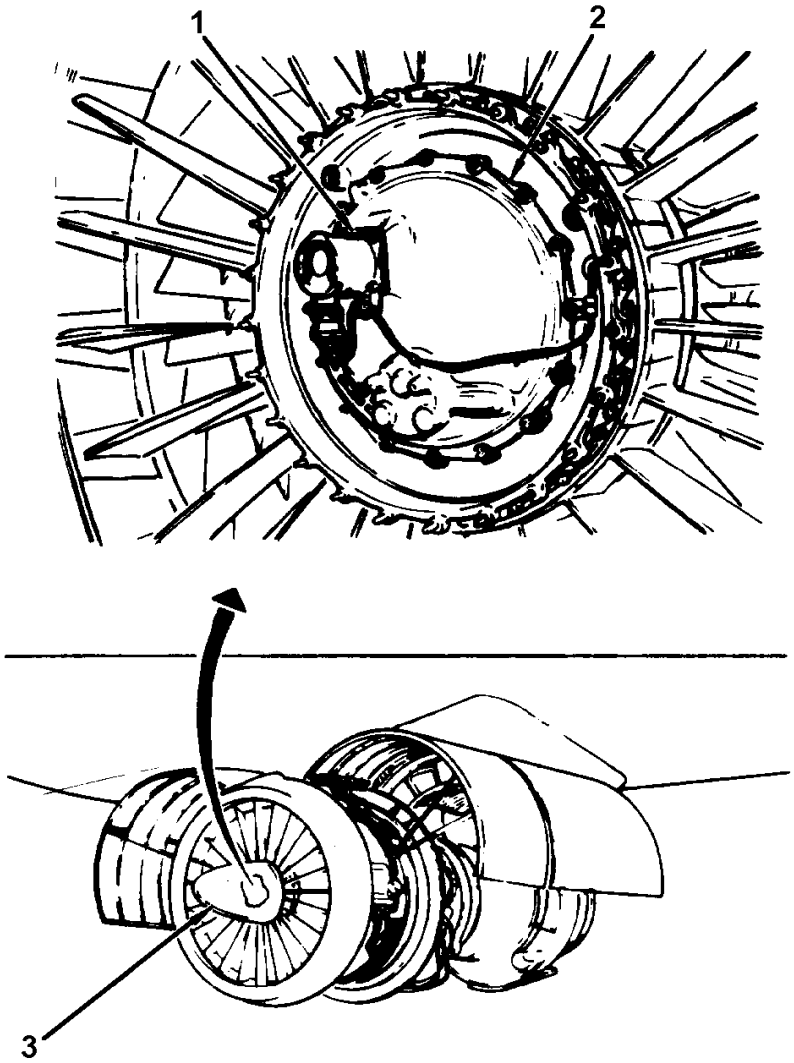

1. N1 TACHOMETER-GENERATOR DRIVE PAD
2. FRONT ACCESSORY GEARBOX
3. NOSE DOME

Front Accessory Gearbox

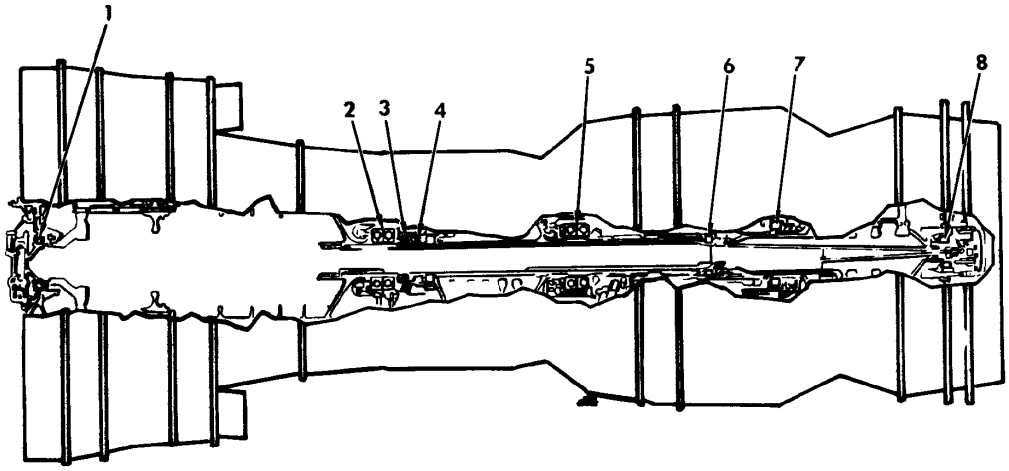

1. NO. 1 BEARING
2. NO. 2 BEARING
3. NO. 2 1/2 BEARING
4. NO. 3 BEARING
5. NO. 4 BEARING
6. NO. 4 1/2 BEARING
7. NO. 5 BEARING
8. NO. 6 BEARING

Engine Bearings

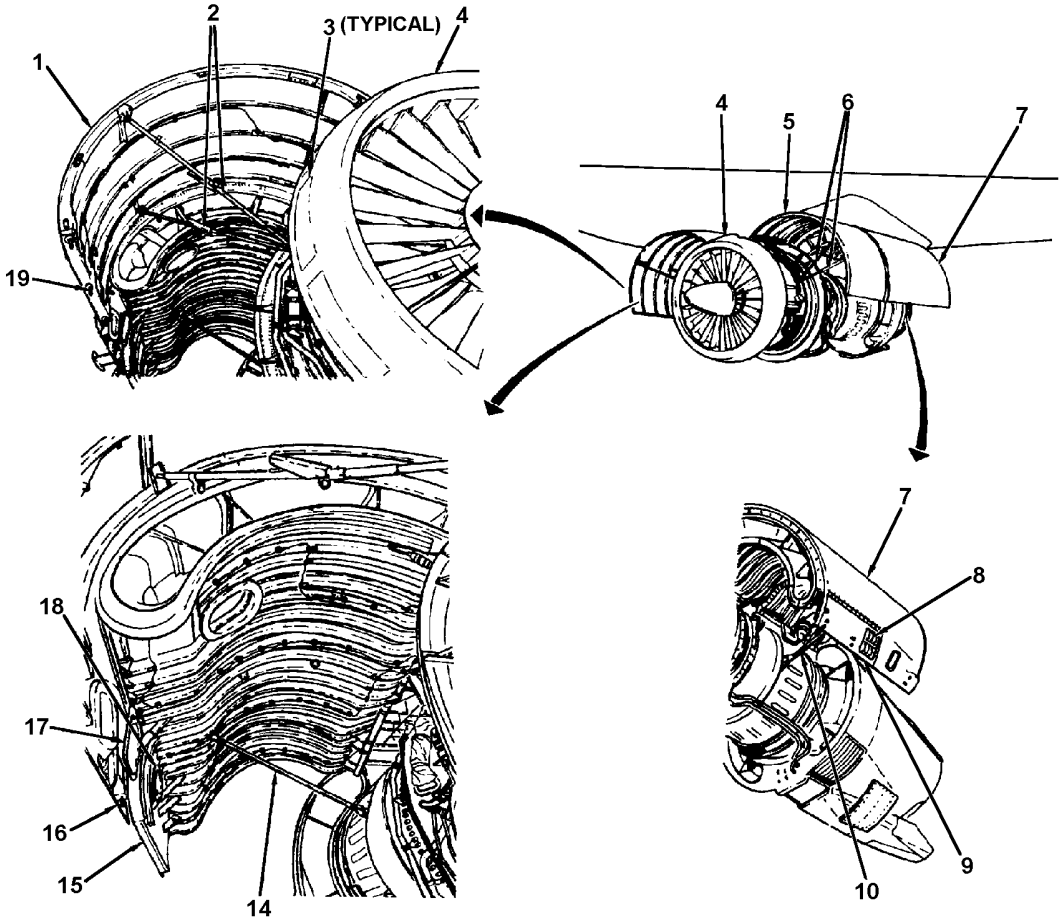

1. RIGHT FORWARD COWL DOOR
2. RIGHT FORWARD SUPPORT ROD ASSEMBLY
3. DOOR ASSEMBLY
4. NOSE COWL
5. LEFT FORWARD COWL DOOR
6. LEFT FORWARD SUPPORT ROD ASSEMBLY
7. LEFT AFT COWL DOOR
8. LEFT AFT COWL BLOWOUT DOOR
9. LEFT ACCESSORY ACCESS DOOR
10. LEFT AFT HOLD OPEN ROD
11. BIFURCATED DUCT
12. LATCH ASSEMBLY
13. LATCH INDICATOR
14. RIGHT AFT HOLD OPEN ROD
15. RIGHT AFT COWL DOOR
16. RIGHT ACCESSORY ACCESS DOOR
17. RIGHT AFT BLOWOUT DOOR
18. RIGHT FORWARD BLOWOUT DOOR
19. LATCH EYEBOLT ASSEMBLY

(TYPICAL BOTH SIDES)

FWD

Engine Cowling

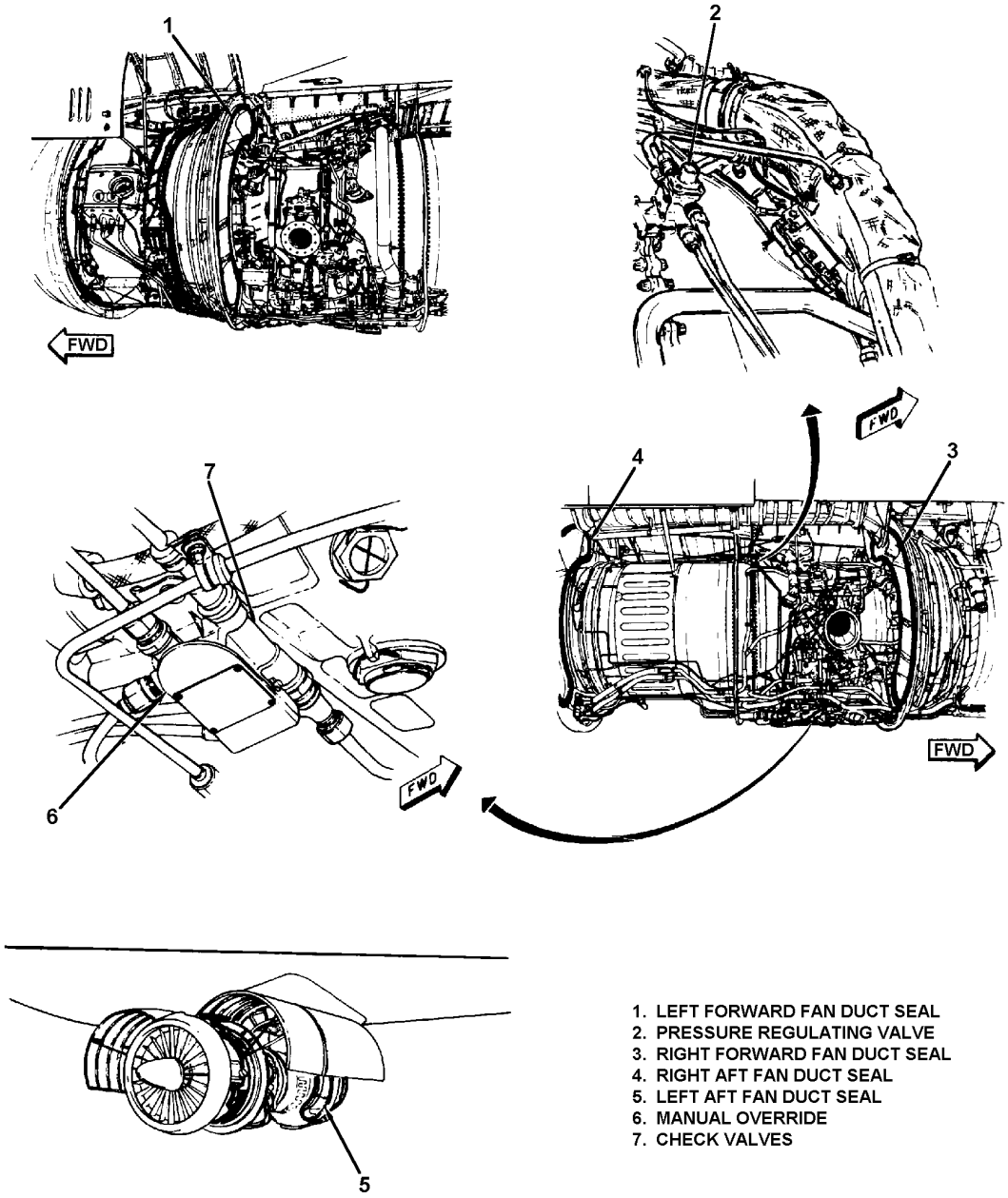

1. LEFT FORWARD FAN DUCT SEAL
2. PRESSURE REGULATING VALVE
3. RIGHT FORWARD FAN DUCT SEAL
4. RIGHT AFT FAN DUCT SEAL
5. LEFT AFT FAN DUCT SEAL
6. MANUAL OVERRIDE
7. CHECK VALVES

Fan Duct Seals System Components

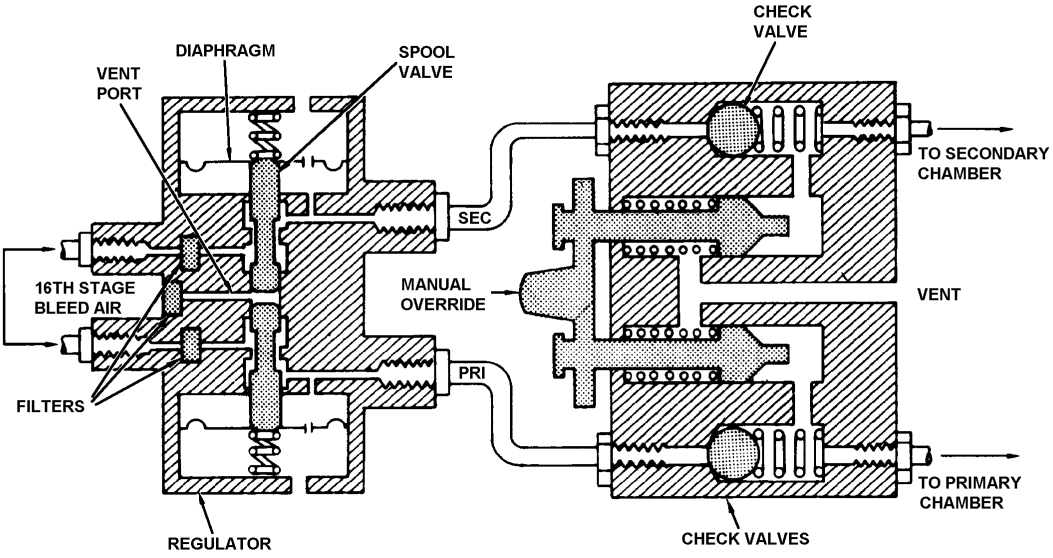

Fan Duct Seals System Schematic Diagram

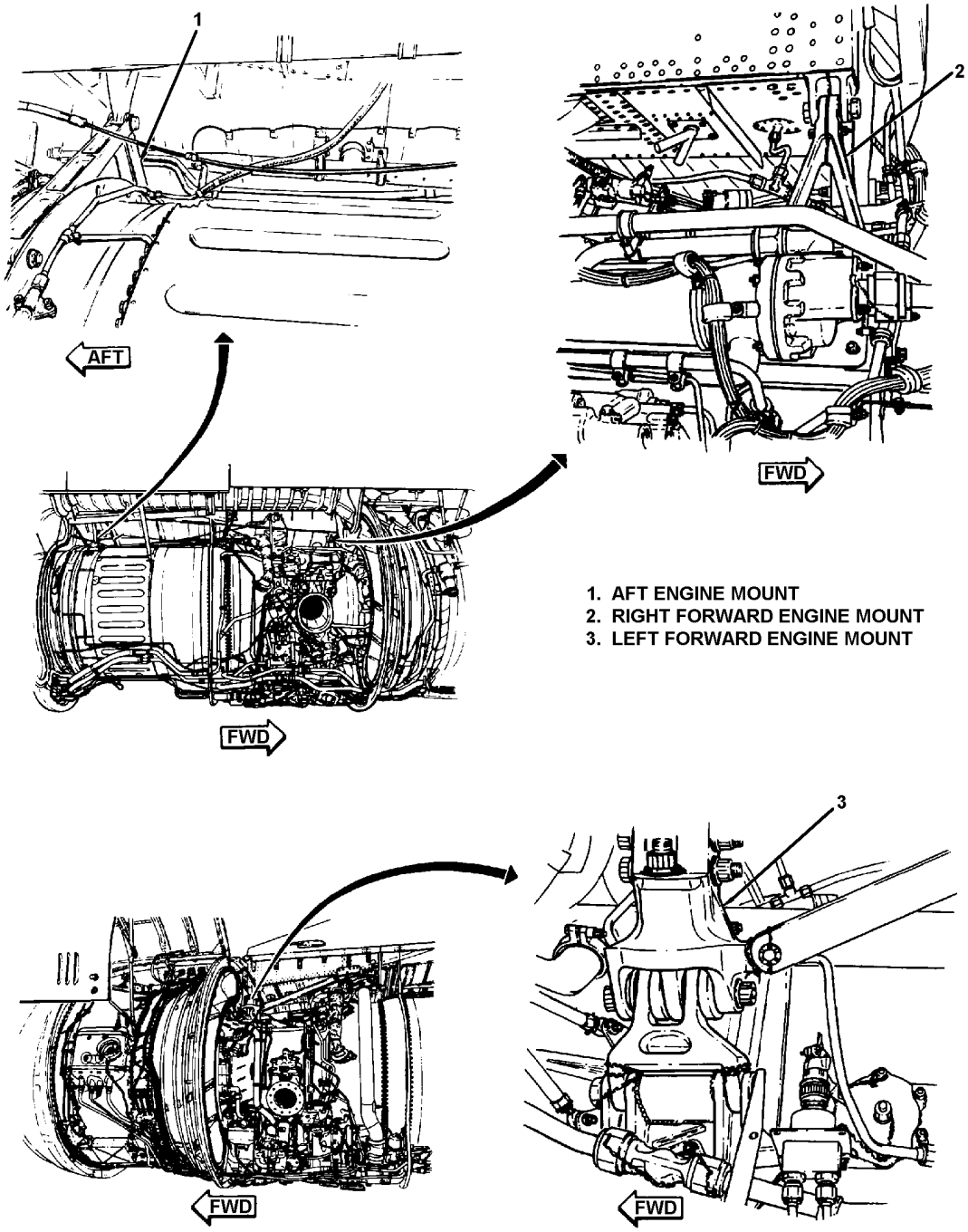

Engine Mounts

ENGINE FUEL AND IGNITION SYSTEMS

Engine Fuel System General Description

The engine fuel system provides clean, vapor-free fuel to the fuel nozzles. Pressures and flow rates are controlled to develop the correct engine power at all operating conditions. The fuel system controls and indicator lights are mounted on two panels: the pilot's overhead start panel, and the flight engineer's fuel management panel. The fuel supply may be shut off at the fuel control with the FUEL AND START IGNITION switch. Heat may be applied to the fuel during icing conditions using the FUEL HEATERS switch. Several lights are used for each engine to indicate the condition of the pump and filter.

Engine Ignition System General Description

The engine ignition system provides the ignition necessary to ignite the air-fuel mixture to operate the engine. Voltage generated in the ignition exciter is carried through the high-tension leads to the spark igniters. The ignition system consists of two parts: a 20-joule system used for starting, and a 4-joule continuous ignition system for other engine operating conditions.

Fuel System

The engine fuel system receives pressurized fuel from the fuel tanks. The fuel enters the first stage of the fuel pump. The fuel pump consists of two stages. The first stage uses an impeller-type pump to increase the pressure for the second stage. The second stage increases the pressure to a valve necessary to circulate fuel through the system and into the combustion chamber. External plumbing routes the fuel from the first stage to the second stage. A de-icer heater, de-icer heater filter, and two differential pressure switches are installed between the two pump stages. The de-icer heater consists of a heat exchanger and an actuator. When selected by the flight crew, the actuator is opened, allowing bleed air to heat the fuel circulating through the heater. The de-icer filter removes any contaminants present in the fuel. A fuel pump differential pressure switch is installed between the inlet and outlet of the fuel pump first stage. If differential pressure drops below a set value, a PUMP OUT light will come on. Another pressure switch senses differential pressure across the filter. If differential pressure rises above a set value, a FIL BYPASS light comes on indicating the filter is bypassing fuel.

Fuel re-enters the fuel pump at the second stage. The gear-type pump increases pressure to approximately 1000 psi. Pressurized fuel from the second stage of the fuel pump is delivered to the fuel control. The fuel control meters fuel at pressures and flow rates required to obtain desired engine operation. The fuel control automatically provides a fuel starting schedule to allow the engine to accelerate to a steady idle RPM without exceeding the temperature limits or compressor surge limits. During flight, it maintains a constant turbine inlet temperature for each given throttle setting. It also prevents over temperature and compressor surging during acceleration, and prevents flameout during rapid deceleration. The fuel control is driven by the N2 compressor through an accessory gearbox. An electrically controlled fuel shutoff valve actuator is connected to the fuel control. The actuator opens or closes a valve in the fuel inlet passage. A solenoid-operated fuel enrichment valve is controlled by the flight crew to add extra fuel during starting. The valve is energized depending on the type of fuel used and the ambient temperature. A mechanical power lever connects the fuel control to the throttle linkage. The throttles are the only input required by the flight crew to control fuel flow rates to the combustion section. Metered fuel leaving the fuel control enters the fuel flow transmitter. The transmitter imparts a rotation on the fuel which is sensed by a turbine. The turbine deflects against spring pressure sending an electrical signal to be used for monitoring fuel flow. Fuel leaves the transmitter and enters a fuel-oil cooler.

The fuel-oil cooler is used to decrease the temperature of hot engine oil with the cool fuel. A pressurizing and dump (P & D) valve is used to determine primary and secondary fuel flow requirements. It also drains the primary fuel manifold during engine shutdown. Fuel leaving the P & D valve travels through a fuel manifold, with two concentric tubes, to the fuel nozzles. An inner tube carries secondary fuel and the outer tube carries primary fuel. There are six fuel nozzles in each burner can, for a total of 48 for each engine. The fuel nozzles spray primary and secondary fuel into the combustion chambers. The fuel is burned and expanded across the turbines.

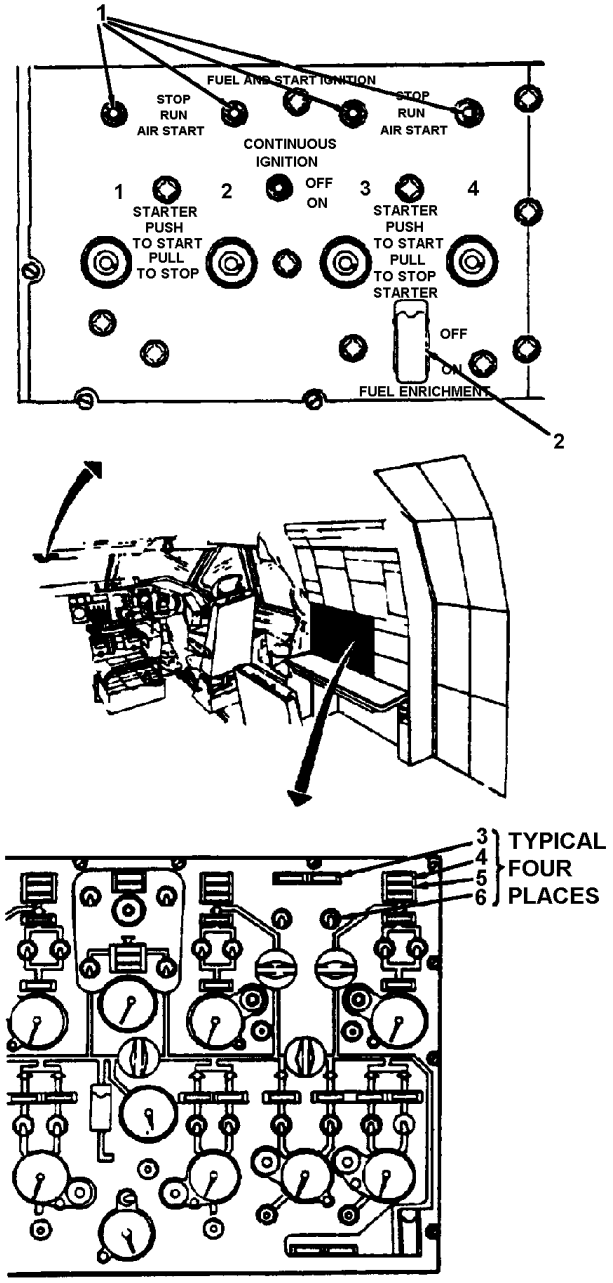

1. ENGINE FUEL AND START IGNITION SWITCHES
2. FUEL ENRICHMENT SWITCH
3. FUEL HEAT ON LIGHT
4. FIL BYPASS LIGHT
5. PUMP OUT LIGHT
6. FUEL HEATERS SWITCHES

Fuel System Controls and Indicators

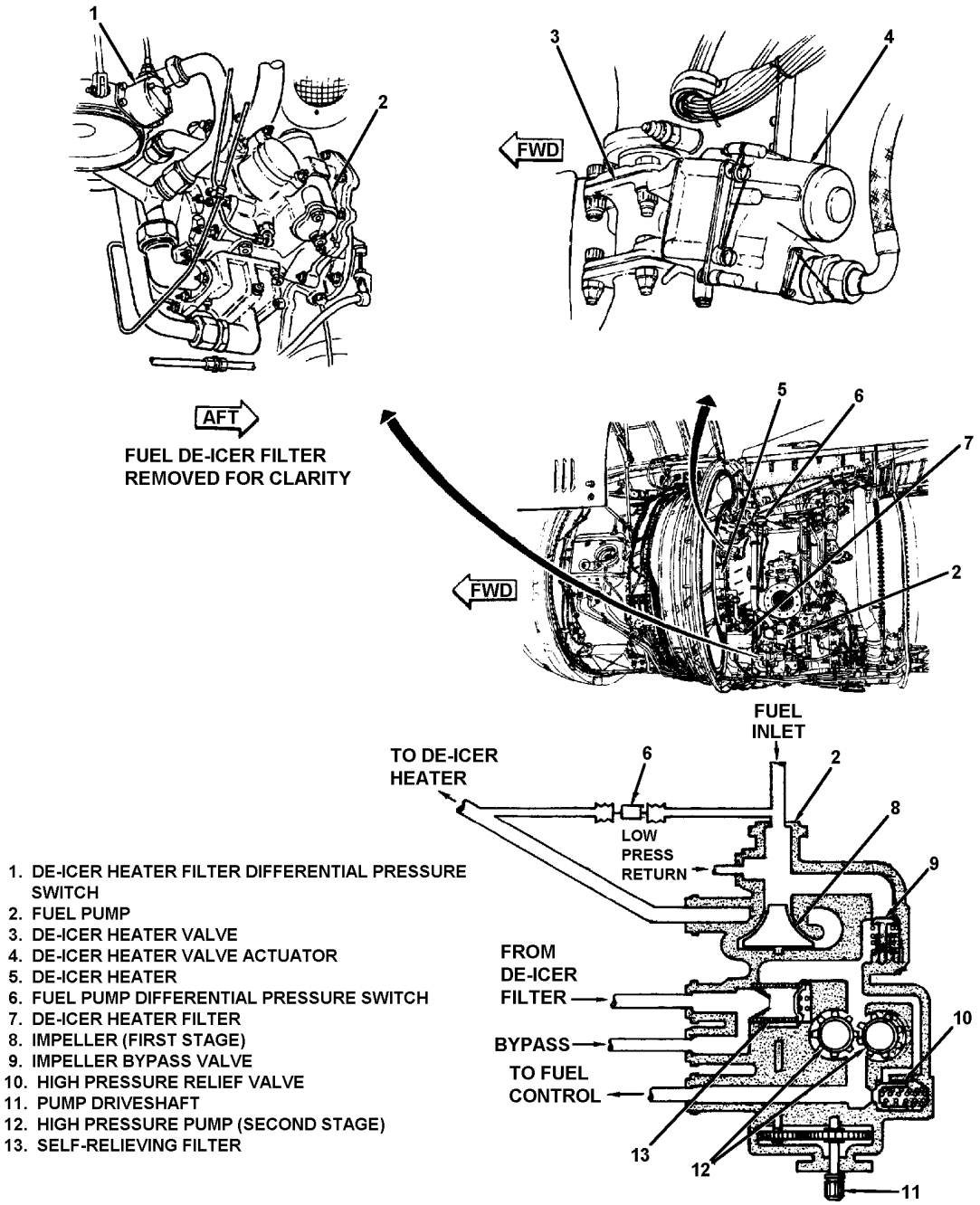

Fuel System Components on Left Side of Engine

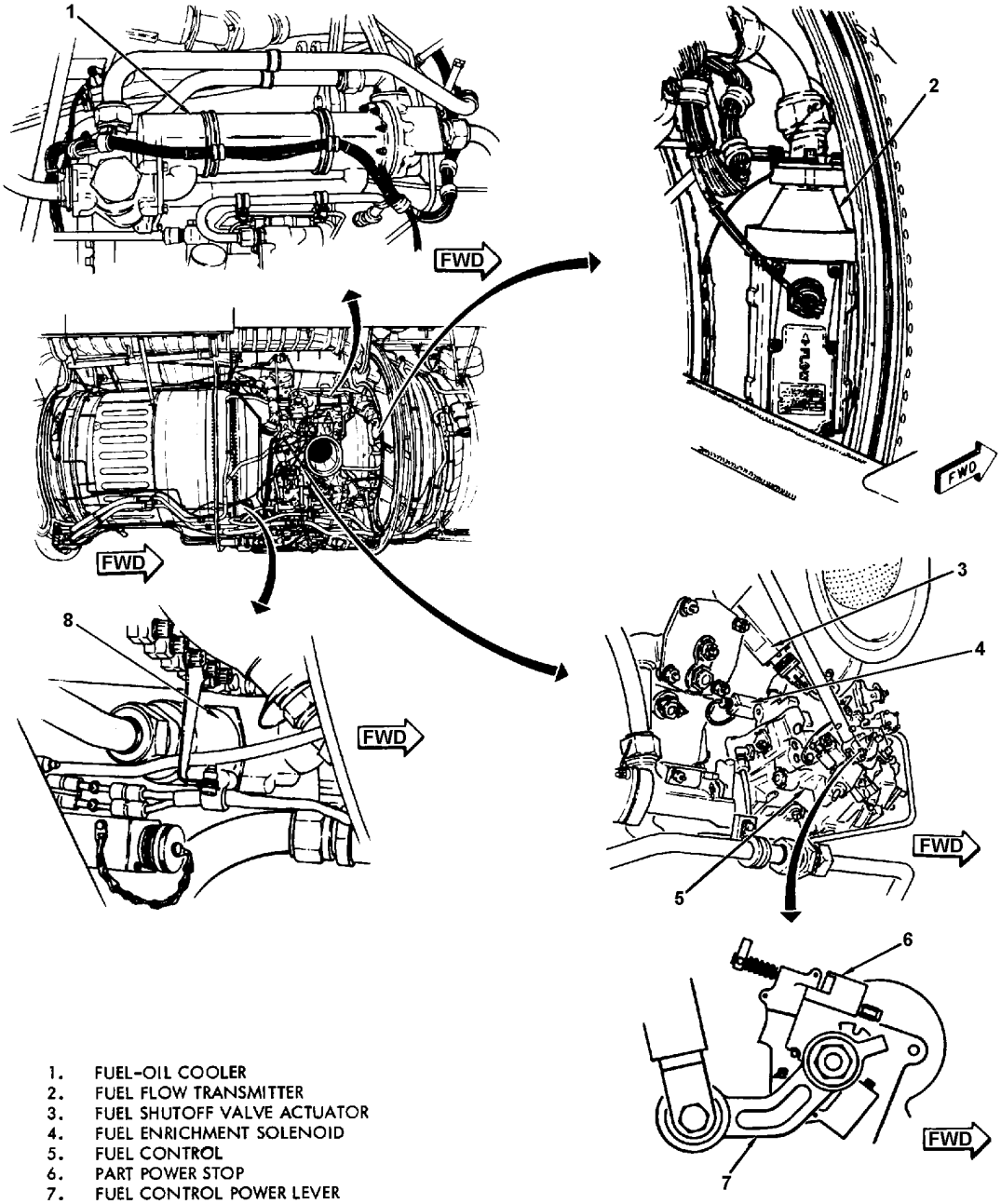

1. FUEL-OIL COOLER
2. FUEL FLOW TRANSMITTER
3. FUEL SHUTOFF VALVE ACTUATOR
4. FUEL ENRICHMENT SOLENOID
5. FUEL CONTROL
6. PART POWER STOP
7. FUEL CONTROL POWER LEVER
8. PRESSURIZING AND DUMP VALVE

Fuel System Components on Right Side of Engine

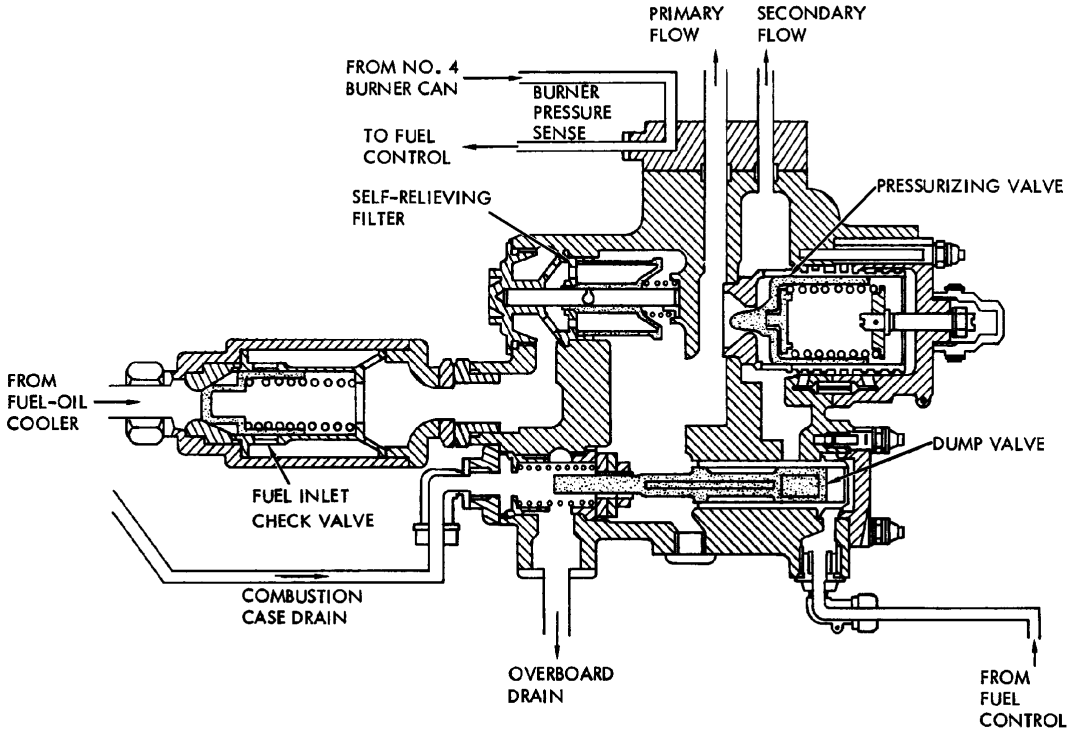

Pressurizing and Dump (P&D) Valve Schematic Diagram

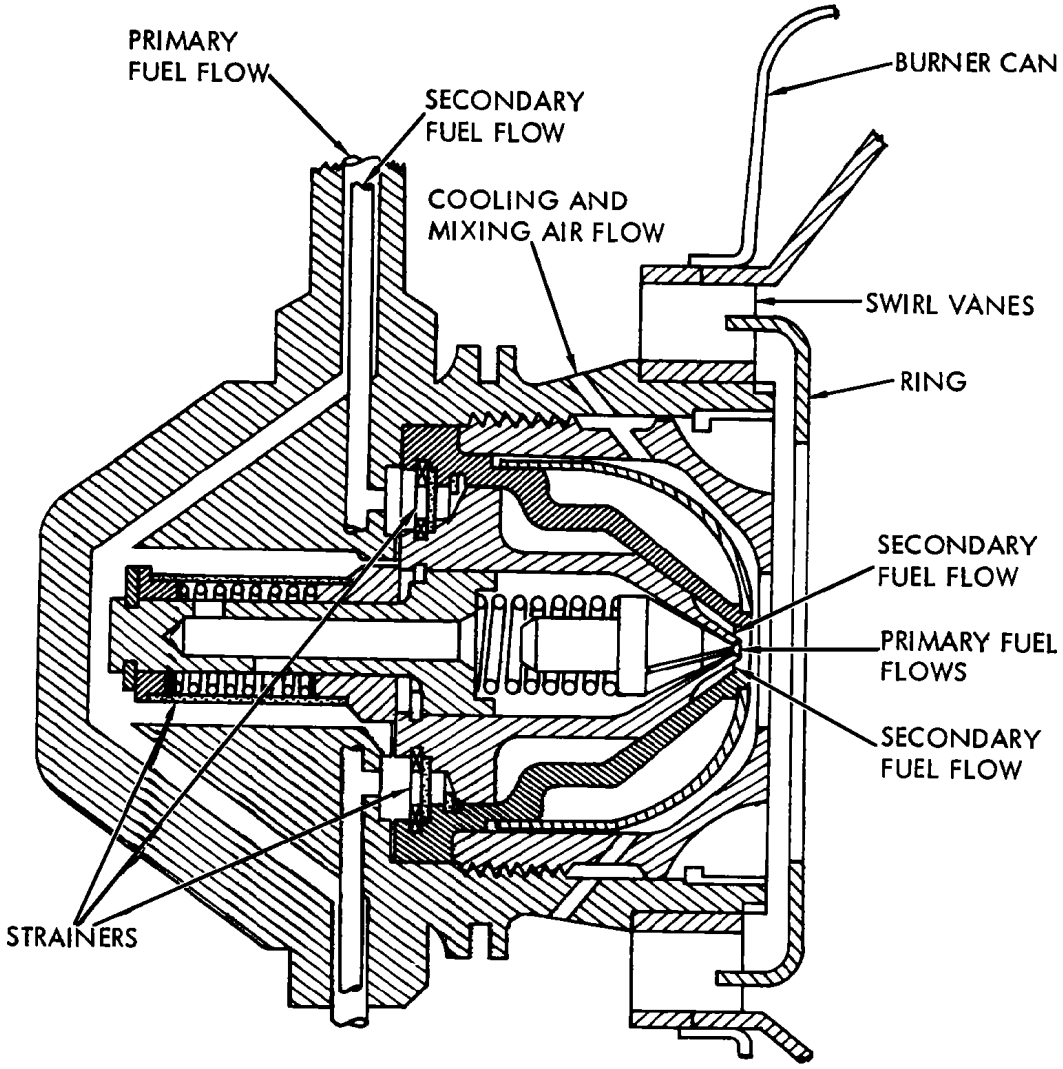

Fuel Nozzle Schematic Diagram

Ignition System

The ignition system ignites the fuel-air mixture in the combustion chambers. A 4-joule and 20-joule system are contained in a single exciter. The 4-joule system is used for continuous ignition. The 20-joule system is intermittent and is used only during engine starts. The exciter receives an AC and DC voltage from the airplane. The voltages are filtered, rectified, and increased before exiting the exciter. High-tension leads carry the voltage to spark igniters located in burner cans No. 4 and No. 5. High voltage from the exciter ionizes a gap at the end of the ignitors creating a spark to ignite the fuel.

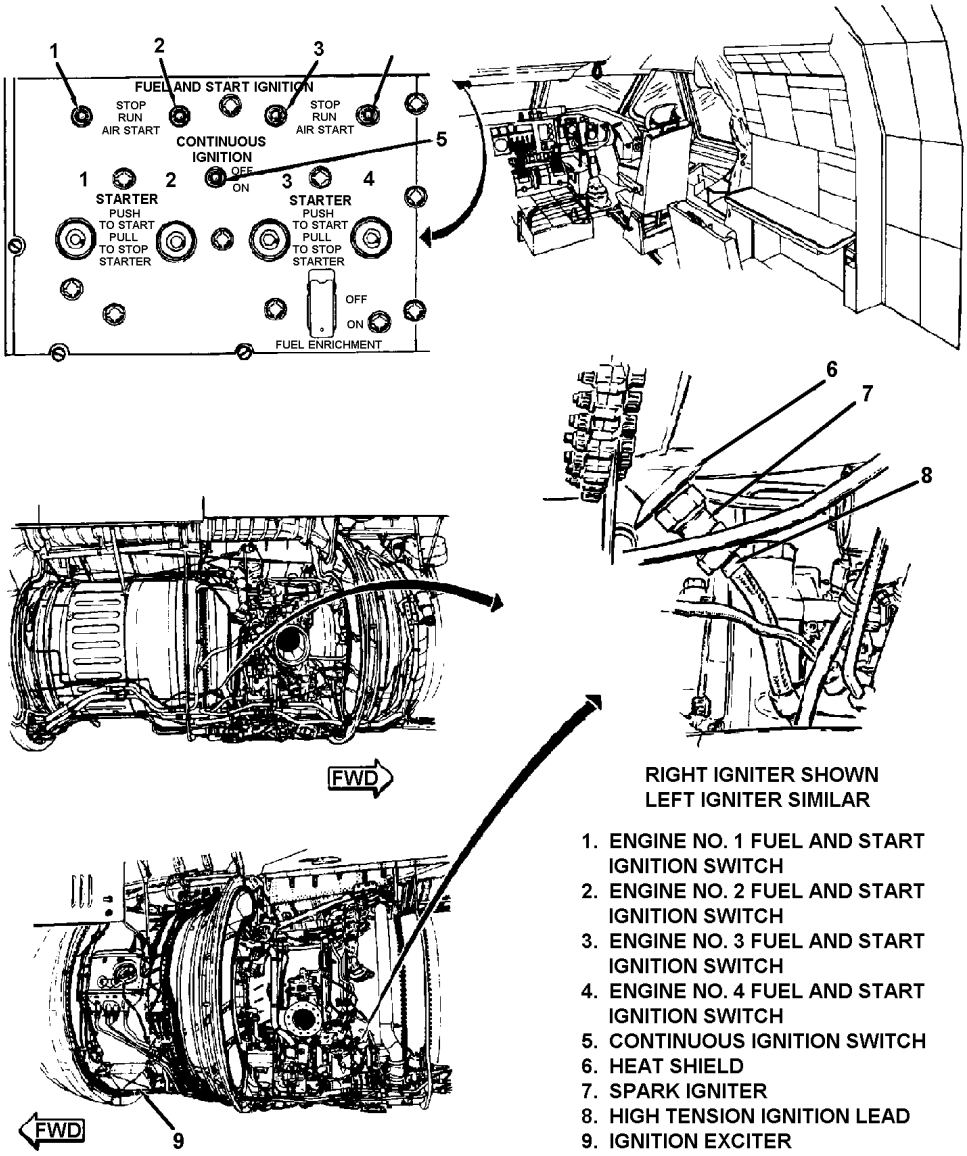

Ignition System Components

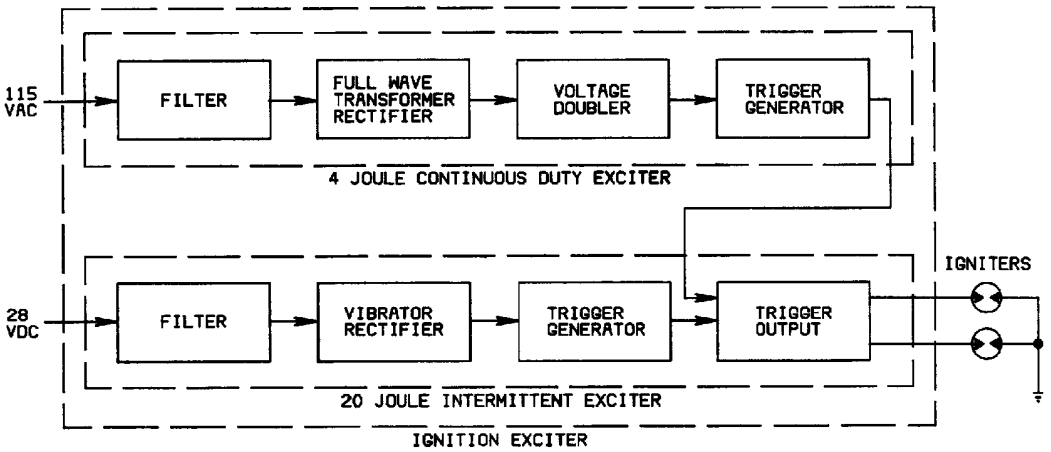

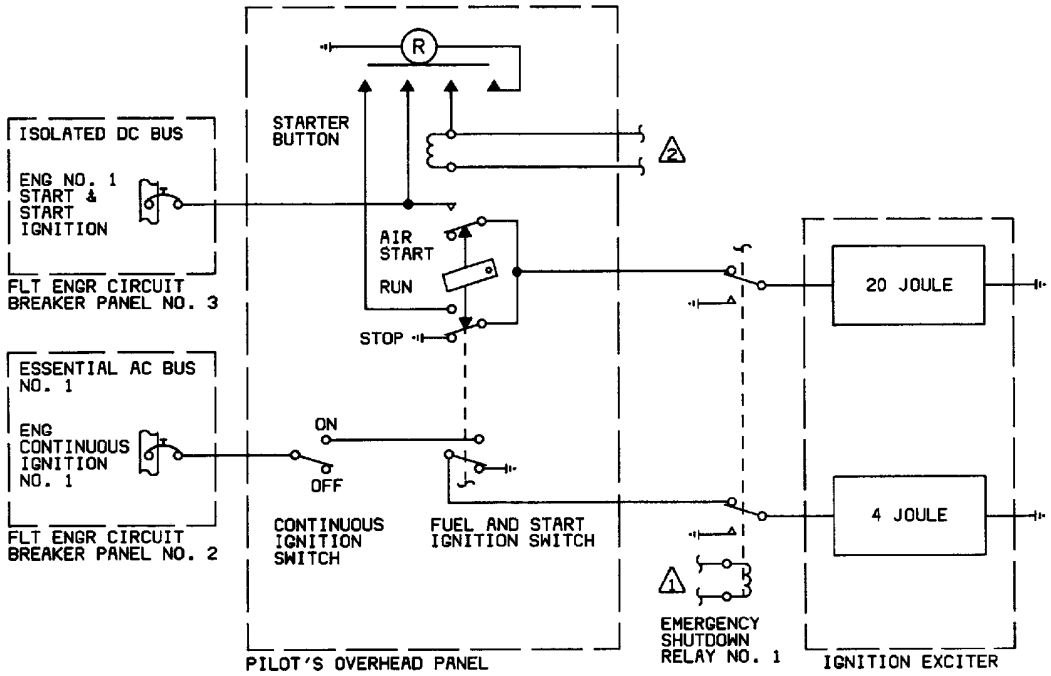

NOTE

1. SEE SECTION 6 FOR CONTROL OF EMERGENCY SHUTDOWN RELAY NO. 1.
2. TO STARTER AND STARTER CONTROL VALVE.
3. ENGINE NO. 1 CIRCUIT SHOWN. OTHER ENGINE CIRCUITS SIMILAR.

Ignition System Schematic Diagram

NOTES

ENGINE AIR SYSTEM

General Description

The engine air system is used to extract compressor air for various functions. The compressor air is used in the airplane pneumatic system, provides engine and nacelle anti-icing, cools engine components, and unloads the compressor. The engine anti-icing system is used to prevent the formation of ice at the engine inlet. The nacelle anti-icing system prevents ice formation on the nose cowl. Bleed air is used in external component cooling. Ejectors help produce a lower pressure at ejector ducts, thus moving outside air through the cowling faster. The compressor, due to certain operating conditions, must frequently be unloaded. To accomplish this, several bleed valves and controls are used. The component cooling and compressor bleed systems operate any time the engine is running. The nacelle and engine anti-icing system are operated simultaneously. The system is controlled manually by a single switch or automatically by an ice detection system. See T.O. lC-141B-2-30GS-00-1 for information about the ice detection system.

System Operation

The air system extracts bleed air for anti-icing, cooling, and the airplane pneumatic system. Bleed air is also dumped overboard during certain engine operating cycles. Bleed air is extracted from each side of the diffuser. Bleed air is classified as inside diameter air and outside diameter air. Inside diameter air has a low velocity and high static pressure. Large particles are separated leaving clean air. Outside diameter air has a high velocity and tends to retain heavier particles. Bleed air is also extracted by separate ducts for engine anti-icing and nacelle anti-icing. Bleed air for engine anti-icing is routed forward to a flow regulator and anti-icing valve. When the valve is opened, air flows into the inlet guide vanes and nose dome. Warm air prevents ice from forming on these areas. Bleed air for nacelle anti-icing is also routed forward through a flow limiter and regulator-shutoff valve. Air is routed to a chamber in the nose cowl and directed to the inlet lip through header tubes. Bleed air for both systems is exhausted into the engine inlet. Both systems are operated at the same time from a single switch on the pilot’s overhead panel. In addition to anti-icing, bleed air is used to aid in component cooling. Outside air enters the nacelle through louvers in the bottom of the aft cowl doors. Air flows up and around engine components and is exhausted overboard through ejector ducts. Bleed air is injected, through nozzles, into the inlet of the ejector duct. A low pressure area is created causing the outside air to rush through the nacelle at a faster rate. A pressure switch and ejector nozzles shutoff valve automatically control the bleed air to the nozzles. Above approximately 19,000 feet, the pressure switch signals the shutoff valve to close. Below 19,000 feet, the pressure switch signals the shutoff valve to open. Compressor stalls are prevented by a compressor unloading system. The system reduces the pressure ratio across the compressor by bleeding 12th stage air overboard. Two bleed valves are mounted on the compressor intermediate case. The left valve is a 4 3/4-inch bleed valve while the right is a 6-inch bleed valve. The 4 3/4-inch bleed valve is normally spring-loaded closed and the 6-inch bleed valve is normally spring-loaded open. A bleed control and bleed reset control are used to signal the bleed valves when to open or close.

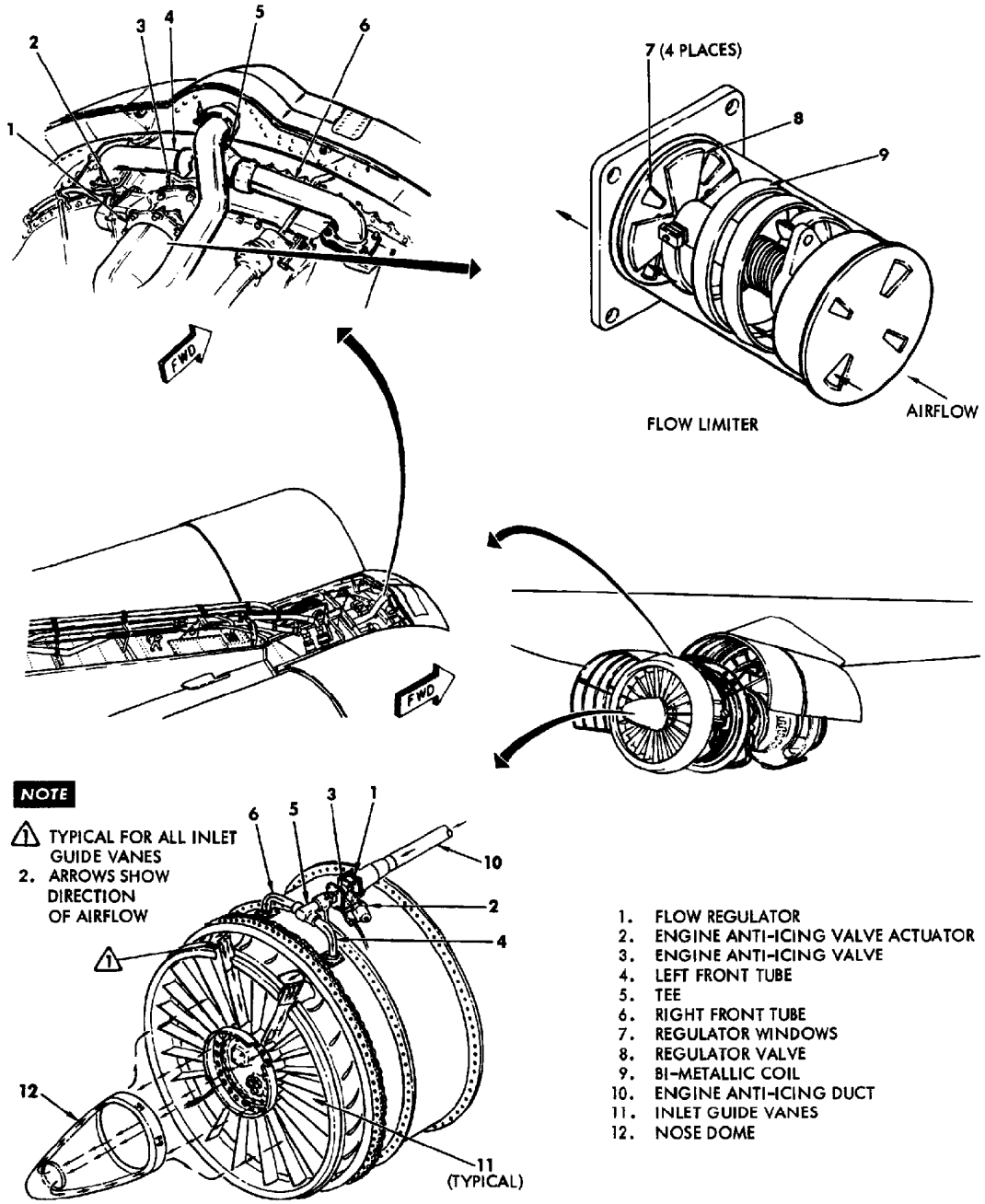

Engine Anti-Icing Components

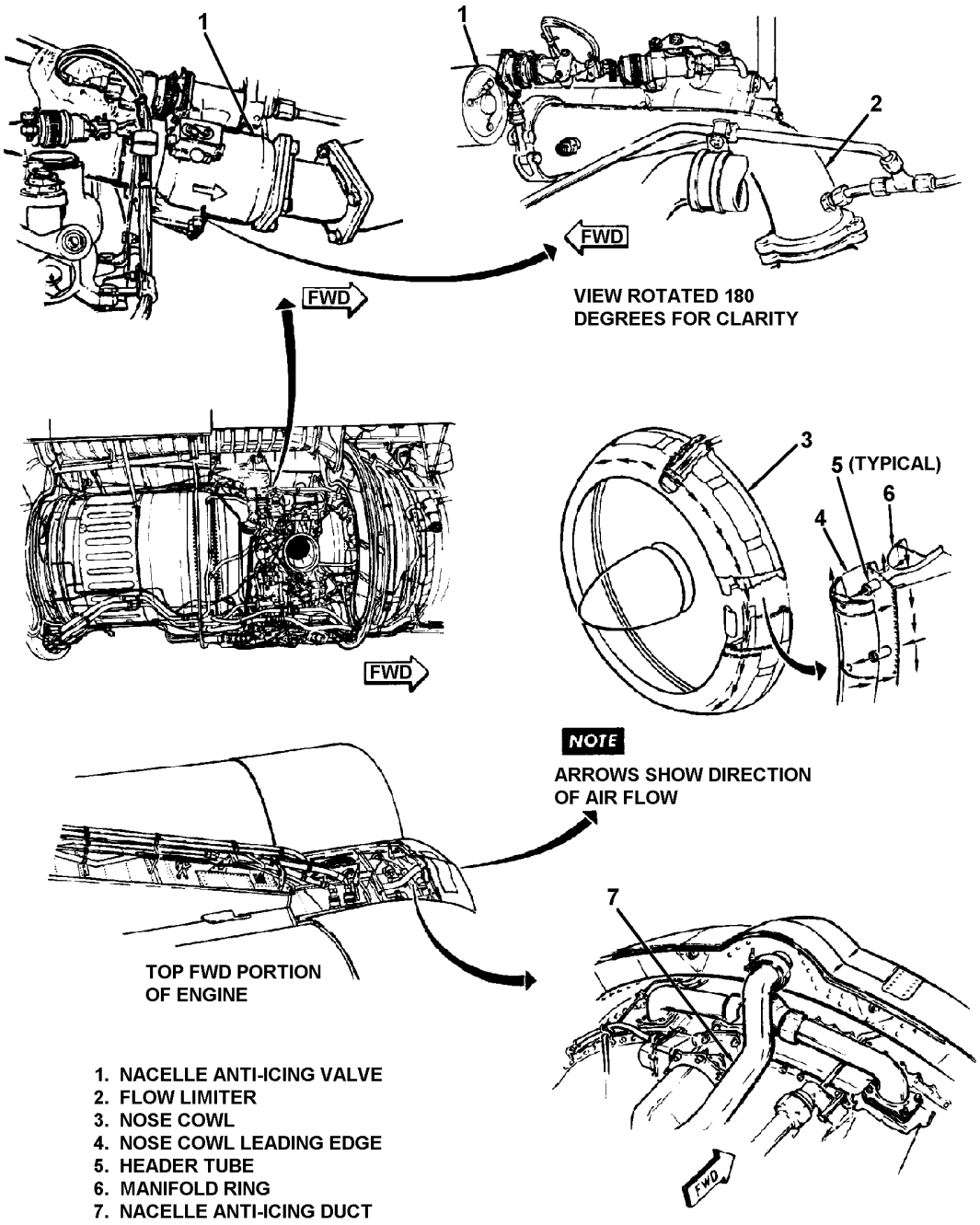

Nacelle Anti-Icing Components

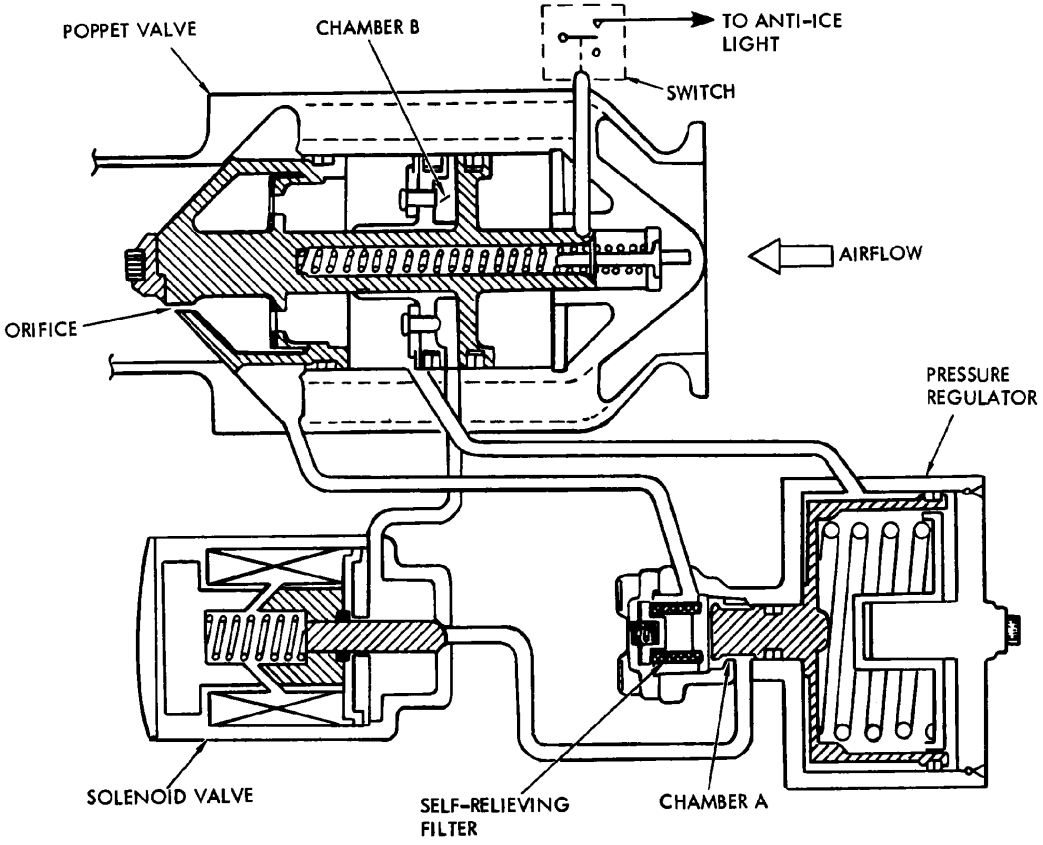

Nacelle Anti-Icing Valve Schematic Diagram

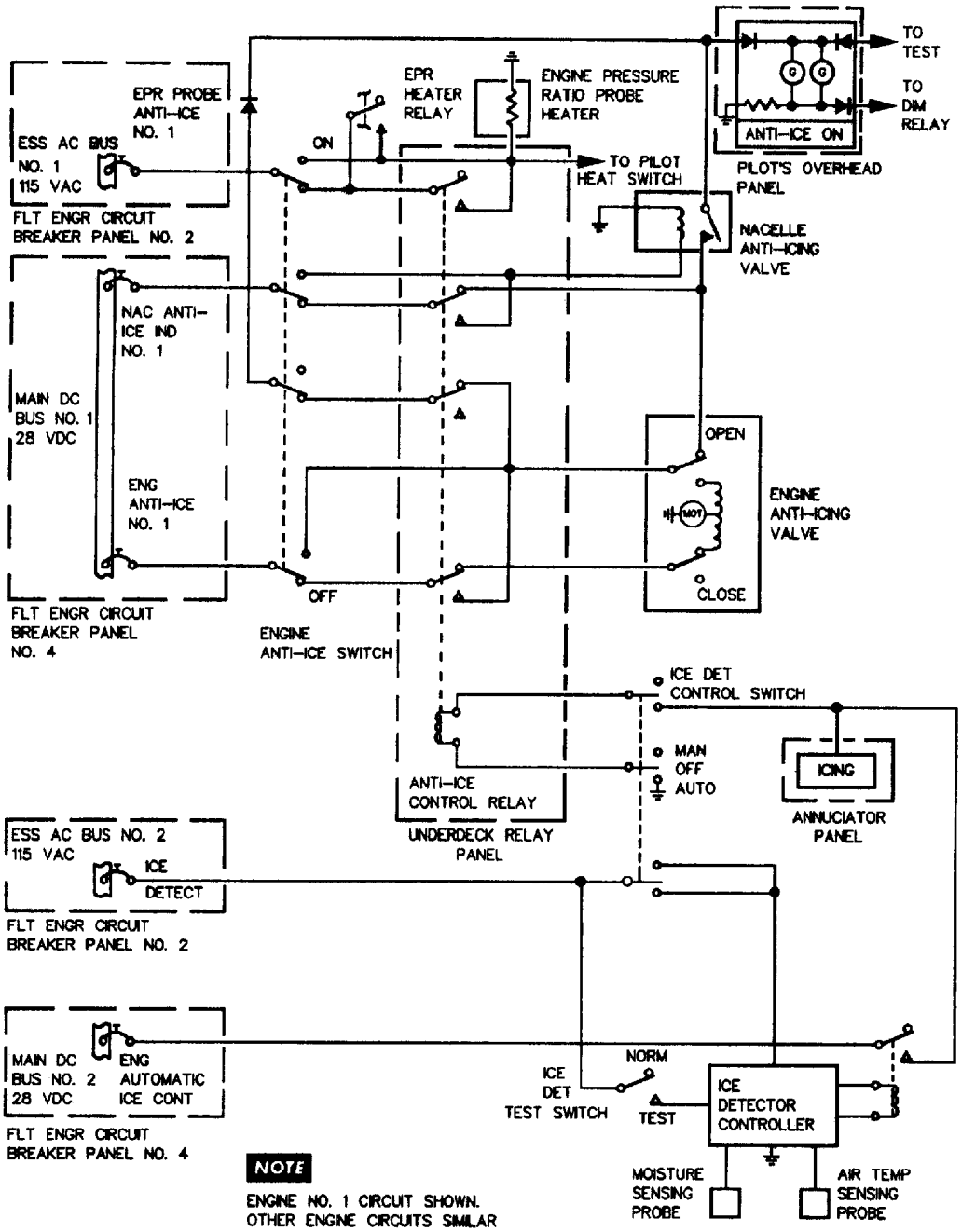

Engine and Nacelle Anti-Icing System Schematic Diagram

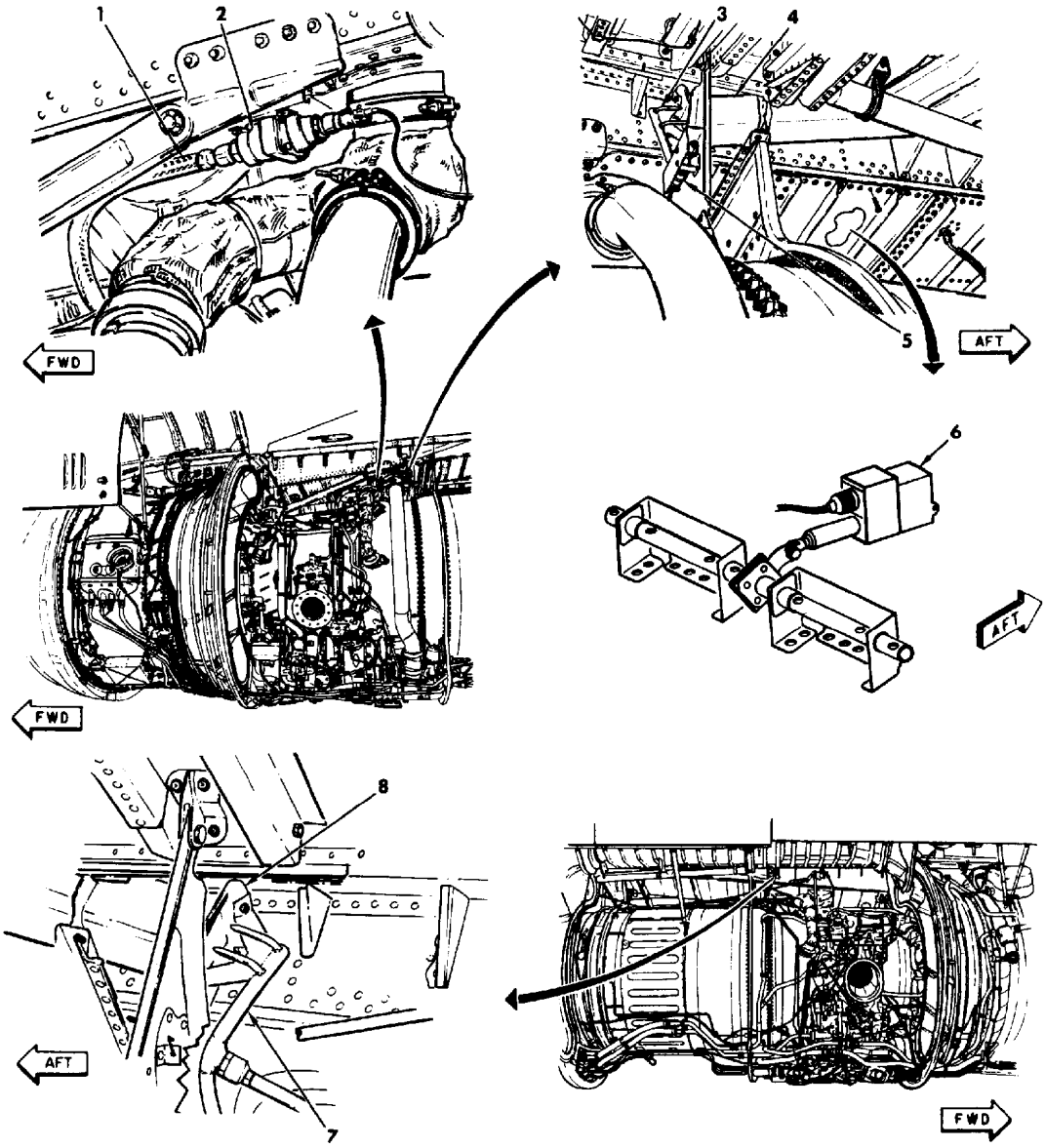

1. BLEED AIR SUPPLY HOSE
2. EJECTOR NOZZLES SHUTOFF VALVE
3. LEFT EJECTOR NOZZLES
4. LEFT EJECTOR DUCT
5. PRESSURE SWITCH
6. EJECTOR DUCT SHUTOFF VALVE ACTUATOR
7. RIGHT EJECTOR NOZZLES
8. RIGHT EJECTOR DUCT

Cooling System Components

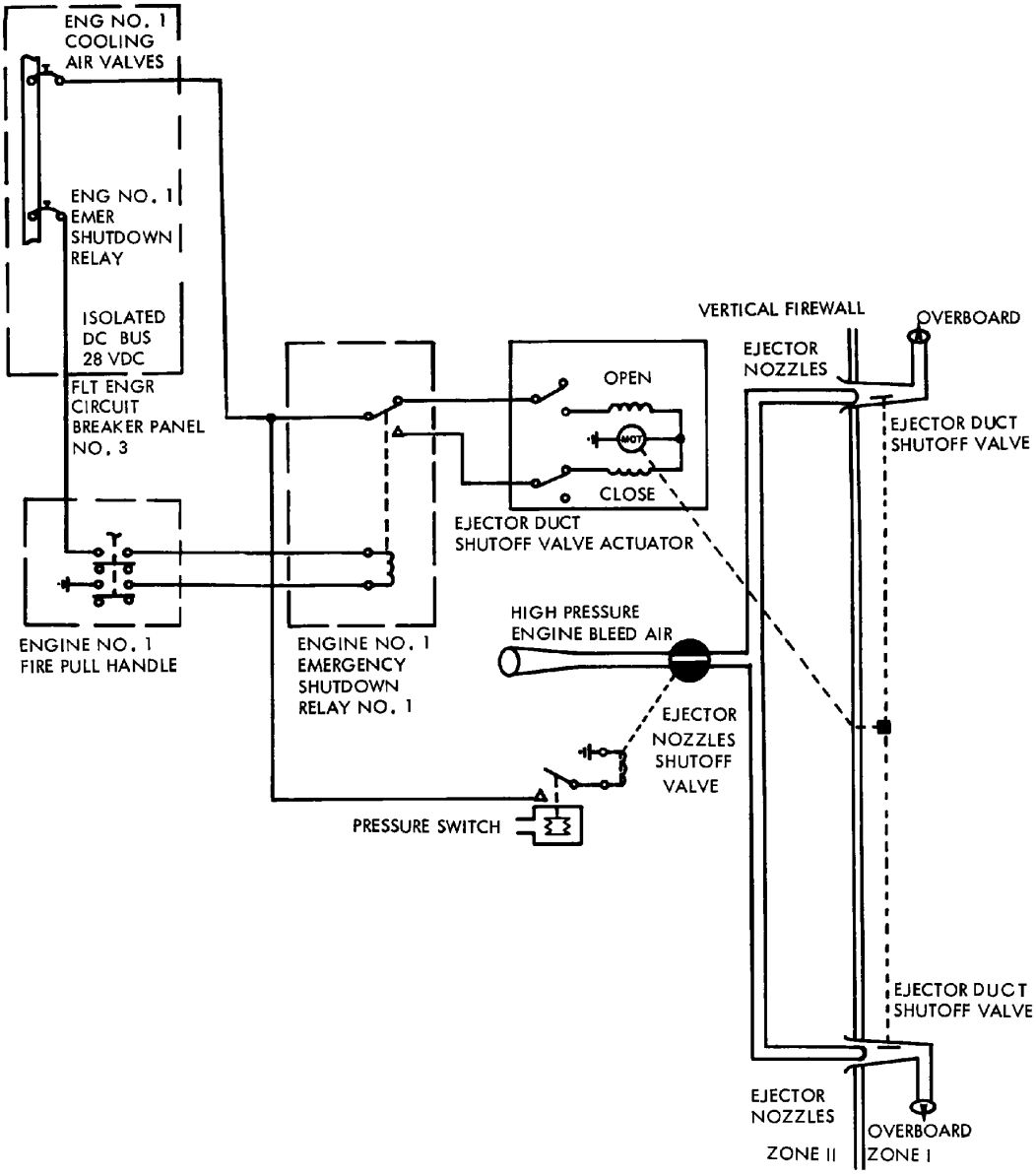

Cooling System Schematic Diagram

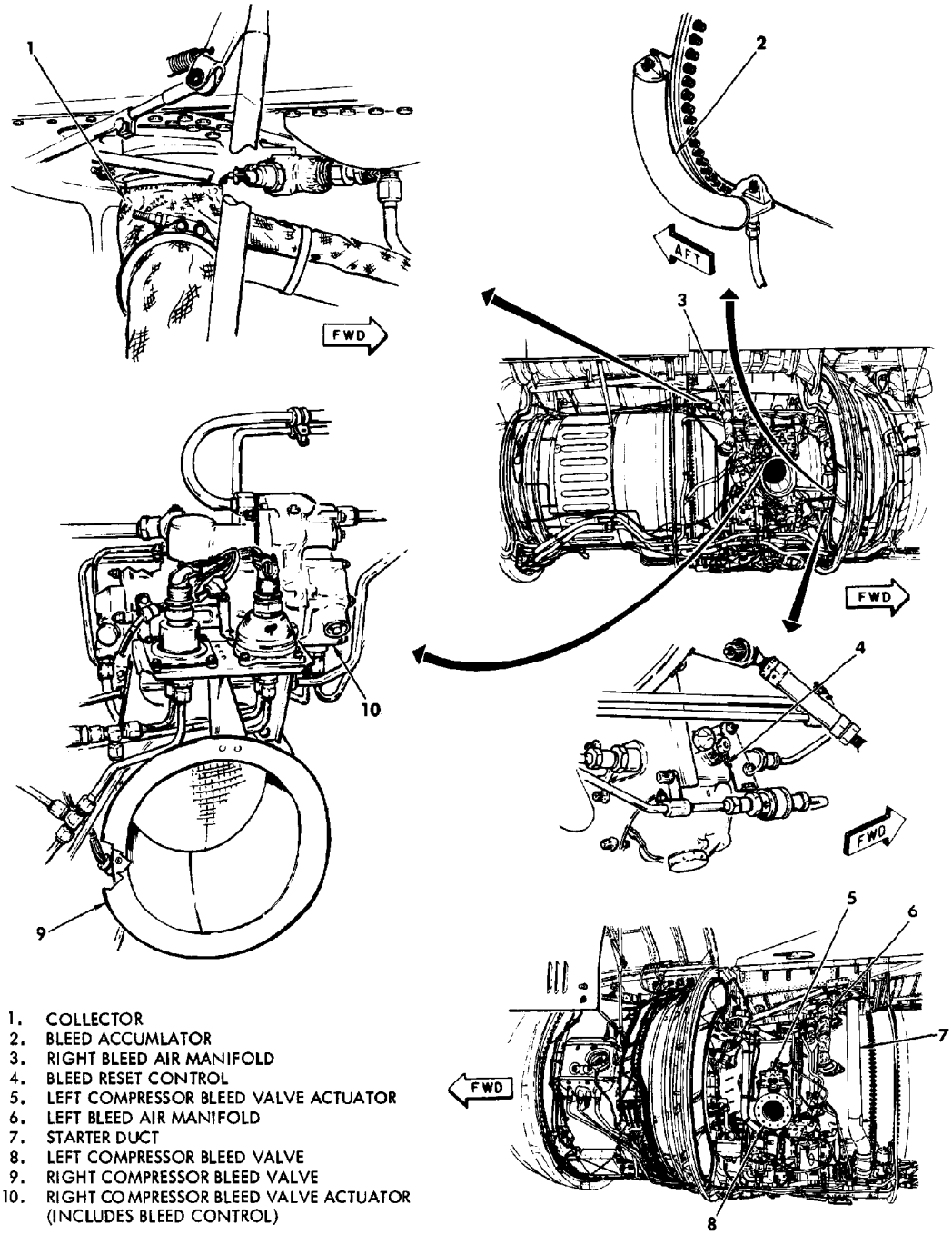

1. COLLECTOR
2. BLEED ACCUMLATOR
3. RIGHT BLEED AIR MANIFOLD
4. BLEED RESET CONTROL
5. LEFT COMPRESSOR BLEED VALVE ACTUATOR
6. LEFT BLEED AIR MANIFOLD
7. STARTER DUCT
8. LEFT COMPRESSOR BLEED VALVE
9. RIGHT COMPRESSOR BLEED VALVE
10. RIGHT COMPRESSOR BLEED VALVE ACTUATOR (INCLUDES BLEED CONTROL)

Compressor System Components

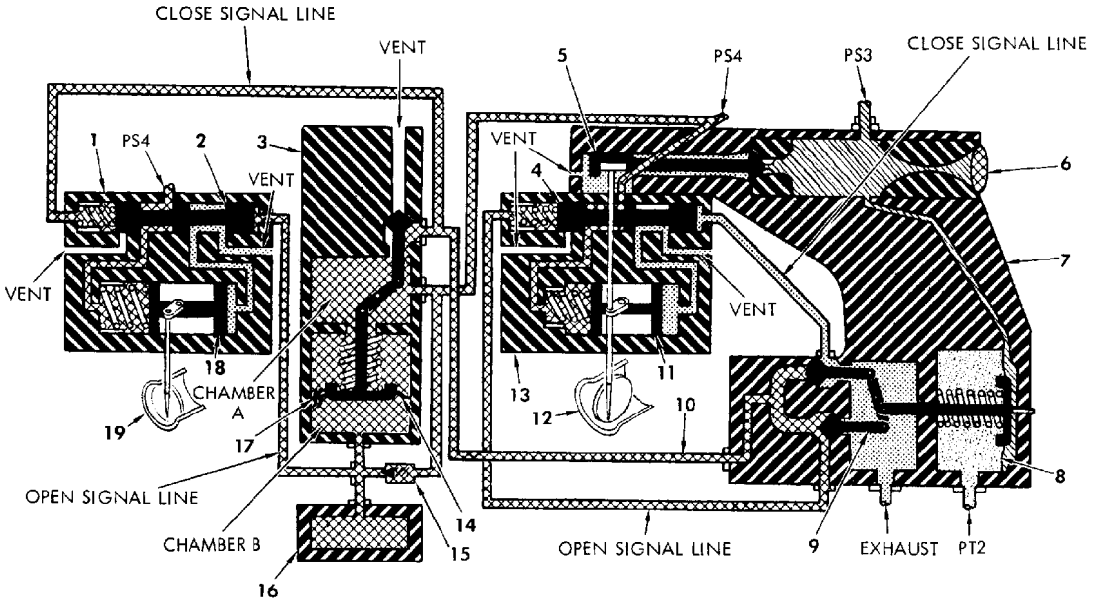

START AND IDLE

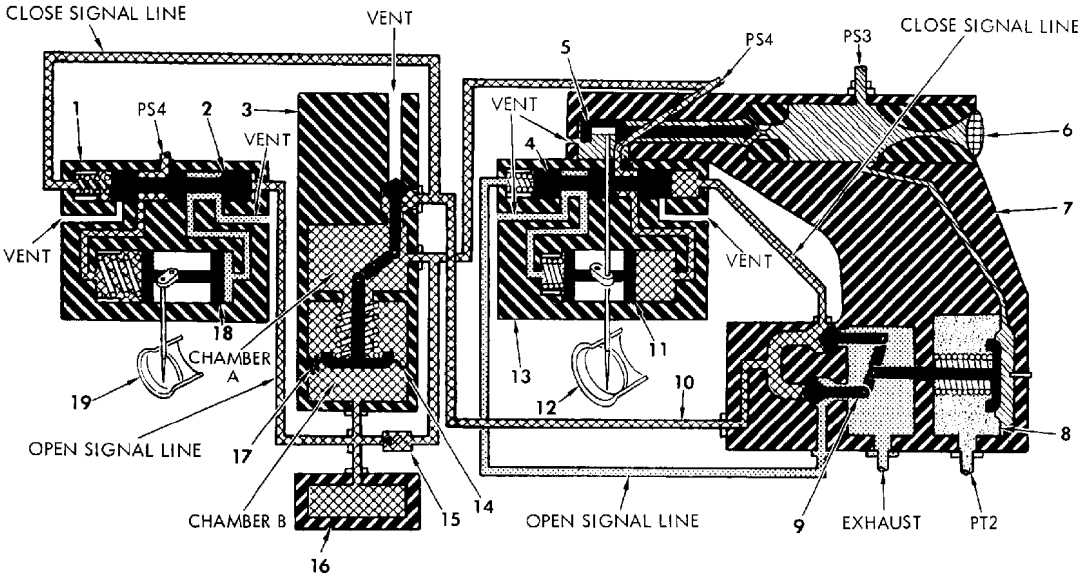

TAKEOFF AND CRUISE

Compressor Unloading System Schematic Diagram (Sheet 1 of 2)

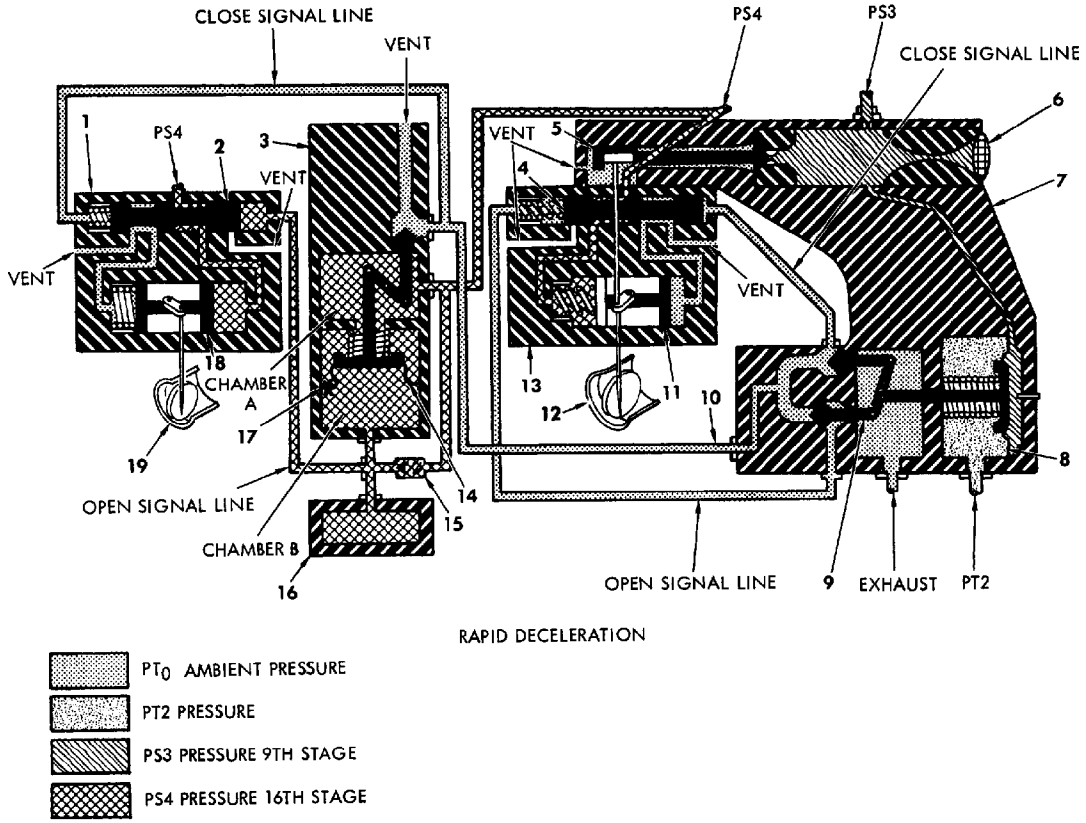

1. LEFT COMPRESSOR BLEED VALVE ACTUATOR
2. PILOT VALVE
3. BLEED RESET CONTROL
4. PILOT VALVE
5. RESET CAM
6. BLEED CONTROL ORIFICE VENT
7. BLEED CONTROL
8. TRANSFER VALVE ACTUATING DIAPHRAGM
9. TRANSFER VALVE
10. PS4 AIR SUPPLY
11. POWER PISTON
12. RIGHT COMPRESSOR BLEED VALVE
13. RIGHT COMPRESSOR BLEED VALVE ACTUATOR
14. BLEED RESET CONTROL DIAPHRAGM
15. 20 PSI CHECK VALVE
16. BLEED ACCUMULATOR
17. BLEED ORIFICE
18. POWER PISTON
19. LEFT COMPRESSOR BLEED VALVE

Compressor Unloading System Schematic Diagram (Sheet 2 of 2)

ENGINE CONTROLS SYSTEM

General Description

The control system enables the flight crew to control engine power by a series of mechanical components starting with the throttle and ending with the fuel control. The system also provides control over the thrust reverser system through mechanical linkage to the thrust reverser control valve. The purpose of the system is to provide simple, direct means of transmitting engine power requirements from the flight crew to the fuel control. The fuel control converts the mechanical input into fuel flow to the combustion chamber. The engine control systems are identical in operation and in component parts. Each system is completely separate from and independent of the others. All components are mechanical, consisting of pushrods, bellcranks, cables, and pulleys. The engine emergency shutdown system is also part of the engine control system. A FIRE PULL handle for each engine enables the flight crew to shut down the engine and related systems through one motion. The handle mechanically shuts off fuel to the engine and electrically shuts off various engine systems.

Controls System Operation

Two sets of four throttles are used to control engine power requirements. Each throttle set can be moved independently of the others. The throttles have two ranges, flight and reverse. A series of pushrods, quadrants, pulleys, and cables transmit throttle lever movement to fuel control inputs. A THROTTLE FRICTION knob is installed to regulate the friction on both sets of throttles. A REVERSE THRUST LIMITER knob is used to limit the engine thrust in the reverse range. Mechanical linkage ties all throttles together so one adjustment sets all throttles. A pylon-mounted tension regulator compensates for changes in cable tension due to airframe deflections and temperature changes. The regulator also contains a surge lock. The surge lock prevents regulator movement if there is a sudden change in cable tension like a broken cable. The control system also includes provisions for an engine emergency shutdown system. A FIRE PULL handle mechanically and electrically shuts down the engine and its related systems. The FIRE PULL handle is connected to a manual fuel shutoff valve on the wing front beam. A series of pulleys, cables, and pushrods connect the two components. A cam on the FIRE PULL handle impeller also actuates an emergency shutdown switch. When actuated, the switch energizes three relays to shut off fuel, hydraulic, electrical, and air systems.

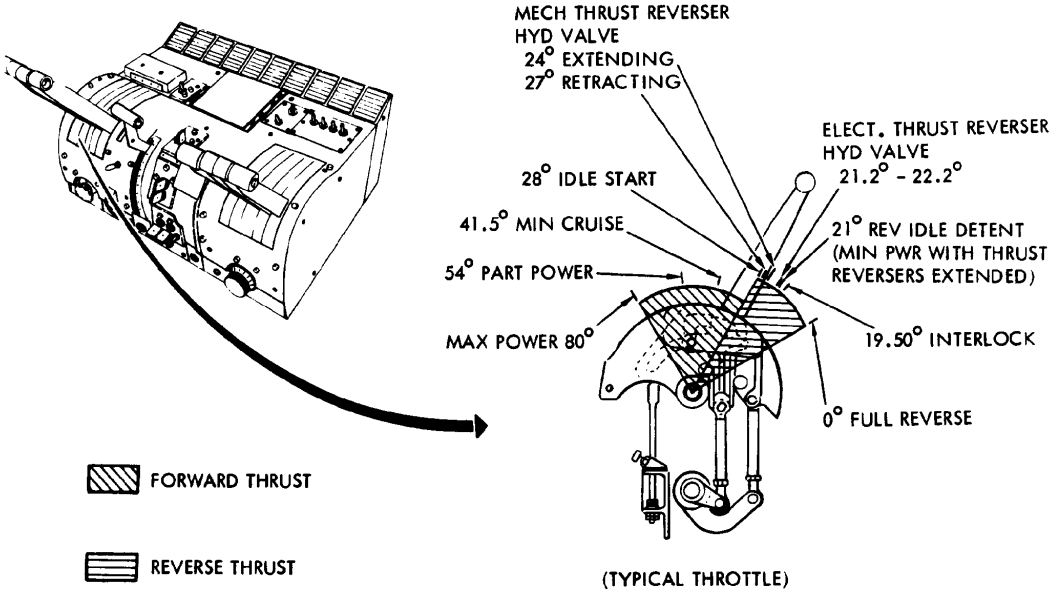

Throttle Quadrant Ranges

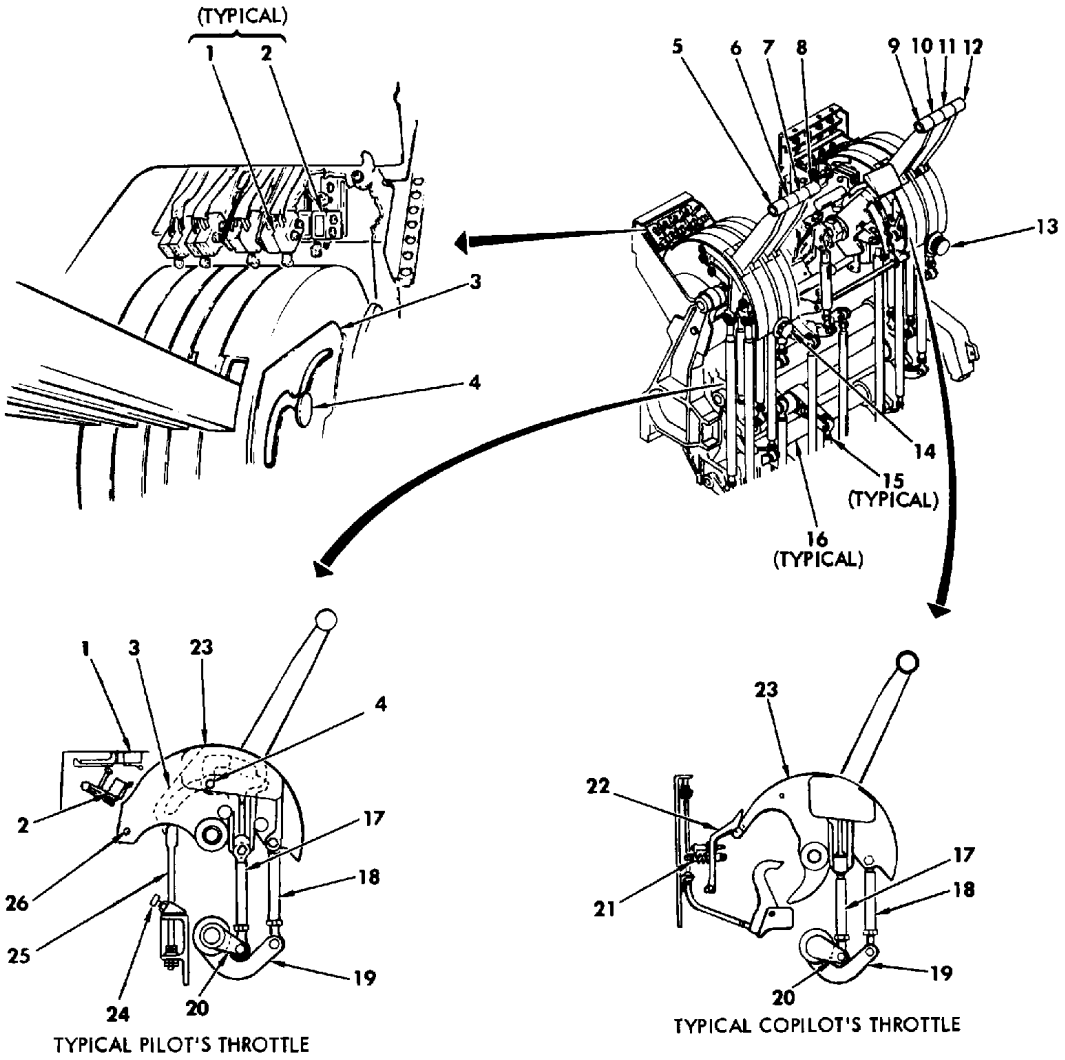

1. MINIMUM CRUISE SWITCHES
2. THRUST REVERSER SWITCHES
3. THROTTLE TRACK
4. ROLLER
5. PILOT'S THROTTLE NO. 1
6. PILOT'S THROTTLE NO. 2
7. PILOT'S THROTTLE NO. 3
8. PILOT'S THROTTLE NO. 4
9. COPILOT'S THROTTLE NO. 1
10. COPILOT'S THROTTLE NO. 2
11. COPILOT'S THROTTLE NO. 3
12. COPILOT'S THROTTLE NO. 4
13. REVERSE THRUST LIMITER KNOB
14. THROTTLE FRICTION KNOB
15. THROTTLE PUSHROD
16. INTERCONNECT TORQUE TUBE
17. LIFT INTERCONNECT ROD
18. POWER INTERCONNECT ROD
19. POWER BELLCRANK
20. LIFT BELLCRANK
21. DETENT SPRING CARTRIDGE
22. DETENT LEVER
23. THROTTLE QUADRANT
24. THROTTLE STOP
25. TRACK ADJUSTMENT ROD
26. RIG PIN HOLE

Center Console Throttle Linkage and Switches

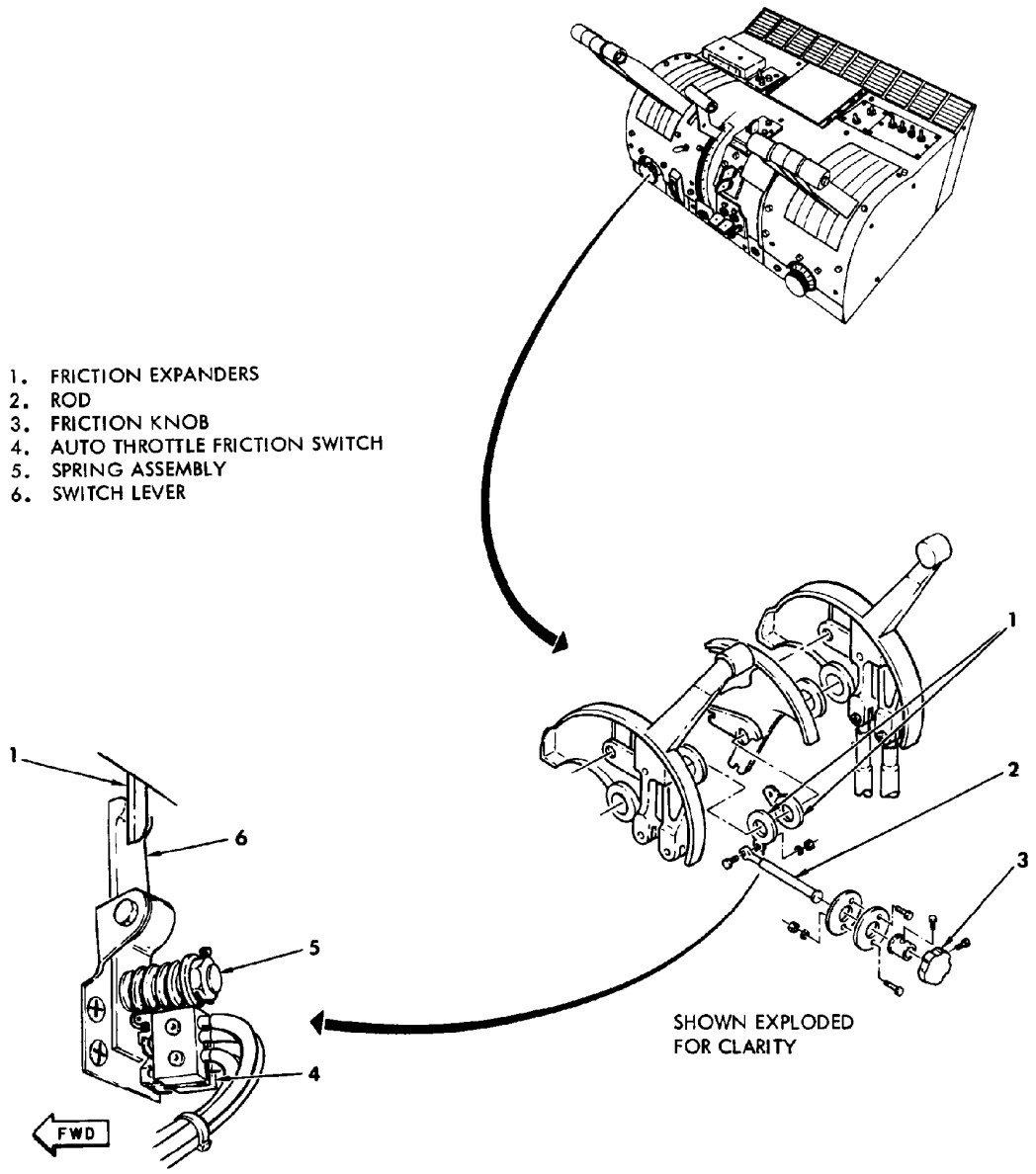

Friction Lock

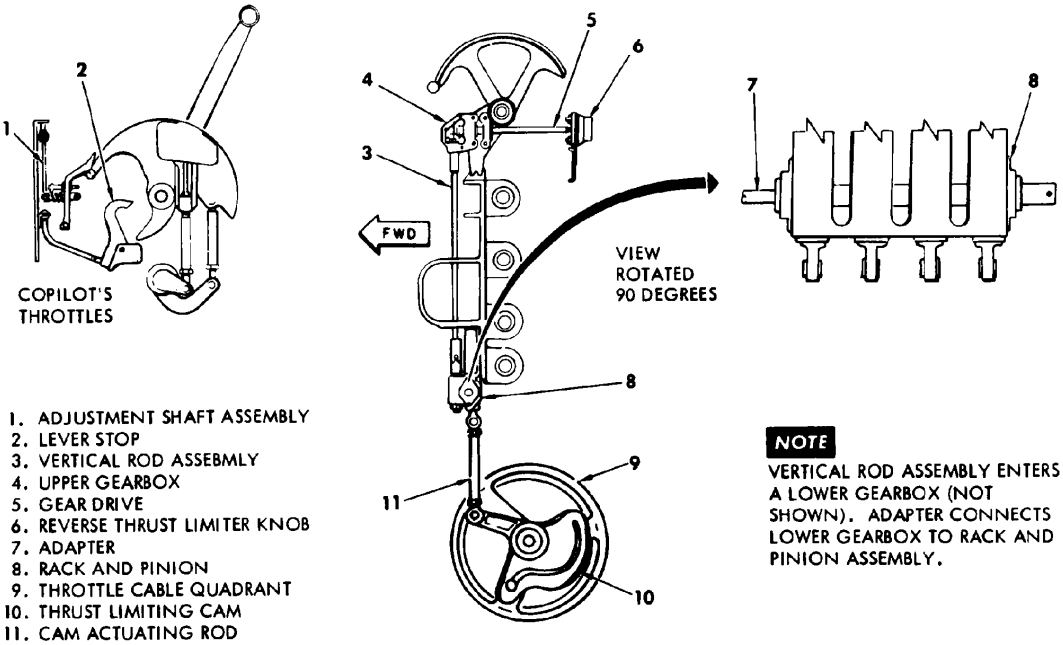

Reverse Thrust Limiter

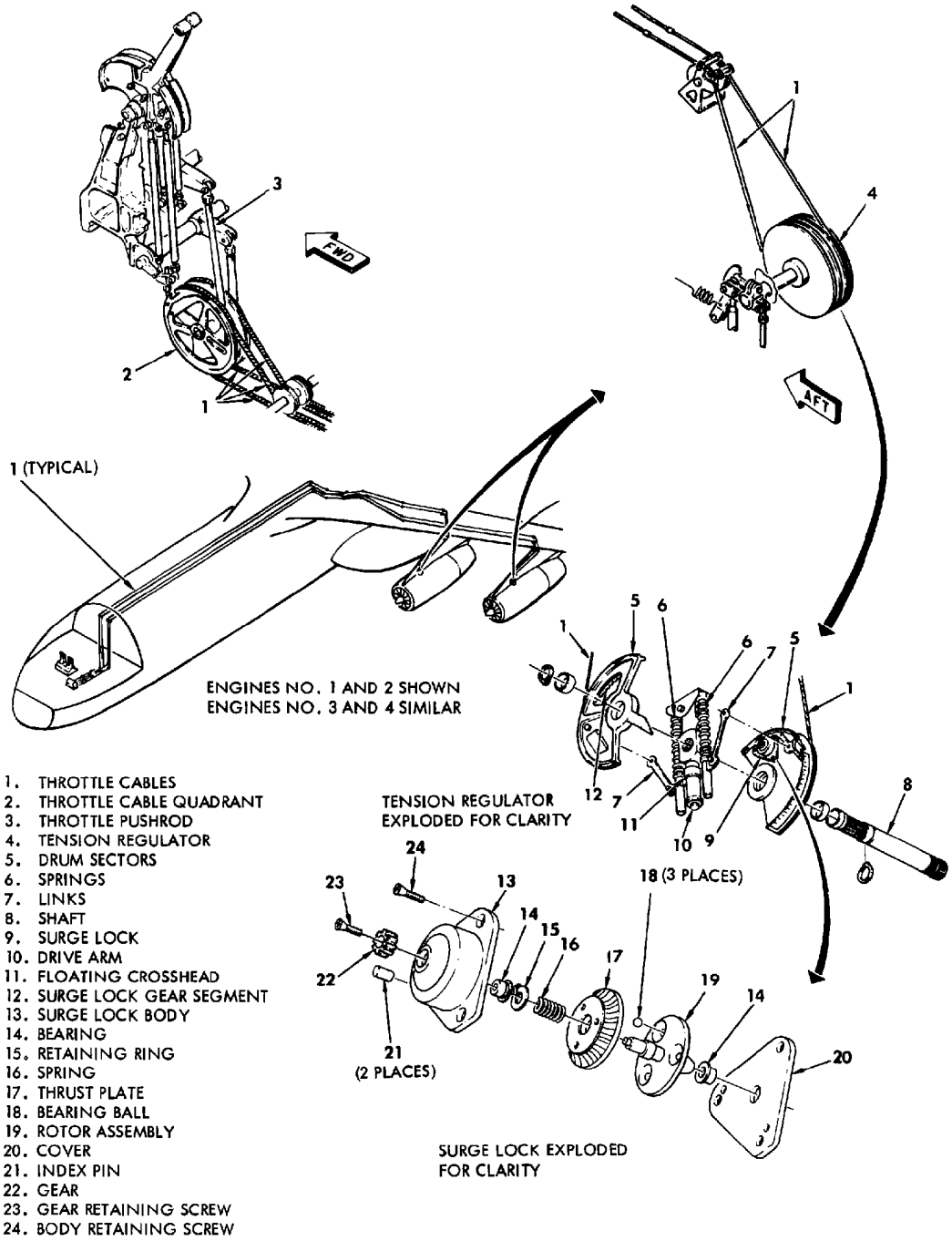

1. THROTTLE CABLES
2. THROTTLE CABLE QUADRANT
3. THROTTLE PUSHROD
4. TENSION REGULATOR
5. DRUM SECTORS
6. SPRINGS
7. LINKS
8. SHAFT
9. SURGE LOCK
10. DRIVE ARM
11. FLOATING CROSSHEAD
12. SURGE LOCK GEAR SEGMENT
13. SURGE LOCK BODY
14. BEARING
15. RETAINING RING
16. SPRING
17. THRUST PLATE
18. BEARING BALL
19. ROTOR ASSEMBLY
20. COVER
21. INDEX PIN
22. GEAR
23. GEAR RETAINING SCREW
24. BODY RETAINING SCREW

Throttle Cables and Tension Regulator

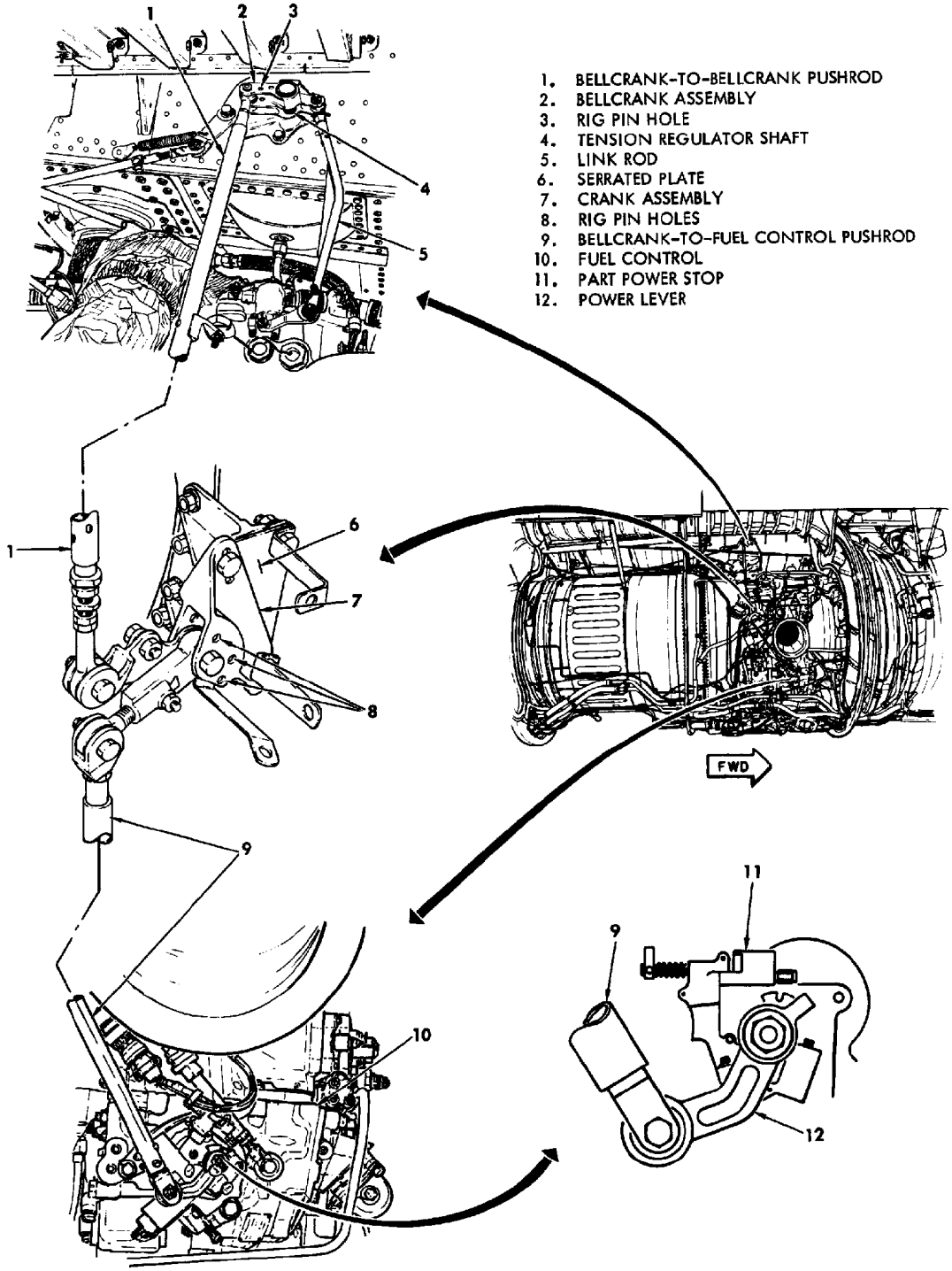

Engine Throttle Linkage

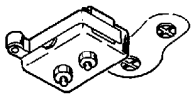

TYPICAL SWITCH

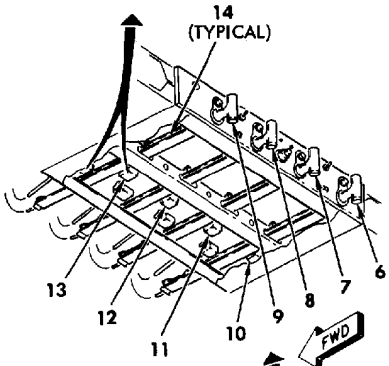

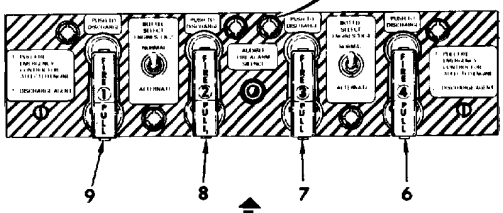

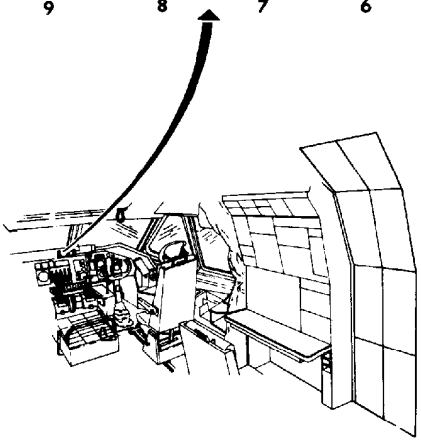

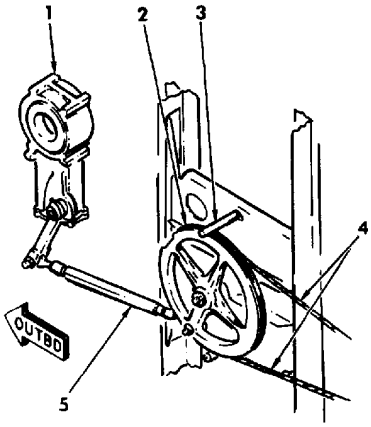

ENGINES NO. 3 AND 4 SHOWN.
OTHER ENGINES SIMILAR

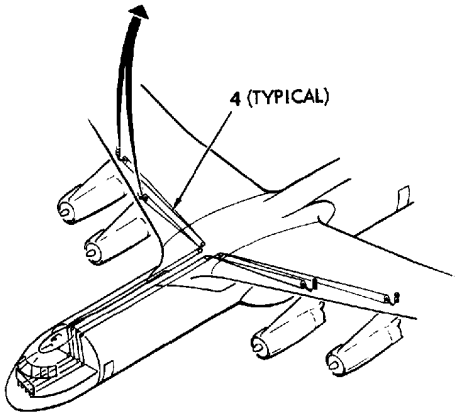

1. FUEL MANUAL SHUTOFF VALVE
2. SHUTOFF VALVE INPUT QUADRANT
3. CABLE GUARD
4. CABLES
5. PUSHROD
6. ENGINE NO. 4 FIRE PULL HANDLE
7. ENGINE NO. 3 FIRE PULL HANDLE
8. ENGINE NO. 2 FIRE PULL HANDLE
9. ENGINE NO. 1 FIRE PULL HANDLE
10. ENGINE NO. 4 EMERGENCY SHUTDOWN SWITCH
11. ENGINE NO. 3 EMERGENCY SHUTDOWN SWITCH
12. ENGINE NO. 2 EMERGENCY SHUTDOWN SWITCH
13. ENGINE NO. 1 EMERGENCY SHUTDOWN SWITCH
14. IMPELLER

Engine Emergency Shutdown System Components

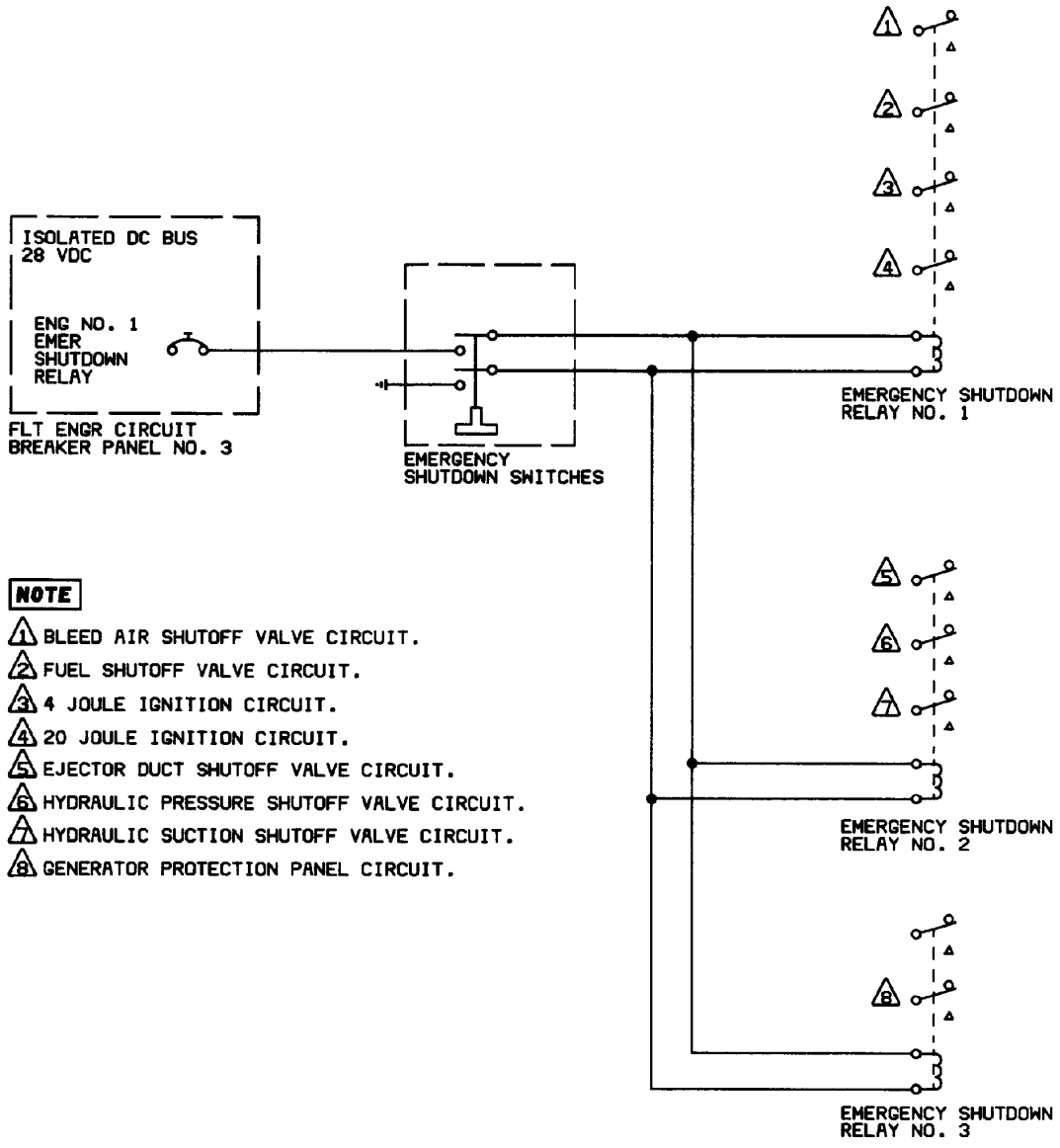

Engine Emergency Shutdown System Schematic Diagram

NOTES

ENGINE INSTRUMENT SYSTEM

General Description

To monitor operation of the engine, there are instruments located on the flight engineer's panel and on the pilot's center instrument panel. These instruments measure the revolutions per minute (RPM) of both the N1 and N2 compressors, the fuel flow (FF), exhaust gas temperature (EGT), and the engine pressure ratio (EPR). All of these instruments are vertical-scale type indicators. In addition, there are oil pressure and oil temperature indicators for each engine located on the flight engineer's panel.

Instrument System Operation

The engine instruments consist of five vertical scale instruments (VSIs). They include indicators for EPR, N1 RPM, N2 RPM, EGT, and FF. An engine vibration indicating (EVI) system is also included. The EPR indicator indicates the pressure ratio between engine inlet air pressure (PTO) and exhaust gas pressure (PT7). A probe mounted on the inboard end of the pylon directs PTO air to a transmitter. Six probes, manifolded together, in the engine exhaust directs PT7 air to the transmitter. The transmitter resolves the pressure ratio into an electrical signal. The signal is fed to the EPR indicator. The N1 RPM indicator indicates the speed of the low pressure compressor. The indicator is calibrated in percent RPM. A tachometer-generator sends signals to an engine data converter (EDC) before being directed to the indicator. The N2 RPM indicator indicates the speed of the high pressure compressor. The N2 system works the same way as the N1 system. The EGT indicator indicates the temperature of the gases exiting the engine. Six dual junction thermocouples are installed in the engine exhaust section. As the thermocouples heat up, a small voltage is generated and sent to the EDC. The EDC conditions and amplifies the signal for use by the indicator. The fuel flow indicator indicates fuel flow to the combustion chamber in pounds per hour (PPH). The transmitter produces an electrical signal which is directed to the EDC. From the EDC, the proper signal is sent to the indicator. The EVI system consists of two pick-ups and an amplifier-indicator. The pickups sense low and high frequency vibrations and send corresponding signals to the amplifier-indicator. The indicator amplifies the signal and displays the result in mils. A test button on each indicator tests continuity of the indicator, wiring, and pickups. A FILTER switch and PICKUP switch provide control to the type of inputs to the indicator.

Engine Indicators

Vertical scale indicators (VSI) at the pilot's and flight engineer's stations are used to monitor EPR, RPM, EGT, and FF. The VSI has a tape that moves up and down and a fixed vertical scale. The position of the tape against the scale indicates the appropriate engine parameter. The VSI, which is internally lighted and hermetically sealed, contains four separate channels, one for each engine. The channels are electrically and mechanically independent of each other. Each channel has its own tape. The tapes are spring-loaded down and driven by servo motors. A black OFF flag is displayed at the top of each with power off. The EPR indicator scale is marked in 0.05 increments with a range from 1.0 degree C to 2.3 EPR. The N1 and N2 indicator scales arc marked

in 5% increments with a range from 0 to 90%. Between 90% and 110%, increments are marked every 1%. The EGT indicator scale is marked in 10 degrees C increments, with a range from 100 degrees C to 800 degrees C. The fuel flow indicator scale is marked in 200 PPH increments with a range from 0 PPH to 16,000 PPH.

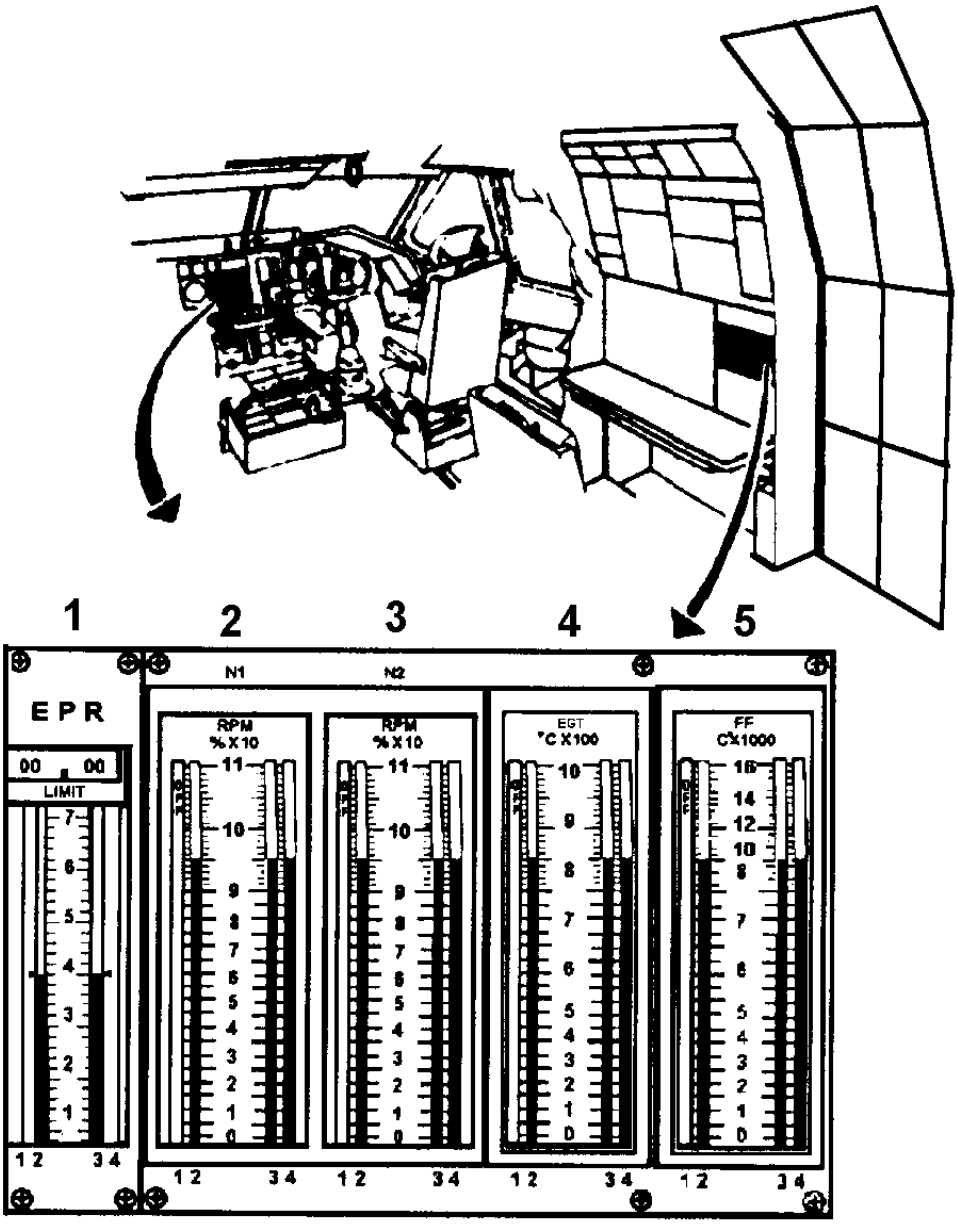

1. EPR INDICATOR
2. N1 RPM INDICATOR
3. N2 RPM INDICATOR
4. EGT INDICATOR
5. FF INDICATOR

Engine Indicators

Engine Data Converter (EDC)

An EDC is used in the indicating circuits for RPM, FF, and EGT. The EDC is located in the right avionics bay. The EDC receives signals from tachometer-generators, fuel flow transmitters, and thermocouples. The signals are processed and converted to signals the VSIs can use. There are 16 modules inside the EDC. Each module provides signals to each channel of its respective VSI. For example, four N1 RPM modules are required to drive the four tapes on the N1 indicator, one module for each VSI tape. The EDC is powered by 115 VAC from the essential AC bus.

1. ENGINE NO. 4 FF MODULE
2. ENGINE NO. 2 FF MODULE
3. ENGINE NO. 4 N2 RPM MODULE
4. ENGINE NO. 4 N1 RPM MODULE
5. ENGINE NO. 3 N2 RPM MODULE
6. ENGINE NO. 3 N1 RPM MODULE
7. ENGINE NO. 2 N2 RPM MODULE
8. ENGINE NO. 2 N1 RPM MODULE
9. ENGINE NO. 1 N2 RPM MODULE
10. ENGINE NO. 1 N1 RPM MODULE
11. ENGINE NO. 1 FF MODULE
12. ENGINE NO. 1 EGT MODULE
13. ENGINE NO. 2 EGT MODULE
14. ENGINE NO. 3 EGT MODULE
15. ENGINE NO. 4 EGT MODULE
16. ENGINE NO. 3 FF MODULE
17. ENGINE DATA CONVERTER

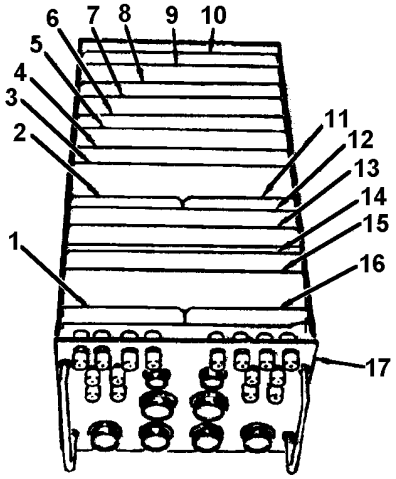

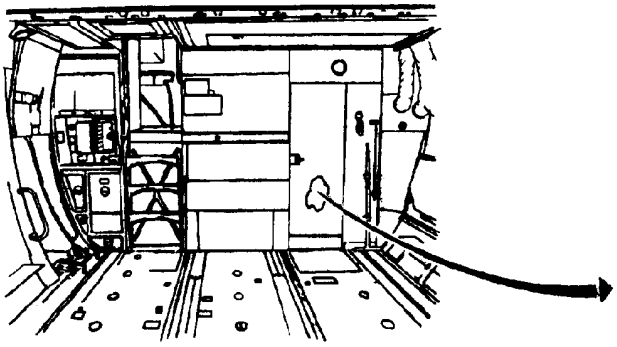

FWD CARGO COMPARTMENT
(LOOKING FWD)

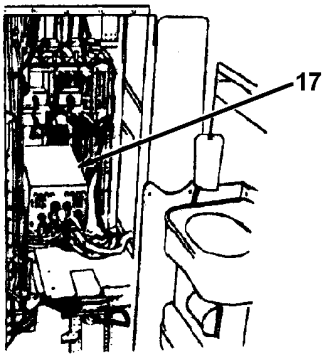

RIGHT AVIONICS BAY
(LOOKING FWD)

Engine Data Converter Modules

Engine Pressure Ratio (EPR) System

The EPR system measures the ratio between engine inlet pressure (PTO) and exhaust gas pressure (PT7). The pressure ratio gives an accurate indication of engine power. The system consists of one transmitter for each engine, one ambient pressure probe, and six exhaust gas pressure probes. The transmitter is located inside the pylon. The EPR probe is mounted on the inboard end of each pylon. The exhaust gas pressure probes are located inside the turbine exhaust case. Ambient pressure is taken from the pitot-type probes. Each probe is anti-iced by electrical heaters which are controlled by the anti-icing system. PTO pressure is routed to the interior of the engine pylon to the EPR transmitter. Turbine exhaust pressure is total pressure taken in the exhaust. The six probes in the exhaust case are manifolded together. A flexible hose connects the manifold to a fitting in the base of the pylon structure. A small coupling and an aluminum tubing are connected to the EPR transmitter inside the pylon. The transmitter senses PTO and PT7 pressures through a bellows pickup assembly and converts the mechanical movement of the bellows into an electrical signal. The signal is sent directly to the VSI, where it is amplified and used to drive the servo motor connected to the tape. The EPR transmitter is powered by 115 VAC from the isolated AC bus.

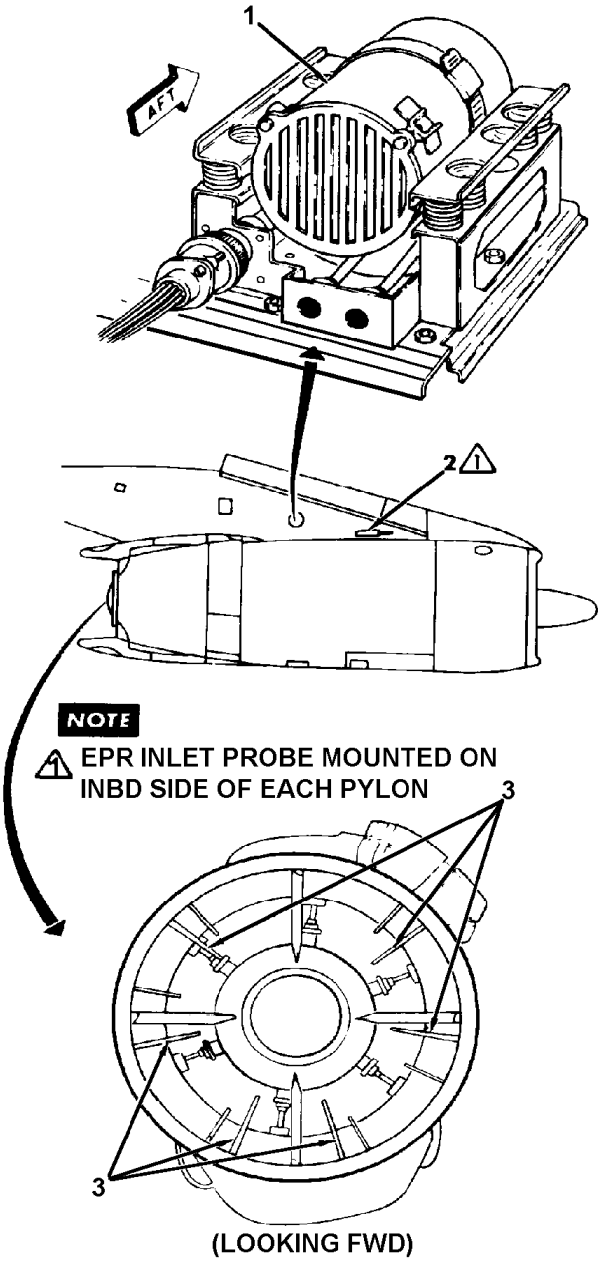

1. EPR TRANSMITTER
2. EPR INPUT PROBE (PT0)
3. EPR OUTPUT PROBES (PT7)

Engine Pressure Ratio (EPR) System Components

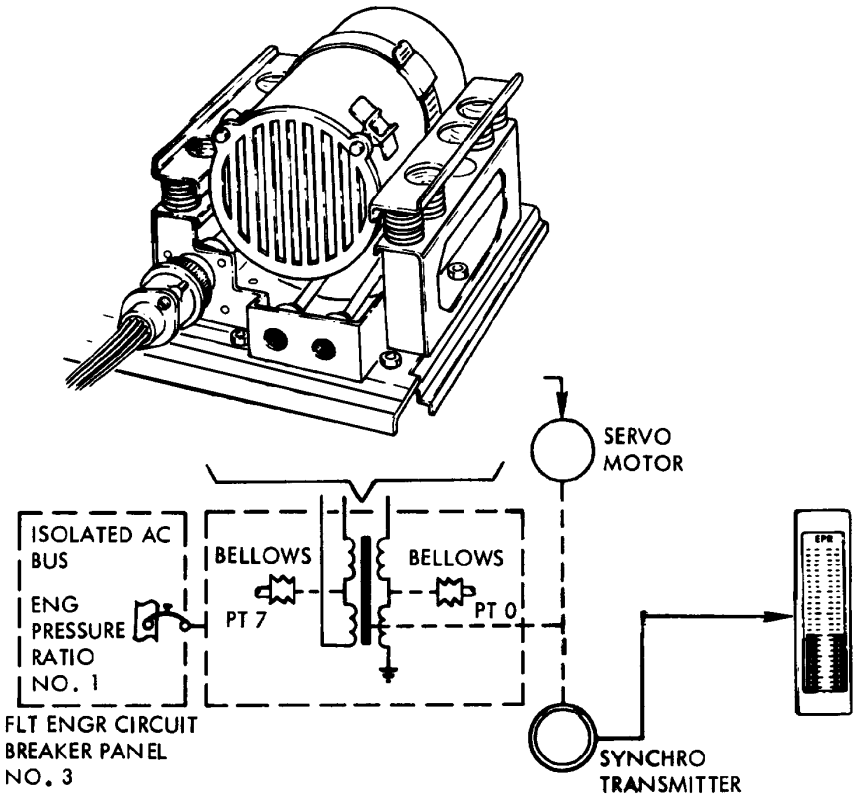

Engine Pressure Ratio (EPR) System Schematic Diagram

Revolutions Per Minute (RPM) System

The RPM system measures the speed of the N1 and N2 compressors. Both indicating systems are identical in operation. The N1 tachometer-generator is mounted to the front accessory gearbox. The tachometer-generator measures the speed of the low pressure compressor. The N2 tachometer-generator is mounted to the aft right side of this main accessory gearbox. Since the gearbox operates off the high pressure compressor, the tachometer-generator measures N2 speed. As the tachometer-generators rotate, they produce a voltage proportional to their speed. The voltage signal is fed to the engine data converter. The signal is processed by the converter and sent to the applicable channel of the VSI. Power to drive the tapes comes from the EDC.

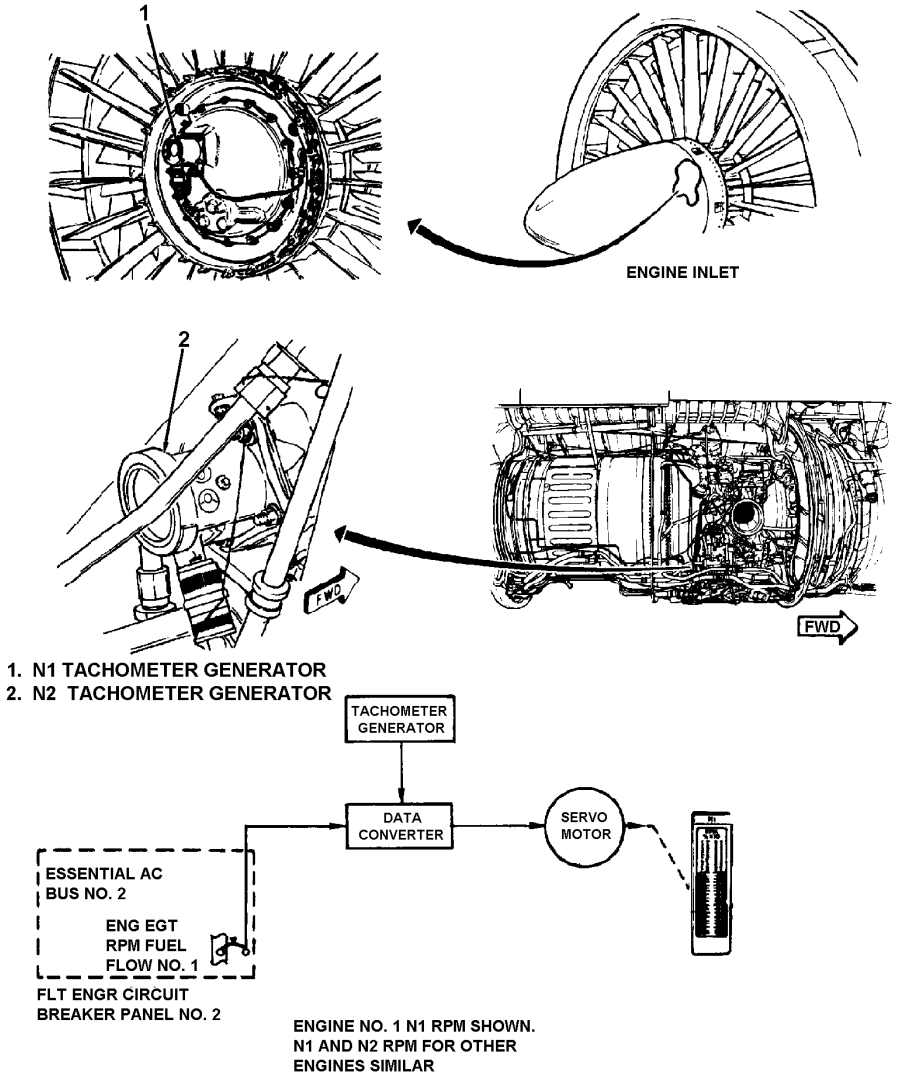

Engine Revolution Per Minute (RPM) System Components and Schematic Diagram

Exhaust Gas Temperature (EGT) System

The EGT system measures the temperature of the exhaust gases leaving the turbine. Six dual-junction thermocouples are mounted around the turbine exhaust case. The thermocouple junction is made of alumel and chrome metals. As the temperature increases, the dissimilar metals produce a small voltage. Connections from one of the junctions of each thermocouple are wired in parallel. An average of the voltages from each thermocouple can be taken using this arrangement. The voltage signal from the thermocouples is sent to the data converter where it is processed. An output signal from the data converter is sent to the applicable channel of the EGT indicator. Power to drive the tapes comes from the EDC. A test harness connection is provided for use during engine testing.

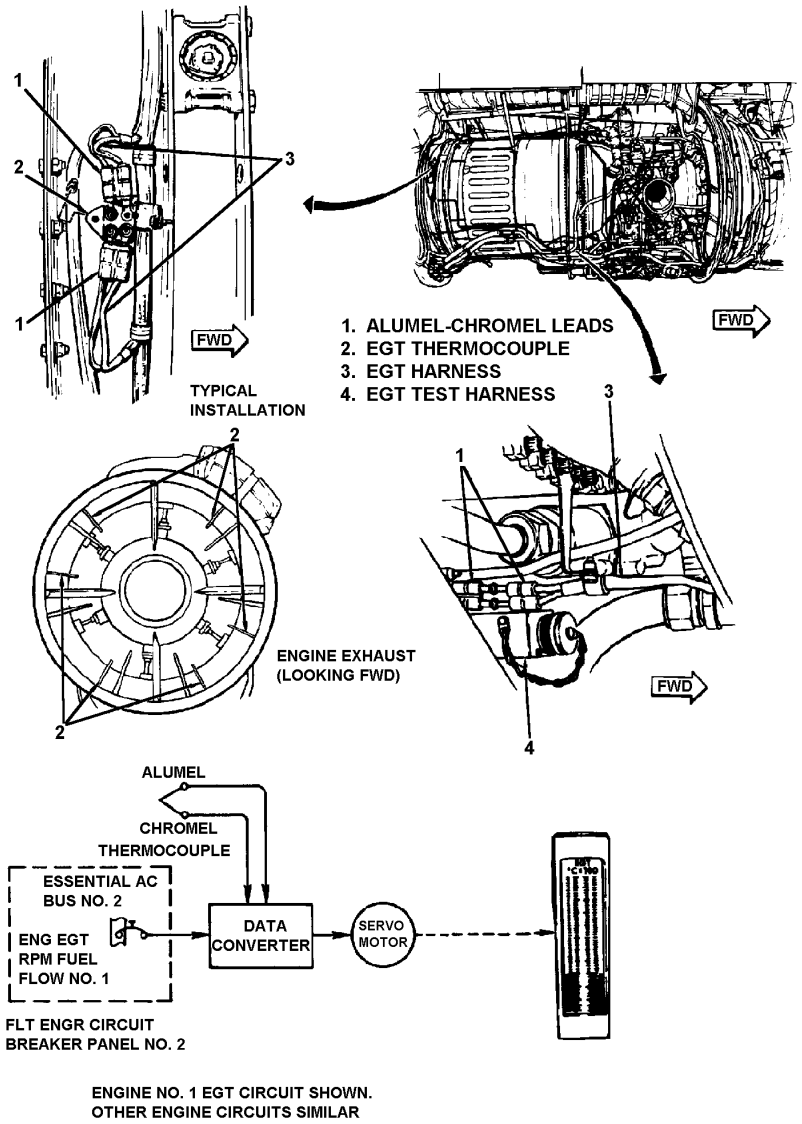

Engine Exhaust Gas Temperature (EGT) System Components and Schematic Diagram

Engine Vibration Indicating (EVI) System

Four vertical-scale type indicators provide the flight engineer with indications of engine vibrations. Each of the EVI systems consists of an integrally-lighted vibration amplitude, indicator-amplifier, and two vibration sensing devices. A FILTER switch and a PICKUP switch maintain control over all four indicating systems. The four indicators and two switches are located on the flight engineer's lower instrument panel. There are two vibration pickups on each engine. One is located on the forward end of the engine and one on the aft end. The forward vibration pickup is located on the left side of the compressor section and the aft pickup is located on the bottom left side of the turbine section.

Operation of each of the vibration indication systems is identical. The two vibration pickups of the engine sense the amplitude of engine vibration. One is operative at all times depending on the PICKUP switch position, either FWD or AFT. Vibration signals are amplified in the indicator and position the indicator pointer to register the average vibration displacement on a 0 to 5 mil scale. The scale is graduated in 0.5 mil increments. The EVI system is capable of sensing both high and low frequency vibrations. The FILTER switch has two positions, HI and LOW. The switch is spring-loaded to the LOW position. In this position the amplitude of the total frequency range of vibrations is presented on the indicator. Holding the FILTER switch to HI allows only the high frequency vibrations to be presented on the indicator. The indicator incorporates a PUSH-TO-TEST button to check the continuity of the wiring and vibration pickups. When the button is pressed, the indicator pointer moves to approximately 3.5 mils. Electrical power comes from two separate sources. The 115 VAC, 400-Hz power for indicator operation comes from the isolated AC bus. The 28 VDC power for relay operation comes from the isolated DC bus.

Monitoring engine vibration can provide early evidence of progressive bearing failure, damage from over-temperature, turbine rub, compressor rub, and foreign object damage (FOD). Sustained increasing vibration readings may be an indication of poor mechanical condition in the engine requiring investigation. A rapid or abrupt change in vibration, even though lower than the maximum limit, is considered an indication of impending trouble. This excludes the normal rapid changes in vibration during engine acceleration and deceleration. No two engines have exactly the same vibration characteristics. In general, the basic vibration for a given engine is established in the first flights after the engine is installed. When high vibration readings are observed, diagnosis may be aided by observing other engine instruments. Most normal engines indicate a vibration level somewhere between 0 and 1 mil.

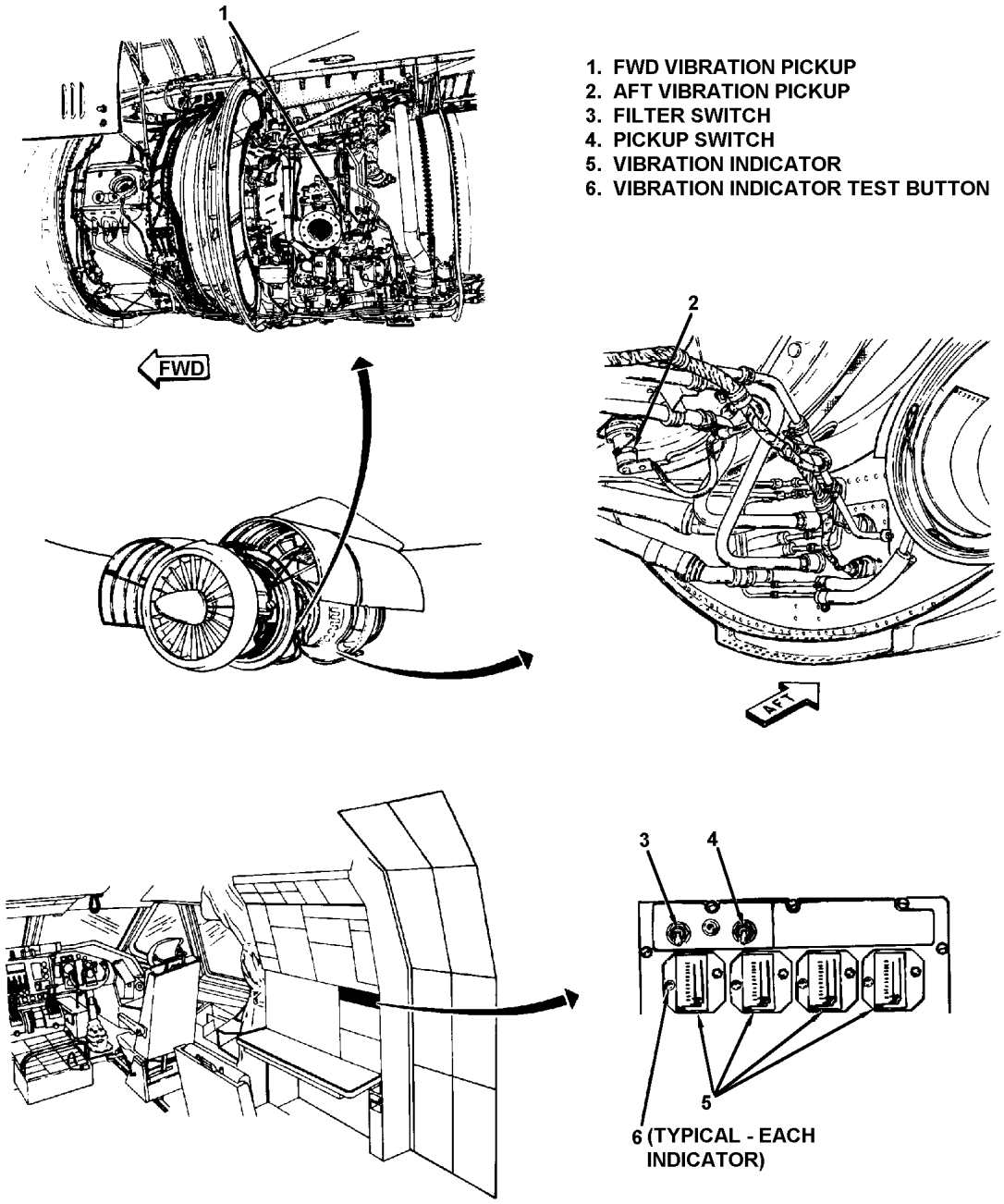

Engine Vibration Indicating (EVI) System Components

ENGINE EXHAUST SYSTEM

General Description

Each engine is equipped with an exhaust system. It includes the primary exhaust nozzle and thrust reverser system. The thrust reverser system deflects exhaust gases forward slowing the airplane during ground roll. The thrust reverser system is operated by a pump. Oil from the constant speed drive (CSD) oil tank enters the thrust reverser pump. The pump directs oil to the thrust reverser control valve under pressure. Mechanical and electrical inputs to the control valve direct the oil to extend or retract two actuators. The actuators open or close the thrust reverser doors through a mechanical linkage. The thrust reverser system is operated by placing the throttles in the reverse thrust range. A mechanical lockout prevents the throttles from being moved to FULL REV position until the thrust reverser doors are fully open. THRUST REV NOT LOCKED, THRUST REV EXTENDED, and THRUST REVERSER PRESS lights come on during various stages of the operating cycle. When the thrust reverser system is stowed and locked, all three lights are normally off.

Exhaust System Operation

Each engine contains an exhaust system. The exhaust system, or hot end assembly, is used to direct exhaust gases aft providing thrust. A primary exhaust nozzle directs engine exhaust gases aft. Fan discharge air is also directed aft through a duct around the primary exhaust nozzle. Combined, the fan and engine exhausts produce the net engine thrust. The exhaust system also deflects the exhaust forward through a thrust reverser system. Each independent thrust reverser system operates through the throttles. The system permits reverse thrust and is used during ground operation only. Two target-type, thrust reverser doors are extended or stowed by hydraulic actuators acting through a mechanical linkage.

The thrust reversers are mechanically and electrically actuated. Each thrust reverser system consists of a hydraulic pump, filter, two actuators, a control valve, a flow regulator, a mechanical lockout, and indicator lights. Oil for actuation of the system is taken from the CSD reservoir. The fluid is circulated through the thrust reverser system and then ported through the CSD oil cooler and back to the reservoir. The thrust reverser pump provides the pressure to open or close the thrust reverser doors. It also circulates oil through the system for cooling purposes when the system is stowed. Oil from the pump circulates through a filter to remove contaminants. The thrust reverser control valve directs fluid to the extend or retract side of the actuators. It is also used to help regulate CSD oil flow.

One electrical input and two mechanical inputs to the control valve are required to extend or retract the thrust reversers. The electrical input is provided by two sources. During initial deployment, a thrust reverser switch in the throttle quadrant energizes the control valve. After the thrust reverser linkage unlocks, a not locked relay de-energizes. The relay remains de-energized until the thrust reverser stows and locks. Both mechanical inputs are provided through the throttle linkage. A link rod attached to a bellcrank assembly provides one input. The other input comes from an actuator screw mounted on one of the fuel control pushrods. The actuator screw moves a lockout

lever permitting the control valve to deploy the thrust reverser. A flow regulator is installed in the line between the control valve and the actuators. The regulator provides regulated flow to the actuators during thrust reverser deployment. It provides a snubbing action against air loads. When stowing the thrust reverser, the regulator provides free flow back to the control valve. The actuators provide the actual force required to move the doors. They contain an orifice and check valve which permits cooling flow when the thrust reverser is not being used. Target-type thrust reverser doors are connected to the actuators through linkage. The linkage moves drive links aft and outboard opening the doors. The links move forward and inboard during the door closing cycle. Links lock overcenter holding the thrust reverser doors closed. A hook and striker arrangement is also used to aid the overcenter locking mechanism during high aerodynamic loads. A mechanical lockout connects to the thrust reverser linkage. A hook assembly keeps the throttles from being moved to FULL REV until the doors are fully open. Switches in the thrust reverser system provide inputs to control and indication circuits. Two extended switches turn on the THRUST REV EXTENDED light when the doors are fully open. Two retracted switches control a not locked relay. The relay controls the THRUST REV NOT LOCKED light and holding circuit. The light comes on any time the thrust reverser is unlocked. A THRUST REVERSER PRESS light comes on when the thrust reverser control valve is pressurized.

Thrust Reverser System Components

The thrust reverser system consists of a thrust reverser pump, filter, control valve, flow regulator, actuators, doors, actuating mechanism, switches, and mechanical lockout.

Thrust Reverser Operation

When the throttle is retarded to REV IDLE, the thrust reverser doors will deploy to the extended position. A mechanical lockout prevents increasing reverse power until the doors are fully extended. When the doors are fully extended, the lockout will drop out and reverse power can be increased. Moving the throttle forward out of the reverse range will retract the doors and lock them in the stowed position.

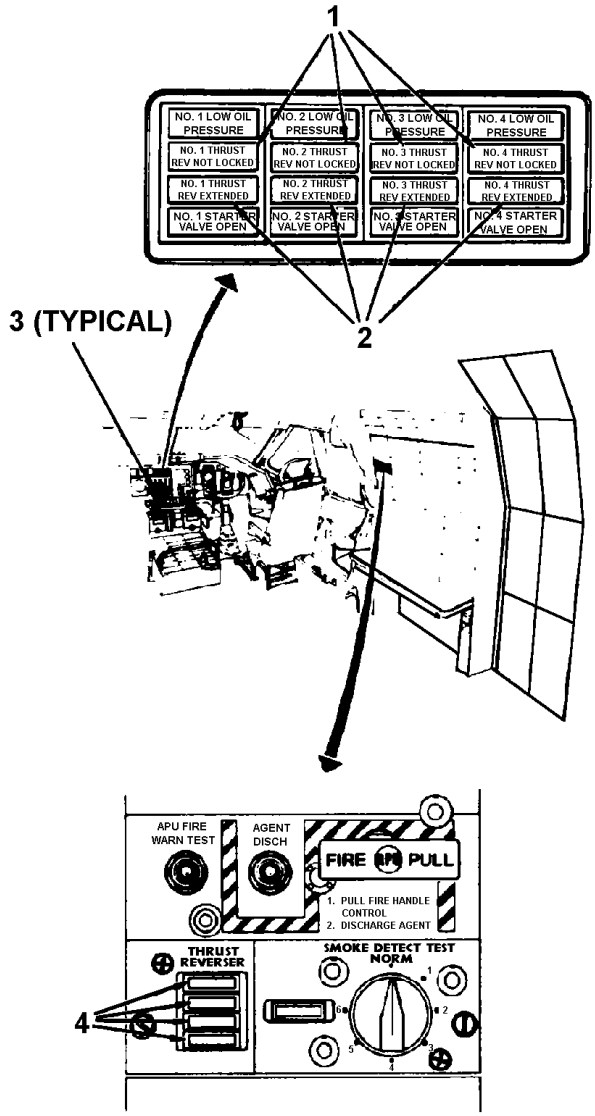

1. THRUST REV NOT LOCKED LIGHTS
2. THRUST REV EXTENDED LIGHTS
3. THROTTLES
4. THRUST REVERSER PRESS LIGHTS

Thrust Reverser Controls and Indicators

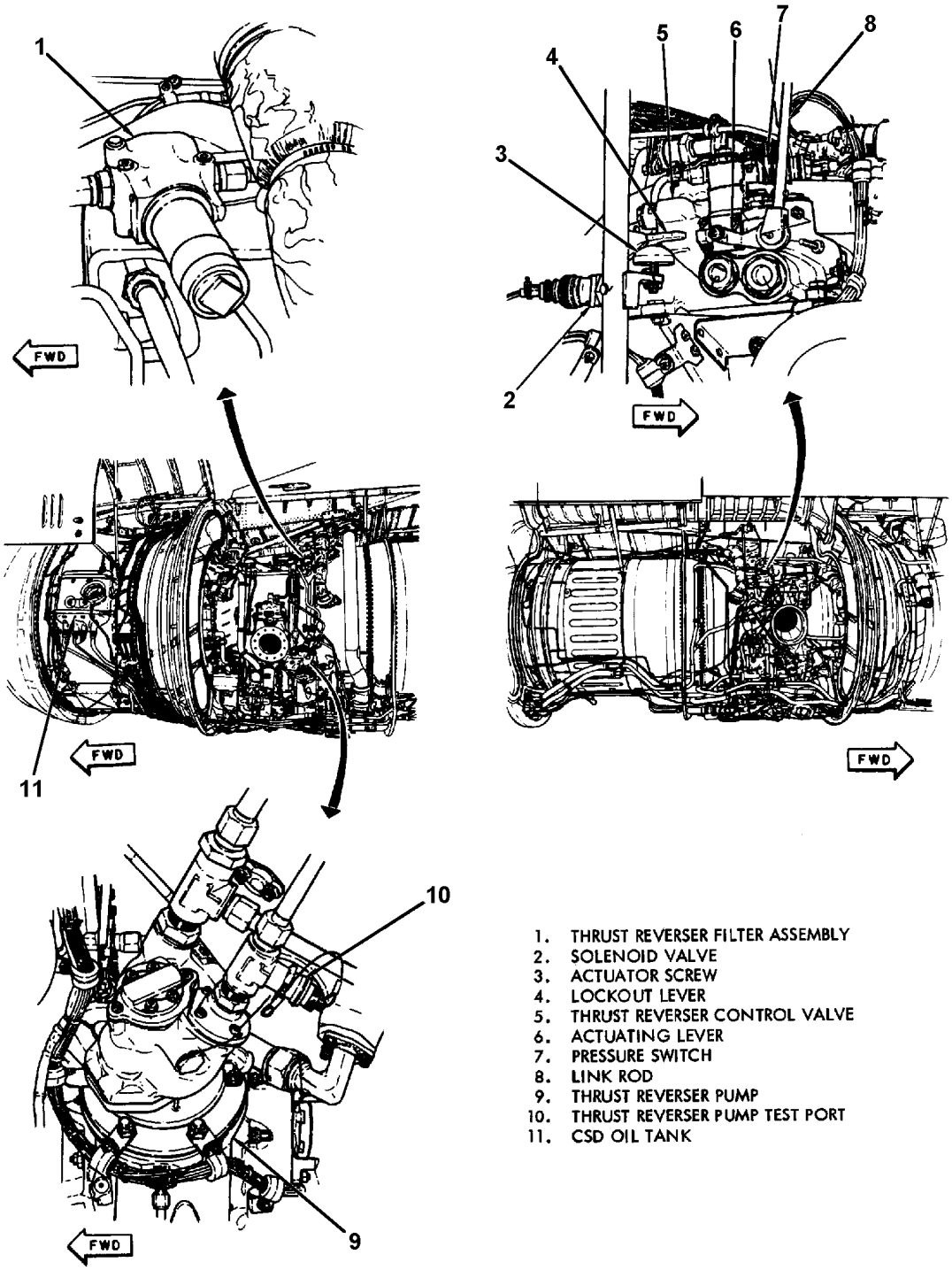

1. THRUST REVERSER FILTER ASSEMBLY
2. SOLENOID VALVE
3. ACTUATOR SCREW
4. LOCKOUT LEVER
5. THRUST REVERSER CONTROL VALVE
6. ACTUATING LEVER
7. PRESSURE SWITCH
8. LINK ROD
9. THRUST REVERSER PUMP
10. THRUST REVERSER PUMP TEST PORT
11. CSD OIL TANK

Thrust Reverser Pump, Filter, and Control Valve

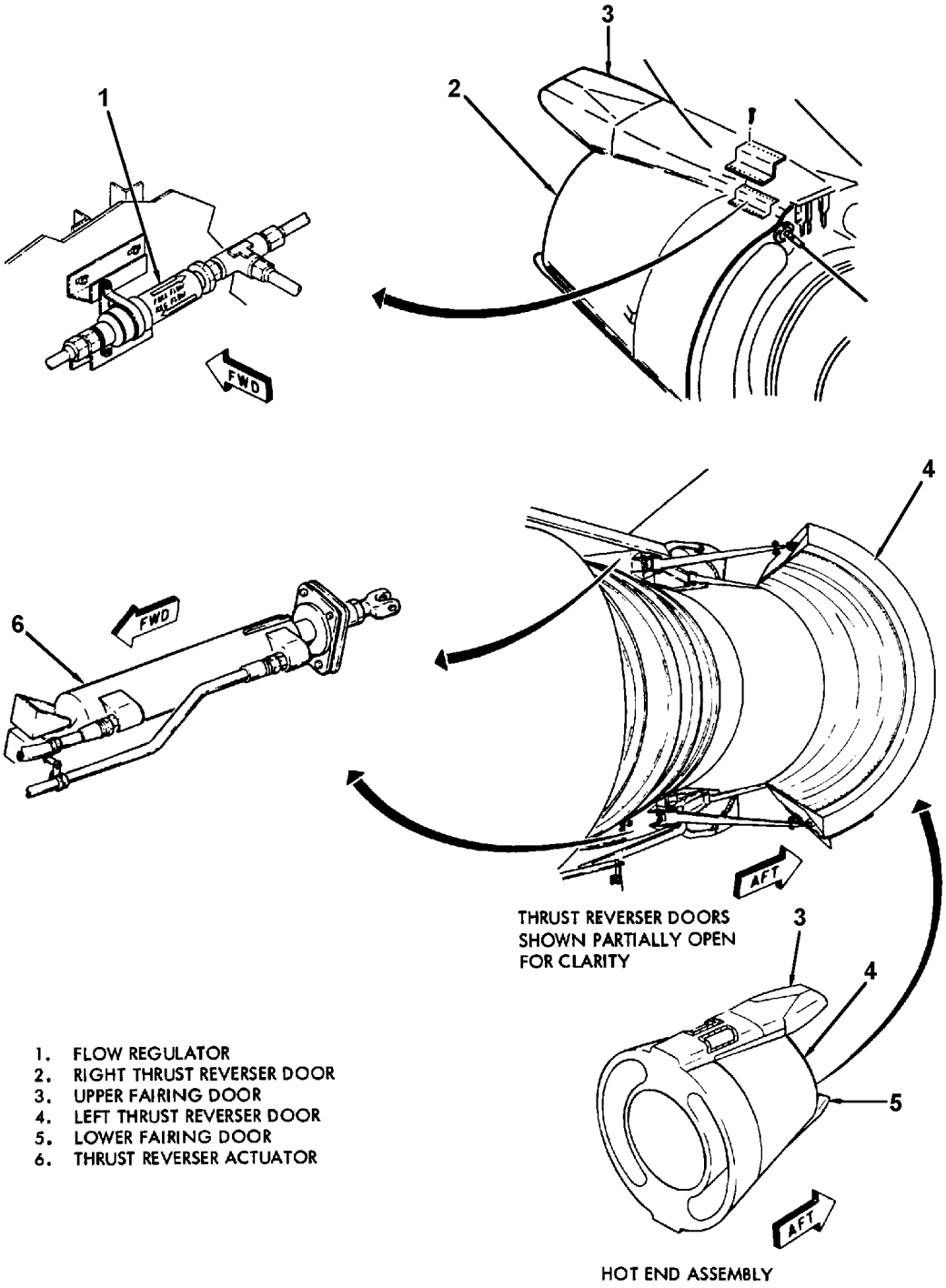

1. FLOW REGULATOR
2. RIGHT THRUST REVERSER DOOR
3. UPPER FAIRING DOOR
4. LEFT THRUST REVERSER DOOR
5. LOWER FAIRING DOOR
6. THRUST REVERSER ACTUATOR

Thrust Reverser Flow Regulator, Actuators, and Doors

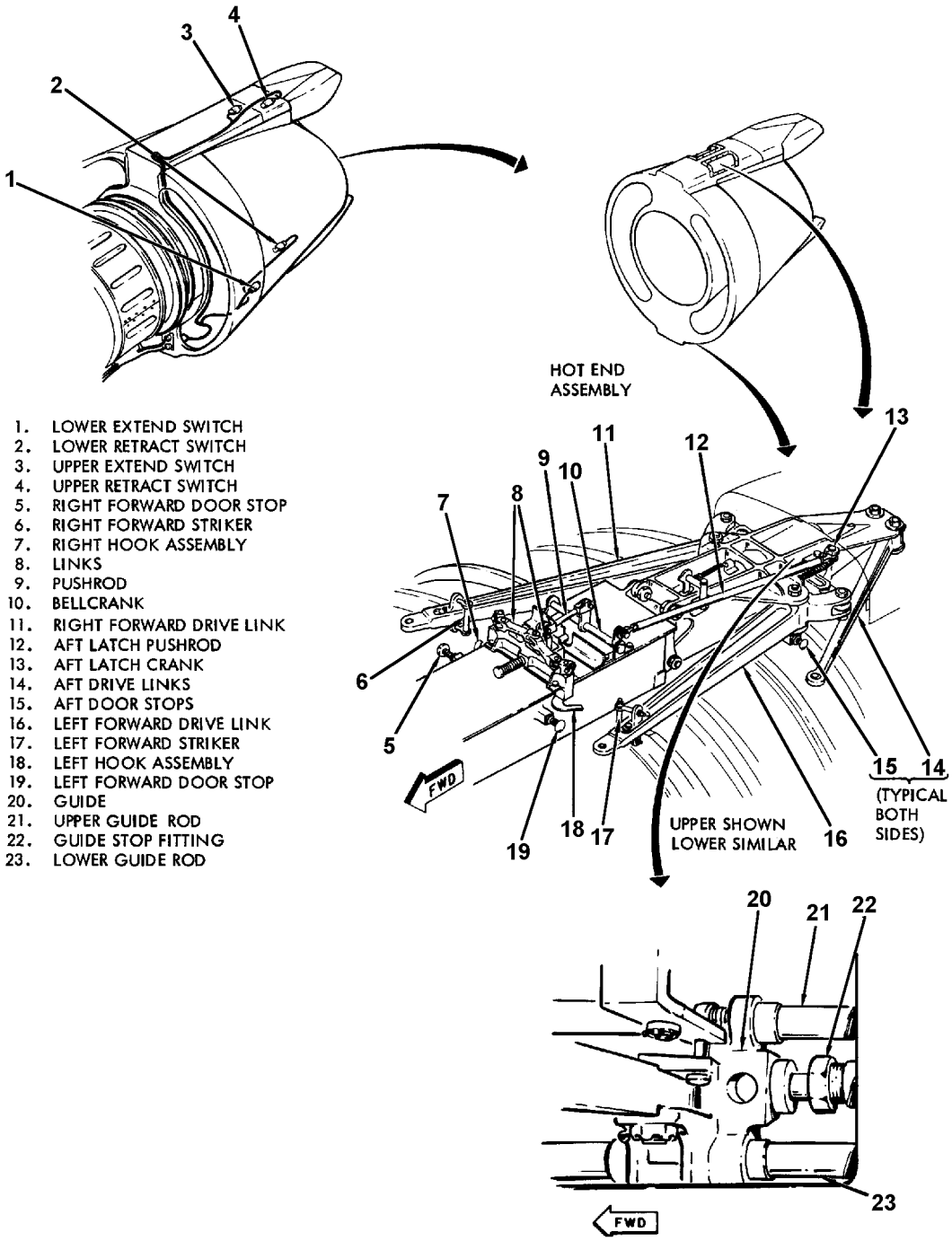

Thrust Reverser Actuating Mechanism and Switches

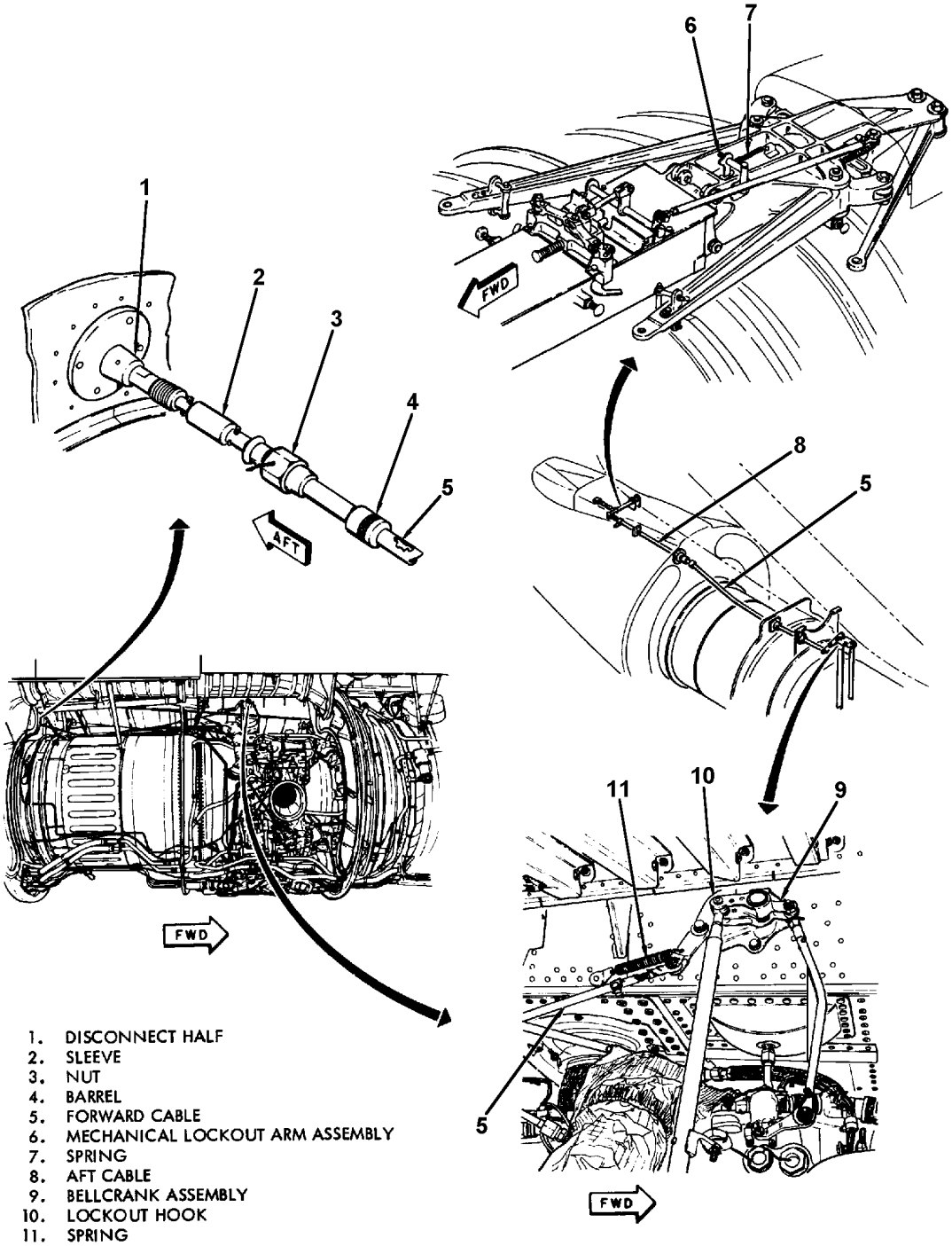

1. DISCONNECT HALF
2. SLEEVE
3. NUT
4. BARREL
5. FORWARD CABLE
6. MECHANICAL LOCKOUT ARM ASSEMBLY
7. SPRING
8. AFT CABLE
9. BELLCRANK ASSEMBLY
10. LOCKOUT HOOK
11. SPRING

Thrust Reverser Mechanical Lockout

NOTES

ENGINE OIL SYSTEM

General Description

The engine is lubricated by a high-pressure, self-contained, calibrated oil system. Lubrication is provided for the engine bearings, bearing seals, and accessory gearboxes. The oil system consists of three stages: pressure stage, scavenge stage, and breather stage. The pressure stage takes oil from an oil tank and pressurizes the oil for distribution to the various engine components. The scavenge stage collects oil after being used and pumps it back to the oil tank. A breather system is used to vent air overboard. Air from the compressor constantly leaks into all the bearing components making it necessary for the breather system. An indicating system is provided giving quantity, pressure, and temperature of the oil. The oil is cooled through an air-oil cooler and a fuel-oil cooler.

Oil System Operation

The oil system provides lubrication to internal engine bearings. Oil is routed to the bearings under pressure. A scavenge system picks up the lubricating oil and sends it back to an oil tank. A breather system vents compressor air leakage from bearing seals overboard. An oil tank is the beginning and ending place for the oil. Oil gravity flows from the saddle-type tank and enters the oil pump. The oil pump contains two gear-type elements, the pressure element, and scavenge element. Both elements are driven by the same shaft.

Oil is pressurized by the pressure element and directed to the oil filter. The filter removes any contaminants. If a pressure differential builds across the filter, a bypass valve opens, permitting oil to flow around the filter. A pressure relief valve keeps oil pressure between 35 and 60 psi. Oil passes through external tubes and internal passages to small wire-mesh filters before being directed to the bearings. Two indicators and two lights are used to monitor the oil pressure system. An oil pressure transmitter, downstream of the filter, senses oil pressure and sends the results to an OIL PRESS indicator. Next to the transmitter is an oil temperature bulb. The bulb's resistance changes with oil temperature and is measured by the OIL TEMP indicator. Two pressure switches control a LOW OIL PRESSURE light. One switch senses oil pressure and provides a ground when pressure drops below a set value. The other switch provides a ground when a set differential pressure develops across the oil filter. Either switch will cause the light to come on when actuated. A LOW OIL QTY light monitors the usable oil remaining in the oil tank. A float-type switch in the tank provides a ground for the light.

After oil lubricates the bearings, three scavenge pumps return the oil to the main accessory gearbox. Another pump returns oil from one of the bearing compartments directly to the air-oil cooler. A fifth scavenge pump, which is the scavenge element of the oil pump, scavenges oil from the gearbox and directs it to the air-oil cooler. The radiator-type cooler transfers heat from the oil to the air. A thermostatic and pressure relief valve controls the flow of oil. During cool oil temperature, oil bypasses the air-oil cooler. As oil temperature increases, the valve closes allowing oil to flow through the cooler. The last item the oil flows through before re-entering the oil tank is the fuel-oil

cooler. The cooler is controlled similar to the air-oil cooler. The heat from the oil is transmitted to fuel instead of air. A breather system vents seal pressurization air overboard. A rotary breather separates heavy oil particles from the air before venting the air overboard.

Oil System Pressure Components

The oil pressure system consists of an oil tank, oil pump, oil filter, and pressure relief valve.

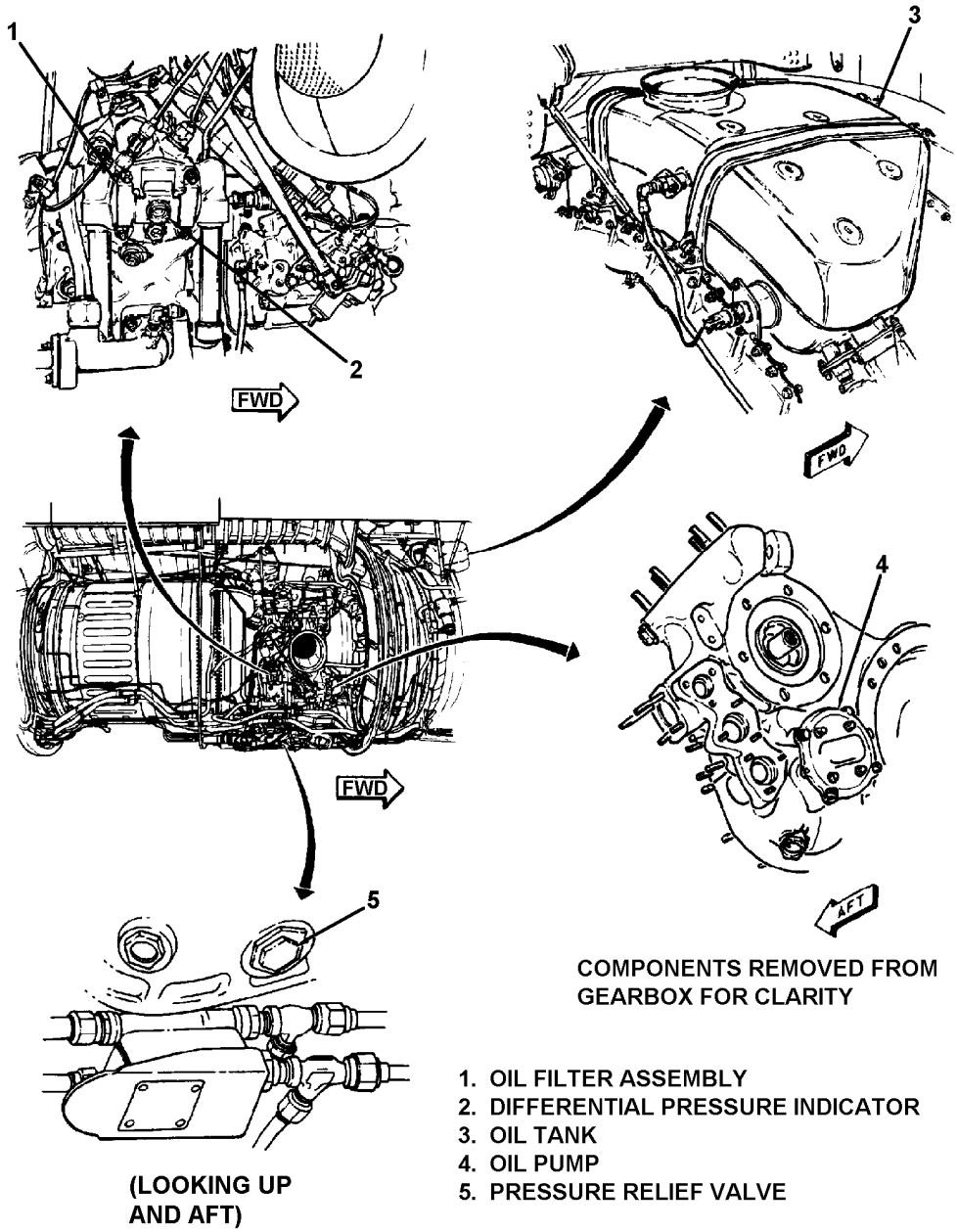

Oil System Pressure Components

Oil System Scavenge Components

The scavenge system picks up and returns oil to the oil tank. Five gear-type scavenge pumps pick up the oil and return it to the oil tank. The oil handling capacity of the combined scavenge pumps is approximately two times the output of the pressure pump. This ensures pressure to the bearings at all times. Three of these pumps scavenge oil from the No. 1, 2, 2-1/2, 3, and 6 bearing compartments and return oil to the main accessory gearbox. The fourth scavenges oil from the No. 4, 4-1/2, and 5 bearing compartments and returns oil directly to the oil coolers. The fifth pump, located in the gearbox, returns oil to the oil tank. Before reaching the oil tank, oil passes through an air-oil cooler and fuel-oil cooler.

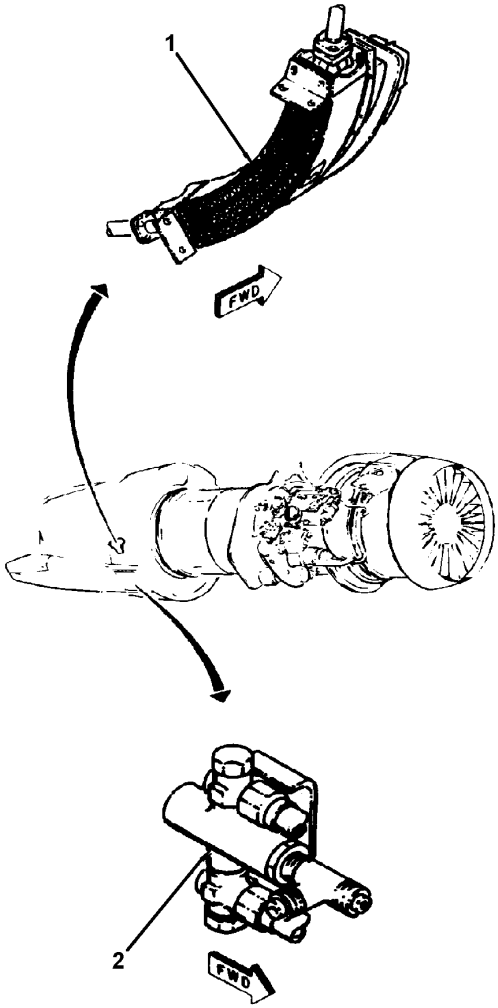

1. AIR-OIL COOLER
2. AIR-OIL COOLER THERMOSTATIC AND PRESSURE RELIEF VALVE

Oil System Scavenge Components

Oil Breather System

During engine operation, compressor air constantly leaks across the bearing seals into all bearing compartments. Pressurization in the vent system is provided by the seal leakage. The entire oil system is vented to the atmosphere. Air spaces in the oil tank, gearbox, and each bearing compartment are connected by tubing. These spaces are vented through external tubing and inner passages to a breather chamber. The breather chamber is formed by the compressor intermediate case annulus. Air is vented from the breather chamber to a cavity in the main accessory gearbox. The gearbox is vented overboard by the rotary breather, and through the breather housing. Air entering the gearbox is mixed with oil. To prevent oil being dumped overboard, a rotary breather removes the oil from the air. The rotary breather is driven by gears inside the gearbox. The rotary breather rotates at high speed, separating the heavy oil particles from the air. The oil drains back into the gearbox and scavenged back to the oil tank. Air is vented through the breather housing and overboard.

Oil System Indication Components

To correctly monitor the oil system, each engine has a LOW OIL QTY light, LOW OIL PRESSURE light, OIL PRESS indicator, and OIL TEMP indicator.

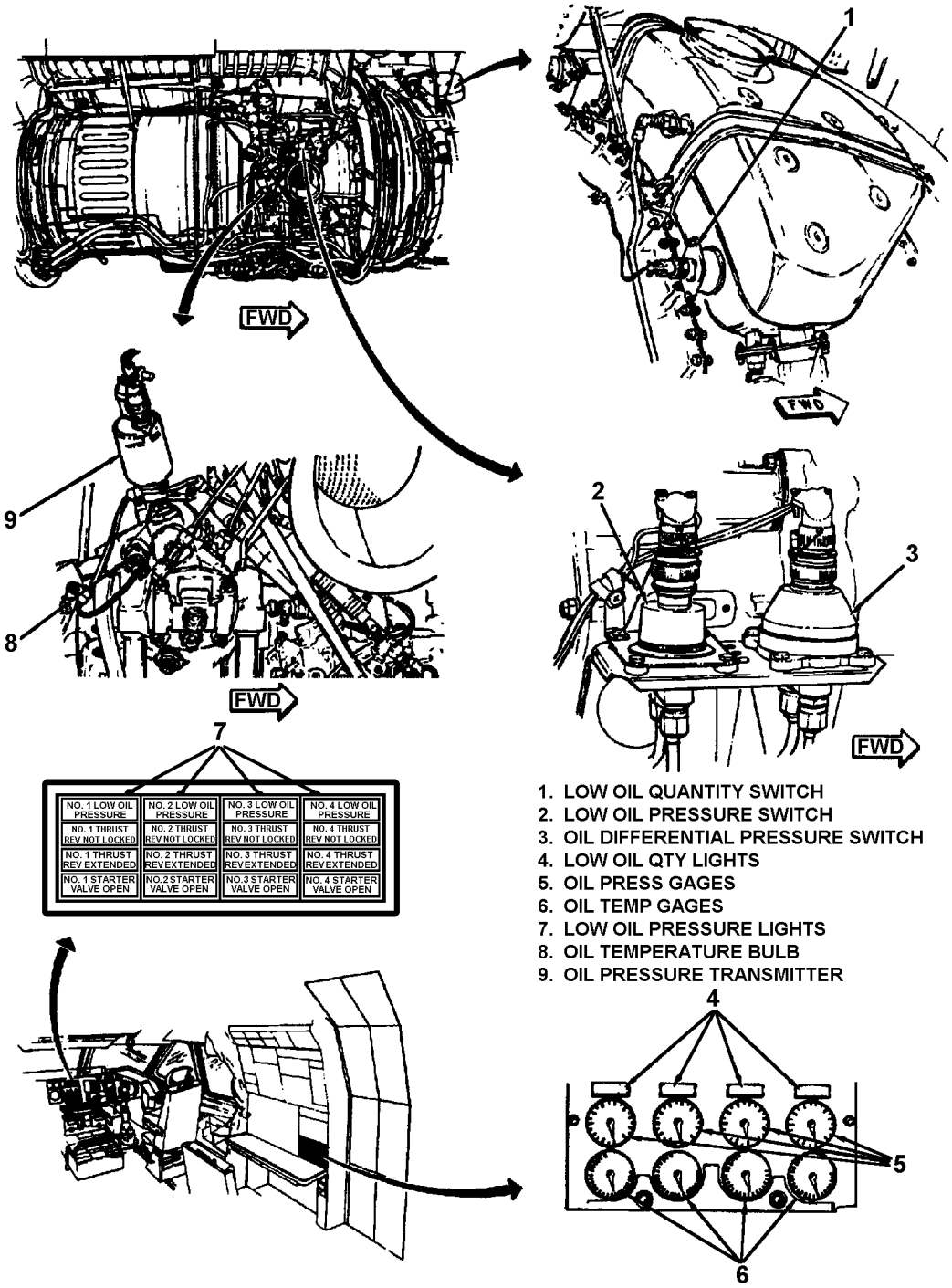

Oil System Indicating Components

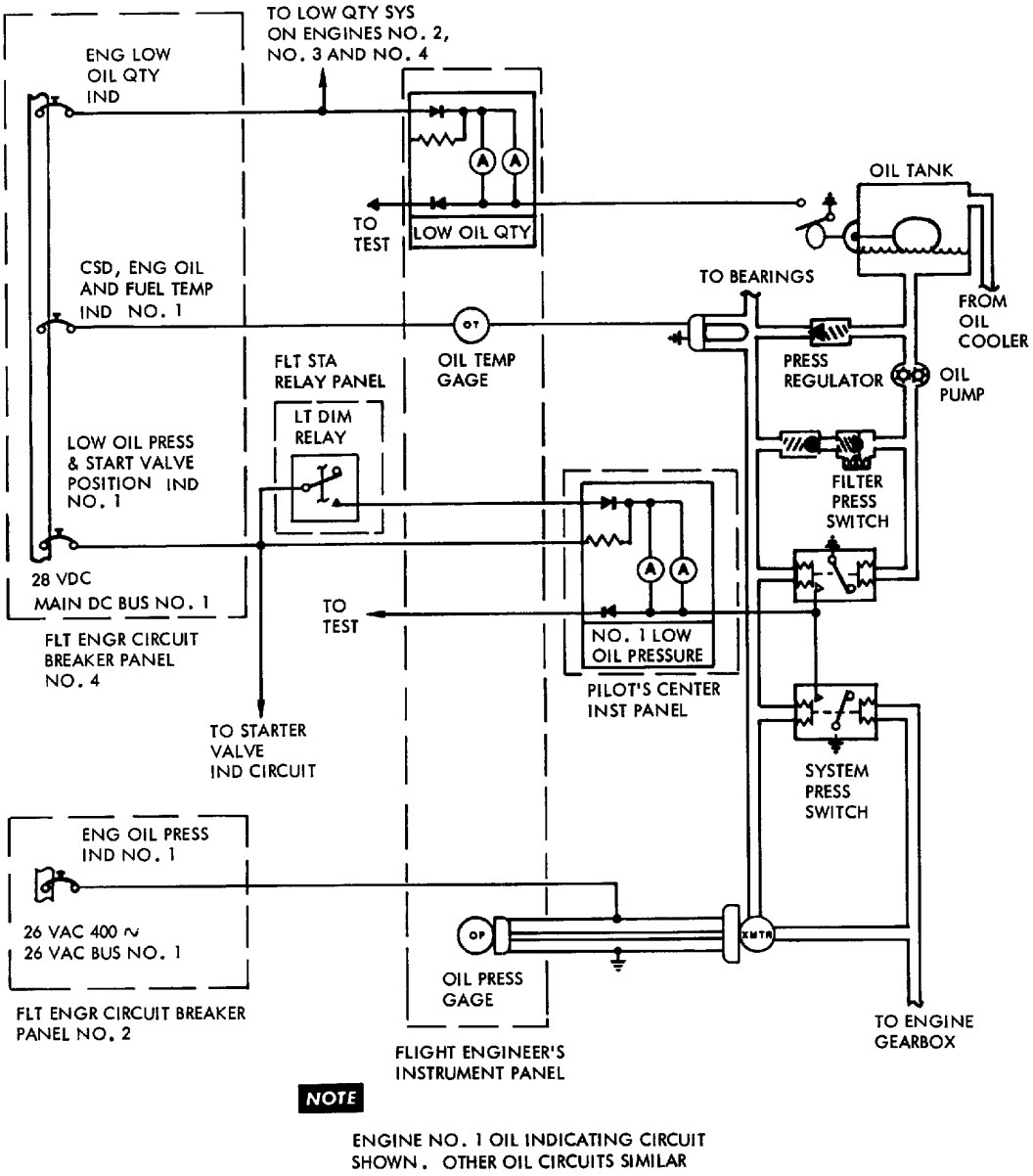

NOTE

ENGINE NO. 1 OIL INDICATING CIRCUIT
SHOWN. OTHER OIL CIRCUITS SIMILAR

Oil System Indicating Schematic Diagram

ENGINE STARTING SYSTEM

General Description

Each engine is equipped with a self-contained starting system. The airplane contains bleed air ducts to interconnect engines, auxiliary power unit (APU), and an external connection to the starter system. A control valve regulates the air supply during the starting cycle. It also shuts off the air supply to the starter. The starter receives air from the control valve and converts it to mechanical rotation. The starter is connected directly to the main accessory gearbox. Rotation of the starter causes the gearbox to rotate, which rotates the N2 compressor. The starter helps accelerate the engine during the starting cycle. The starter system is controlled by a STARTER button. The button remains pushed in until the engine accelerates to approximately 43 percent. A centrifugal switch in the starter breaks a ground circuit to the STARTER button holding coil. Whenever the starter control valve is open, a STARTER VALVE OPEN light on the center instrument panel comes on.

Starting System Components

The starting system consists of a STARTER button, starter control valve, and starter.

Starting System Operation

When the STARTER button is depressed, 28 VDC is supplied through the switch to the starter control valve. Power is also supplied through the STARTER button contacts to its own holding coil and light. The ground for the starter control valve and holding coil is supplied through the starter cutout switch. With power and ground, the starter control valve opens and the holding coil keeps the STARTER button depressed. When the starter control valve opens, the indicator switch closes providing a ground to turn on the STARTER VALVE OPEN light. As the control valve continues to open and airflow increases, the starter rotates and accelerates the engine. The fuel and ignition systems are energized at 15 percent RPM by placing the FUEL AND START IGNITION switch to RUN. At an engine N2 speed of approximately 43 percent, the starter cutout switch is actuated by centrifugal force. The ground circuit to the control valve and holding coil is opened. The starter control valve begins to close and the STARTER button pops out. As the starter valve closes, air supply to the starter decreases. The starter turbine slows down coming to a stop when the valve is fully closed. When the valve reaches the full closed position, the indicator switch opens causing the STARTER VALVE OPEN light to go off. As the engine continues to accelerate above starter cutout speed, the starter clutch disengages and the output side of the clutch, which is splined to the engine, continues to rotate with the engine. A start using crossbleed air from another engine is the same as a start using the APU, except that less time is required. The starter inlet pressures and temperatures are higher giving greater pneumatic power. External air sources may be used for starting the first engine. After the external air and electrical power sources have been connected to the airplane, the starting procedure is the same as starting with the APU.

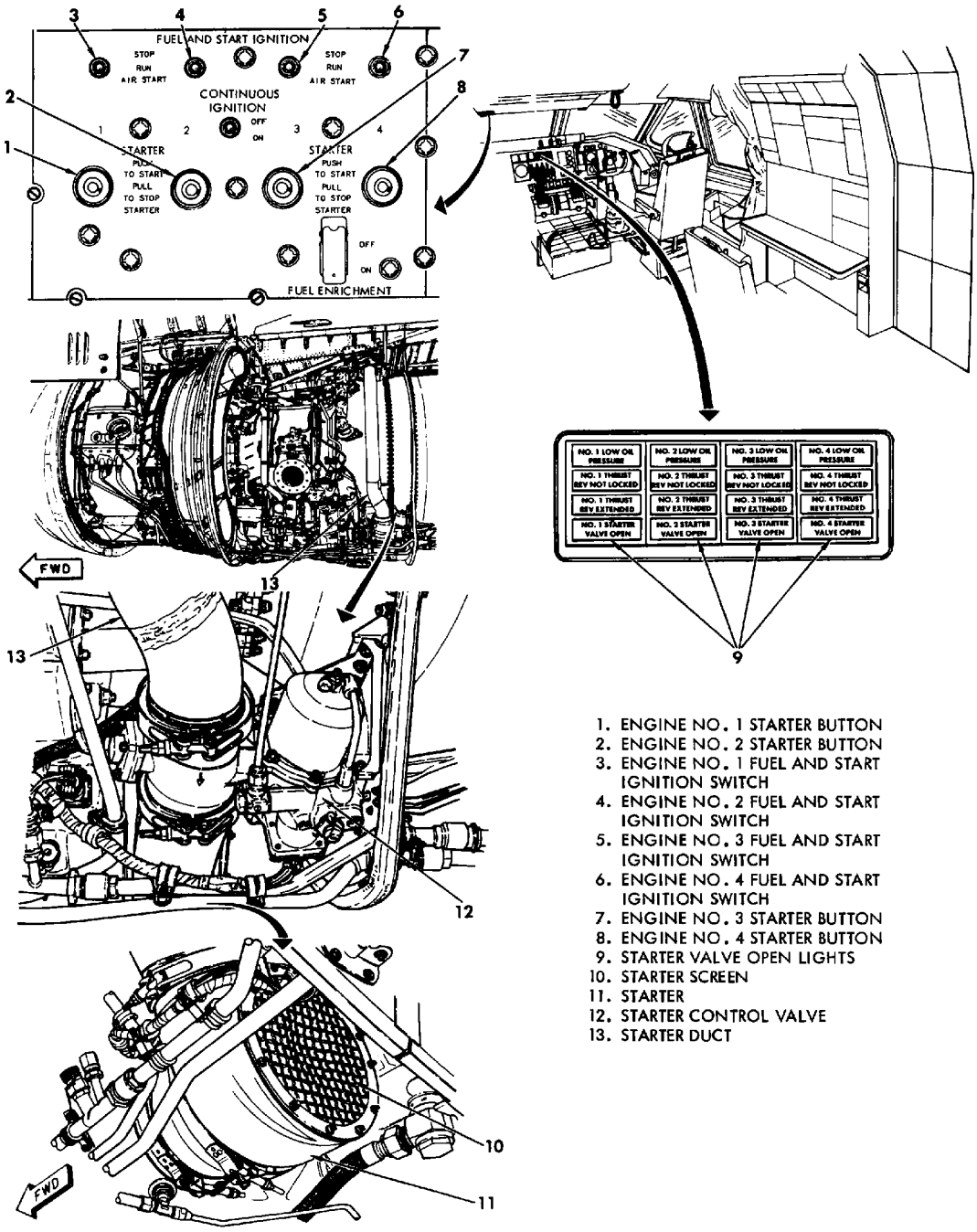

1. ENGINE NO. 1 STARTER BUTTON
2. ENGINE NO. 2 STARTER BUTTON
3. ENGINE NO. 1 FUEL AND START IGNITION SWITCH
4. ENGINE NO. 2 FUEL AND START IGNITION SWITCH
5. ENGINE NO. 3 FUEL AND START IGNITION SWITCH
6. ENGINE NO. 4 FUEL AND START IGNITION SWITCH
7. ENGINE NO. 3 STARTER BUTTON
8. ENGINE NO. 4 STARTER BUTTON
9. STARTER VALVE OPEN LIGHTS
10. STARTER SCREEN
11. STARTER
12. STARTER CONTROL VALVE
13. STARTER DUCT

Starting System Components

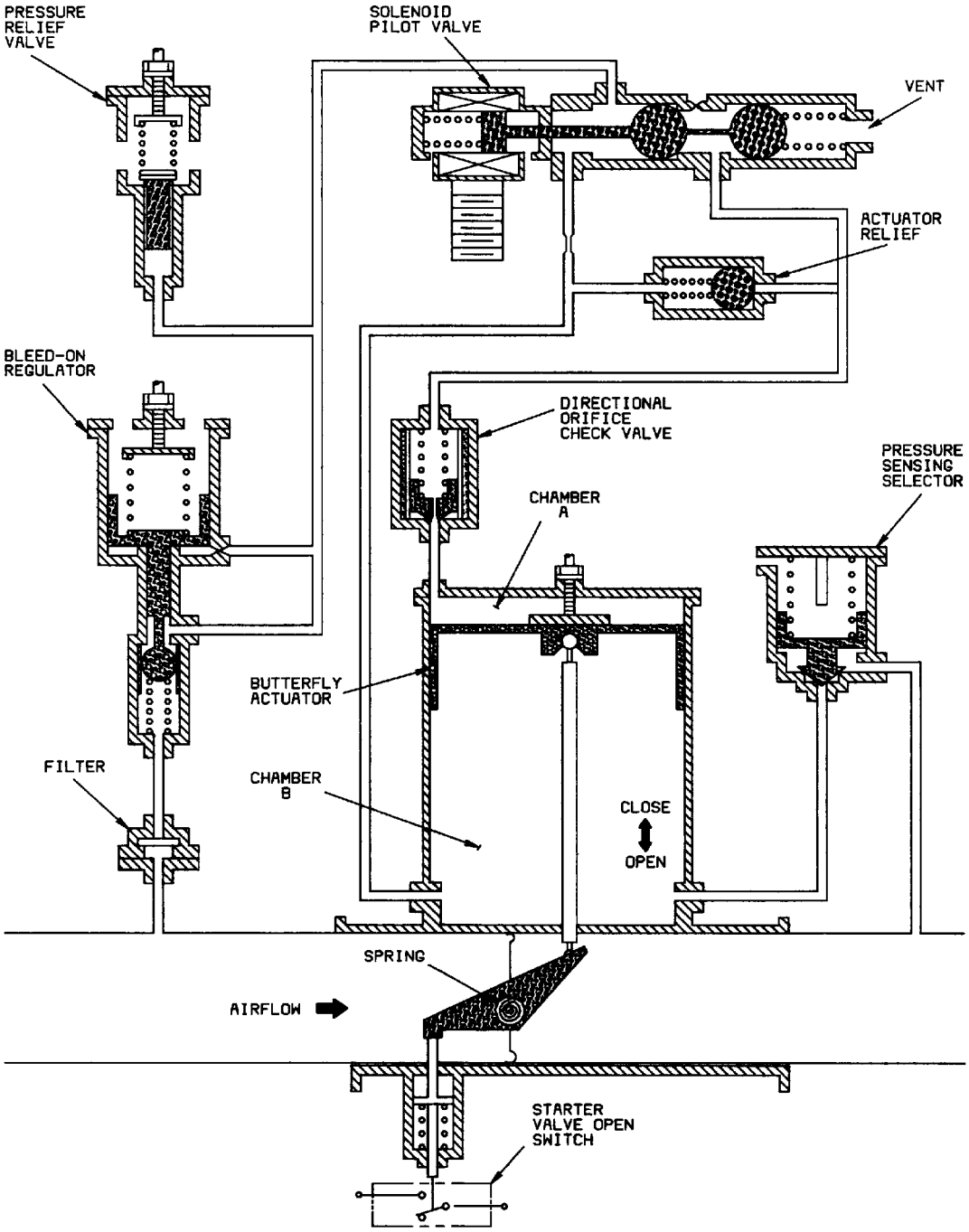

Starter Control Valve Schematic Diagram

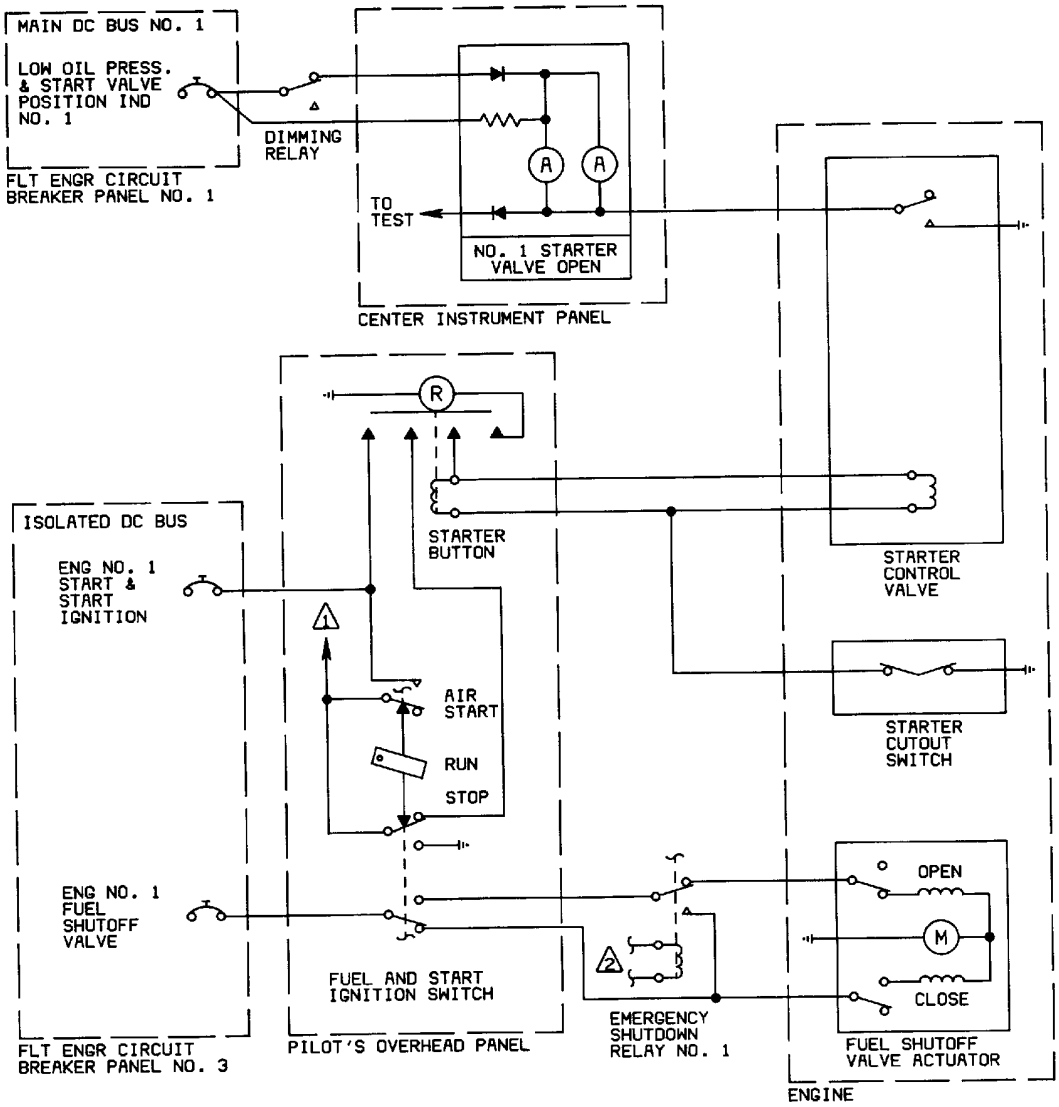

NOTE

1. TO 20 JOULE IGNITION EXCITER.
2. SEE SECTION 6 FOR CONTROL OF EMERGENCY SHUTDOWN RELAY NO. 1.
3. ENGINE NO. 1 CIRCUIT SHOWN. OTHER ENGINE CIRCUITS SIMILAR.

Starting System Schematic Diagram

GLOSSARY OF ABBREVIATIONS/ACRONYMS

The following list of terms was taken from all aircraft handbooks presently in use. Not all the terms in this list will pertain to your particular weapon system.

A

A/A . . . . . Air-to-Air

ABS. . . . . Asymmetry Brake System (Flaps And Slats)

AC; ac. . . . . Alternating Current

ACC . . . . . Avionics Computer Control

ACFT . . . . . Aircraft

ACM . . . . . Air Combat Mode

ACP . . . . . Automatic Communication Processor

AC&PS . . . . . Air Conditioning & Pressurization System

ACU . . . . . Avionics Control Unit

ADF. . . . . Automatic Direction Finder

ADG . . . . . Accessory Drive Gearbox

ADI . . . . . Attitude Director Indicator

ADS . . . . . Air Data Sensor; Air Delivery System

ADSP . . . . . Analog Data Signal Processor

AFCS . . . . . Automatic Flight Control System

AFGS . . . . . Automatic Flight Guidance System

AFSATCOM . . Air Force Satellite Communications

AGE . . . . . Aerospace Ground Equipment

AGM. . . . . Air-to-Ground Missile

AHRS . . . . . Attitude Heading Reference System

AIL . . . . . Aileron

AIL STA . . . . . Aileron Station

AILA . . . . . Airborne Instrument Landing Approach

AIMS . . . . . Air Traffic Control Radar System

ALT . . . . . Altitude; Altimeter; Alternate; Alternator

ALDCS . . . . . Air Lift Distrubution Control System

AM . . . . . Amplitude Modulation

AMI. . . . . Airspeed Mach Indicator

AMPL . . . . . Amplifier

AMUX. . . . . AvionicsMultiplex

ANT . . . . . Antenna

AOA . . . . . Angle-of-Attack

AOAT . . . . . Angle-of-Attack Transmitter

AP . . . . . Auto Pilot; Array Processor

APT . . . . . Automatic Pitch Trim

APU . . . . . Auxiliary Power Unit

ATM . . . . . Air Turbine Motor

AR . . . . . Air Refuel

ARB . . . . . Aerial Refuel Boom

ARO . . . . . Aerial Refueling Operator

ASSY . . . . . Assembly

ATCS . . . . . Automatic Thrust Control System

ATF . . . . . Automatic Terrain Following

ATS . . . . . Air Turbine Starter; Auto Throttle System

ATT . . . . . Attitude

AU . . . . . Accelerometer Unit

Auto. . . . . Automatic

AUX. . . . . Auxiliary

AVVI . . . . . Altitude Vertical Velocity Indicator

B

BAL . . . . . Balance

BALU. . . . . Bus Allocation Logic Unit

BARO . . . . . Barometric

BCN . . . . . Beacon

BCU . . . . . Bus Control Unit

BIT. . . . . Built-in Test

BITE . . . . . Built-in Test Equipment

BL . . . . . Buttock Line

BPP. . . . . Bus Protection Panel

BRG . . . . . Bearing

BRT. . . . . Bright; Brightness

BSC. . . . . Beam Steering Controller

BTB . . . . . Bus Tie Breaker

BTC. . . . . Bus Tie Contacter

BU . . . . . Battery unit

BW . . . . . Bandwidth

BPO . . . . . Basic Post Flight

C

C. . . . . Celsius; Centigrade

CADC . . . . . Central Air Data Computer

CAL . . . . . Calibration

CAM . . . . . Content-Addressable Memory

CAMS. . . . . Core Automated Maintenance System

CAP . . . . . Capture

CARA . . . . . Combined Altitude Radar Altimeter

CAS . . . . . Computed Airspeed

CASS . . . . . Centralized Aircraft Servicing System

CAST . . . . . Command Aircraft Systems Training

CB . . . . . Circuit Breaker; Bromocloromethane

CC . . . . . Cubic Centimeter

CCP . . . . . Computer Control Panel

CCU . . . . . Central Control Unit; Compass Compensation Unit

CCW. . . . . Counter-Clockwise

CDI . . . . . Course Deviation Indicator

CDIU. . . . . Controls and Displays Interface Unit

CDPIR . . . . . Crash Data Position Indicator Recorder

CDU . . . . . Controls and Displays Unit

CG . . . . . Center of Gravity

CIT . . . . . Compressor Inlet Temperature

CITS . . . . . Central Intergrated Test System

CLR. . . . . Clear

CMD . . . . . Command

COMBS . . . . . Contractor Operated and Maintained Base Supply

COMP. . . . . Compass

CONT . . . . . Control; Continuious

CO2 . . . . . Carbon Dioxide

CP. . . . . Command Post

CPLR . . . . . Coupler

CPS . . . . . Cycles Per Second (Hertz)

CPU . . . . . Central Processing Unit

C/RAD. . . . . Command Radio

CRS . . . . . Course

CRT . . . . . Cathode Ray Tube

CSD . . . . . Constant Speed Drive

CTC . . . . . Communication and Traffic Control

CU. . . . . Cubic

CW . . . . . Clockwise; Continuious Wave

CWS . . . . . Control Wheel Steering

D

DB. . . . . Decibel(s)

DC; dc. . . . . Direct Current

DCU . . . . . Display Control Unit

DEST . . . . . Destination

DF . . . . . Direction Finder

DFDR. . . . . Digital Flight Data Recorder

DIA. . . . . Diameter

DICU . . . . . Display Interface Control Unit

DIFF. . . . . Differential

DME. . . . . Distance Measuring Equipment

DP . . . . . Differential Protection

E

EBADS. . . . . Engine Bleed Air Distribution System

ECM. . . . . Electronic Countermeasures

ECS . . . . . Environmental Control System

EGT . . . . . Exhaust Gas Temperature

EGCU. . . . . Emergency Generator Control Unit

ELEV . . . . . Elevator

ELEV STA . . . Elevator Station

EMER. . . . . Emergency

EPD . . . . . Electrical Power Distribrution

EPR . . . . . Engine Pressure Ratio

ET . . . . . Elapsed Time

ETA . . . . . Estimated Time of Arrival

EXT . . . . . External

F

F . . . . . Fahrenheit

F&LC. . . . . Frequency and Load Controller

FCI . . . . . Flight Command Indicator

FCP. . . . . Flight Computer Program

FD . . . . . Flight Director

FDC. . . . . Flight Director Computer

FDS. . . . . Flight Director System

FL . . . . . Flight Level

FM. . . . . Frequency Modulation

FMC . . . . . Fully Mission Capeable

FMP . . . . . Fuel Management Panel

FOL. . . . . Foward Operating Location

FREQ . . . . . Frequency

FR BM STA. . . Front Beam Station

FRZE. . . . . Freeze

FS . . . . . Fuselage Station

FSAS. . . . . Fuel Savings Advisory System

FSS. . . . . Fire Suppresion System

FT; ft . . . . . Foot; Feet

FWD . . . . . Forward

G

G . . . . . Unit of Gravity; Gram(s)

GA. . . . . General Aircraft

GAAS . . . . . Go Around Attitude System

GCU . . . . . Generator Control Unit

GHz . . . . . Gigahertz

GMB. . . . . Ground Marker Beacon

GMT . . . . . Greenwich Mean Time

GOX . . . . . Gaseous Oxygen

GPM. . . . . Gallons Per Minute

GPWS . . . . . Ground Proximity Warning System

GS . . . . . Glideslope; Groundspeed

GSE . . . . . Ground Support Equipment

GSU . . . . . Ground Servicing Unit (LN2 Servicing Truck)

GYRO. . . . . Gyroscope

H

HDG . . . . . Heading

HF. . . . . High Frequency

HG . . . . . Inches of Mercury

HOR . . . . . Horizontal

HPO . . . . . Hourly Post Flight

HSI . . . . . Horizontal Situation Indicator

HSC . . . . . Home Station Check

HZ. . . . . Hertz

I

IAS . . . . . Indicated Airspeed

ICS . . . . . Intercom System

IDENT. . . . . Identification of Position (IFF)

IF . . . . . Intermediate Frequency

IFF . . . . . Identification Friend or Foe

IFR . . . . . Inflight Refuel

IGV . . . . . Inlet Guide Vane

ILS . . . . . Instrument Landing System

IN . . . . . Inches

INBRD. . . . . Inboard

IND . . . . . Indicator

INS . . . . . Inertial Navigation Syatem

INST . . . . . Instrument

INT . . . . . Internal; Intensity

INTER. . . . . Internal

INU . . . . . Inertial Navigation Unit

ISOL . . . . . Isolation

J

JG . . . . . Job Guide

JOAP . . . . . Joint Oil Analysis Program

JTSN. . . . . Jettison

K

KHz . . . . . Kilohertz

Kv . . . . . Kilovolts

KVA. . . . . Kilovolt/Ampere

KW . . . . . Kilowatt

L

LAT . . . . . Latitude

LB . . . . . Pounds

LBL . . . . . Left Buttock Line

LH . . . . . Left Hand

LIM . . . . . Limit

LIN . . . . . Linear

LN_2. . . . . Liquid Nitrogen

LOC . . . . . Localizer

LOG . . . . . Logarithmic

LOX . . . . . Liquid Oxygen

LRU . . . . . Line Replaceable Unit

LSB . . . . . Lower Sideband

LVDT . . . . . Linear Variable Differential Transformer

M

MAC . . . . . Mean Aerodynamic Chord

MADAR . . . . . Malfunction Detection Analysis and Recording

MAG . . . . . Magnetic

MALF . . . . . Malfunction

MAN . . . . . Manual

MAX . . . . . Maximum

MHz . . . . . Megahertz

MIC . . . . . Microphone

MILSPEC . . . . Military Specification

MKR . . . . . Marker; Marker Beacon

MLG . . . . . Main Landing Gear

MM . . . . . Millimeter

MMR . . . . . Multi-Mode Radar

MOB. . . . . Maintenance Operating Base

MOI . . . . . Maintenance Operating Instruction

MON. . . . . Monitor

MPH . . . . . Miles Per Hour

MS . . . . . Maintenance Support

MSG. . . . . Message

MUX . . . . . Multiplexer

MWCS. . . . . Master Warning and Caution

N

NAV. . . . . Navigator; Navigation

N_C . . . . . Core Engine Speed

N_F . . . . . Fan Engine Speed

NICAD. . . . . Nickel-Cadmium

NLG. . . . . Nose Landing Gear

NM. . . . . Nautical Miles

NO. . . . . Number

NORM. . . . . Normal

NWS . . . . . Nose Wheel Steering

NSN . . . . . National Stock Number

O

OPER . . . . . Operate

OSE . . . . . Operational Support Equipment

OVRD . . . . . Override

OUTBRD. . . . . Outboard

P

PA . . . . . Public Address

PACS . . . . . Pilot Assist Cable System

PCA. . . . . Power Control Assembly

P&D. . . . . Pressurization and Dump

PGM . . . . . Program

POS . . . . . Position

PPH. . . . . Pounds Per Hour

PP STA . . . . . Power Plant Station

PP WL. . . . . Power Plant Water Line

PS. . . . . Power Supply

PSF . . . . . Pounds Per Square Foot

PSI . . . . . Pounds Per Square Inch

PSIA . . . . . Pounds Per Square Inch (Absolute)

PSID. . . . . Pounds Per Square Inch (Differental)

PSIG. . . . . Pounds Per Square Inch (Guage)

PTO . . . . . Power Take off (ADG)

PTT. . . . . Press-To-Test

PTU . . . . . Power Transfer Unit

PWR. . . . . Power

Q

QAD . . . . . Quick Attach-Detach

QD . . . . . Quick Disconnect

QEC . . . . . Quick Engine Change

QTY . . . . . Quanity

QUAL . . . . . Quality

R

RA . . . . . Radar Altimeter

RADAR. . . . . Radio Detection And Ranging

RAI . . . . . Radar Altimeter Indicator

RAT . . . . . Ram Air Turbine

RBL . . . . . Rear Buttock Line

RCVR. . . . . Receiver

RDR . . . . . Radar

REC . . . . . Receive

REL . . . . . Relative

REV . . . . . Reverse

RF. . . . . Radio Frequency

RG . . . . . Range

RH. . . . . Right Hand

RPM . . . . . Revolutions Per Minute

RT. . . . . Receiver Transmitter

RTN . . . . . Return

RTV. . . . . Rubber Temperature

RUD . . . . . Rudder

S

SADI . . . . . Standby Attitude Director Indicator

SAR . . . . . Signal Acquistion Remote Unit

SASS . . . . . Stability Augmentation Sub-System

SATCOM . . . . Sattellite Communication

SCAS . . . . . Stability & Control Augmentation System

SCM . . . . . Space Cargo Modification

SE. . . . . Support Equipment

SLV. . . . . Slave

SMK . . . . . Special Mission Kit

SOAP . . . . . Spectrometric Oil Analysis Program

SPOT . . . . . Spotlight

SPR . . . . . Single Point Refuel (Receptacle)

SQ; SQL . . . . . Squelch

SRU . . . . . Shop Replaceable Unit

STAB . . . . . Stabilizer; Stabalized

STBY . . . . . Standby

SYNC. . . . . Synchronization

T

TACAN. . . . . Tactical Air Navigation

TAS . . . . . True Air Speed

TAT . . . . . Total Air Temperature

TCTO . . . . . Time Compliance Technical Order

TD . . . . . Time Delay

TEMP. . . . . Temperature

TF. . . . . Terrain Following

TFR . . . . . Terrain Following Radar

TH . . . . . True Heading

T.O. . . . . Technical Order

T/R . . . . . Transmitt/Receive

TR . . . . . Transformer Rectifier; Thrust Reverser

TRT . . . . . Takeoff Thrust

U

UC . . . . . Upper Corner

UHF . . . . . Ultra-High Frequency

USB . . . . . Upper Sideband

V

VAC; vac . . . . Volts Alternating Current

VDC; vdc . . . . Volts Direct Current

VHF . . . . . Very High Frequency

VOL . . . . . Volume

VOR . . . . . VHF Omnirange; Visual Omnirange; Varible Omnirange

VSFI . . . . . Vertical Scale Flight Indicator

VSI . . . . . Vertical Scale Indicator

VSV. . . . . Variable Stator Vane

W

WD . . . . . Weather Detection

WOW . . . . . Weight On Wheels

WS . . . . . Wing Sweep

WL . . . . . Water Line

X

XHEAD. . . . . Crosshead

XMIT. . . . . Transmit

XMTR . . . . . Transmitter